CORROSION RESISTANCE CHART 耐藥品性一覽表

CHEMICAL NAME 藥品名	CONCEN-TRATION % 濃度	TEMPER-ATE ℃ 溫度	BODY MATERIAL 泵浦本體材質			SEAL MATERIAL 軸封材質			RUBBER MATENICL 橡膠材質		
			FRPP	CFRPP	PVDF	Ceramic	Carbon	Sic	NBR	EPT	VITON
H_2SO_4 Sulfuric acid 硫酸 H_2SO_4	30	40	●	●	●	●	●	●	●	●	●
		60	●	●	●	●	●	●		●	●
		80	●	●	●	●	●	●		○	●
		95			●	●	●	●			●
	60	40	●	●	●	●	●	●		●	●
		60	●	●	●	●	●	●		●	●
		80	○	○	●	●	●	●		○	●
		95			●			●			●
	98	40			●	●		●			●
		60			○	●		●			●
HCL Hydrochloric acid 鹽酸 HCL	15	40	●	●	●	○	●	●		●	●
		60	●	●	●	●	●	●		●	●
		80	○	○	●	●	●	●		○	●
	32	40	●	●	●	●	●	●		○	○
		60	●	●	●	●	●	●			
		80	○	○	●	●	●	●			
CrO_3 Chromic acid 鉻酸 CrO_3	20	40			●	●					●
		60			●	●					●
		80			●	●					○
HNO_3 Nitric acid 硝酸 HNO_3	20	40	●	●	●	●		●			●
		60	○	○	●	○		●			●
		80	○	○	●			●			●
	50	40	●	●	●			●			●
		60	○	○	●			●			●
H_3PO_4 Phosphoric acid 磷酸 H_3PO_4	25	40	●	●	●	●	●	●	●	●	●
		60	●	●	●	●	●	●	○	●	●
		80	○	○	●	●	●	●		○	●
	50	40	●	●	●	●	●	●		●	●
		60	●	●	●	●	●	●		○	●
		80	○	○	●	○	●	●		○	●
NaOC1 Sodium Hypochlorite 次氯酸納 NaOC1	10	40	○	○	●	●	○	●			●
		60	△	△	●	●	△	●			●
		80	×	△	●	●	×	●			●
CH_3COOH Acetic acid 醋酸 CH_3COOH	25	40	●	●	●	●	●	●			×
		60	●	●	●	●	●	●			×
		80	○	○	●	●	●	●			×
HF Hydrofluoric 氟酸 HF	25	40	×	●	●	×	○	●		●	●
		60	×	○	●	×	○	●		●	●
		80	×	×	●	×	○	●		○	●
$HCl+HNO_3$ Aguaregia 王水 $HCl+HNO_3$	3:1	40	×	×	●	●	×	●	×		○
		60	×	×	●	○	×	●	×		○
		80	×	×	●		×	●	×		●
H_2O_2 Hydrogen peroxide 雙氧水 H_2O_2	10	40	●	●	●	●	×	●	×		●
		60	○	○	●	●	×	●	×		●
		80	×	×	●	●	×	●	×		●
NaOH Caustic sode 燒氧化納 NaOH	45	40	●	●	●	△	●	●	●	●	○
		60	○	○	○	×	●	●	●	●	○
		80	○	○	×	×	●	●	○	○	×
$FeC1_3$ Ferric chloride 氯化鐵 $FeC1_3$		40	●	●	●	●	●	●	●	●	●
		60	●	●	●	●	●	●	○	●	●
		80	●	●	●	●	●	●		●	●
$Cu(CN)_2$ Copper Cyanide 氰化銅 $Cu(CN)_2$		40	●	●	●	△	●	●	●		●
		60	●	●	●	△	●	●	●		●
		80									
Zn Cl_2 氯化鋅 Zinc Chlorate		40	●	●	●	●	●	●	●		●
		60	●	●	●	●	●	●	●		●
$NiSO_4$ 硫酸鎳 Nickel Sulfate		40	●	●	●	●	●	●	●		●
		60	●	●	●	●	●	●	●		●

● EXCELLENT 優　○ GOOD 良　△ NOT GOOD 不良　× BAD 差　※ Specifications and other features are subject to change without notice.

※ 本公司對產品規格、設計特性均不斷研究改進，上述規格若有變更，恕不另行通知。

KUOBAO

日益電機股份有限公司 ZI YI ELECTRICAL ENGINEERING CO., LTD.
國寶開發實業有限公司 KUOBAO DEVELOPMENT AND ENT CO., LTD.
日勝科技有限公司 ZI SHENG TECHNOLOGICAL CO., LTD.

總公司：台灣省台中市烏日區大同五街31號
HEAD OFFICE: No.31, Datong 5th St., Wuri Dist., Taichung City 414, Taiwan
工廠：台灣省台中市烏日區五光路746巷28號
FACTORY: No.28, Ln. 746, Wuguang Rd., Wuri Dist., Taichung City 414, Taiwan
TEL: 886-4-23384262 / 23389123 / 23384675 / 23384142
FAX: 886-4-23375335

北區分公司：台灣省桃園縣龜山鄉忠義路三段199號D棟
TEL: 886-3-3270698 / 3270699 / 3270700
FAX: 886-3-3270697
E-mail: kuobao@so-net.net.tw
http://www.kuobao-intl.com.tw

本公司保留變更產品規格和資訊的權利，若有變更恕不另行通知。
Our Company has a right to modify the specifications and details change for our products. If change, without any notice.

日益電機（昆山）有限公司
昆山廠：江蘇省昆山市石牌鎮中華路北側
TEL: 0512-57688841~2　FAX: 0512-57688843

日益電機（東莞）有限公司
廣東廠：廣東省東莞市沙田鎮穗豐年村秋溢工業區
TEL: 0769-88681901~2 / 88687791~3 / 88806781~5
FAX: 0769-88681903

泉州服務站：福建省泉州市清濛工業區德泰路建龍花園8棟305室
TEL: 13960288782　FAX: 0595-22493903

溫嶺服務站：浙江省溫嶺市大溪鎮清溪花園20幢-單元102室
TEL: 13957733026　FAX: 0576-86180967

寧波服務站：浙江省寧波市滿海路2068弄2號1606室
TEL: 13805862662　FAX: 0574-87928653

天津服務站：天津市北辰區辰昌路3號延長線嘉山花園8幢2號門102室
TEL: 13820276566　FAX: 022-26679510

※版權所有 翻印必究※

KB SERIES／KCL SERIES

COAXIAL VACUUM ACID／ALKALINE-RESIST PUMP
CONNECTING AND SELF-PRIMING CHEMICAL PUMP

- ACID/ALKALINE-RESISTANT PUMP
- FILTERING MACHINE
- CHEMICAL MACHINERY
- VALVE ACCESSORIES

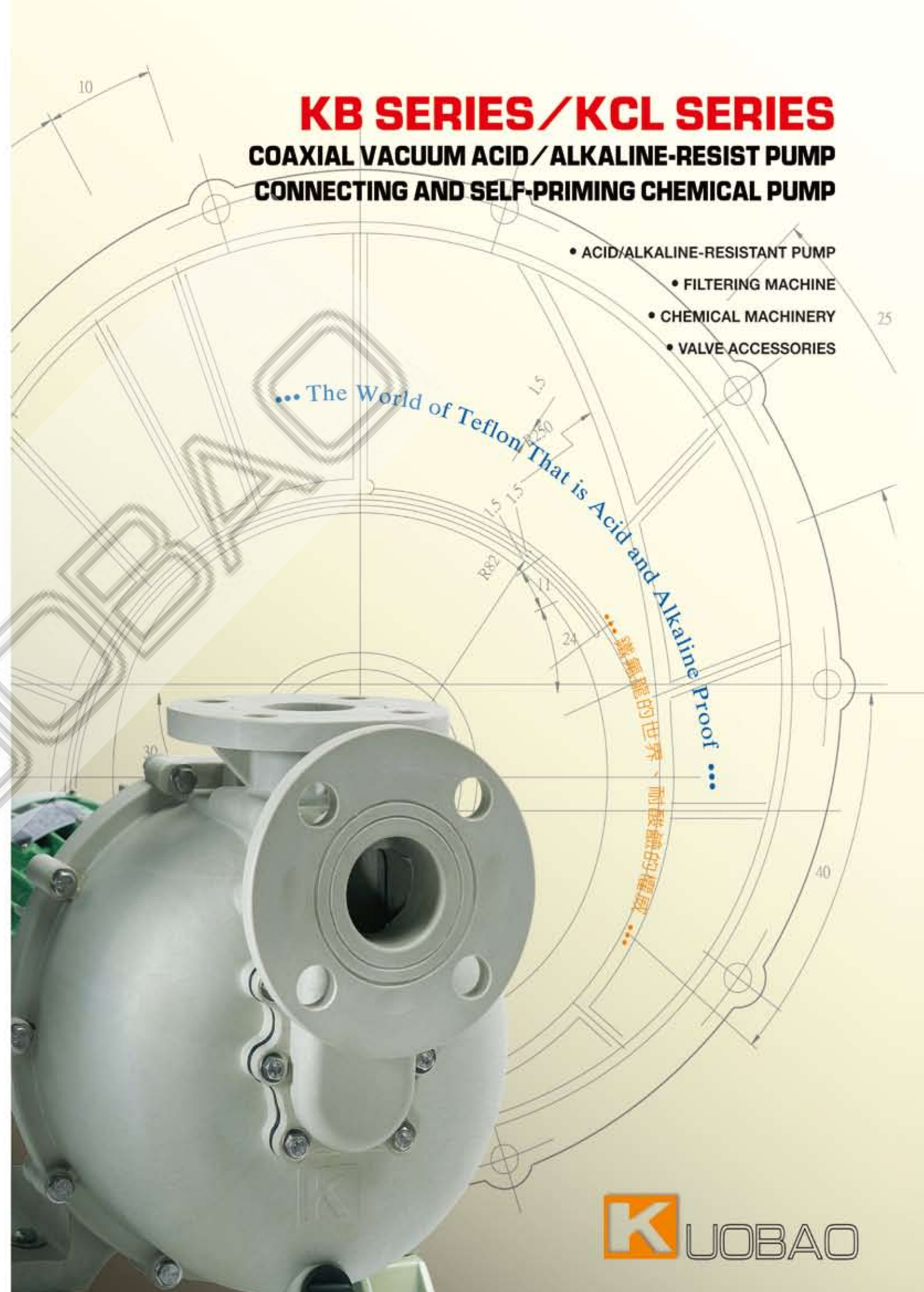

A combination of theorem and extensive experience.

A new level of pump performance.

Zi Yi ELECTRICAL ENGINEERING CO., LTD. is an expert in design, and manufacturing of a wide variety of acid/alkaline, and chemical resistant pump. Based on the years of total dedication to the research of pump performance and chemical composition, in corporation with the extensive experience and theoretical basis, enabled Zi Yi pumps to be a new standard. The outstanding engineering capability form Zi Yi will offer the innovative and dependable pumps to meet your requirements.....

融合理論與實務經驗。
展現泵浦性能新境界。

專業設計，開發製造各式耐酸鹼化學性泵浦之Zi Yi 電機股份有限公司，秉持多年來矢志鑽研泵浦特殊及化學成份，其卓越傑出的經驗與理論基礎，Zi Yi 公司為高級過濾機及泵浦之新典範。Zi Yi 公司渾厚的技術背景，將為您提供創新信賴的過濾機及泵浦。

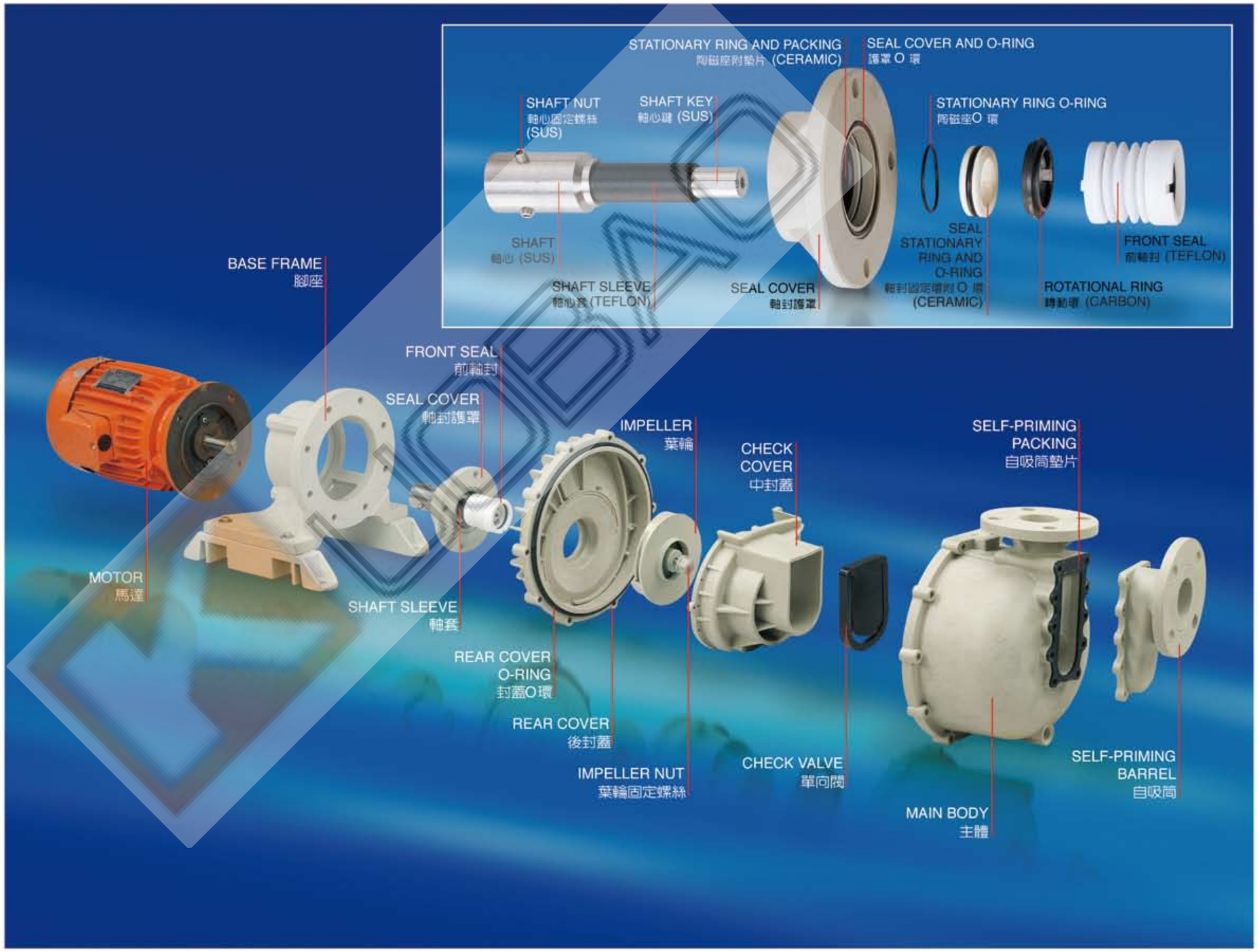

Superior quality of pump body.
One piece injected without welding.

超質泵浦主體結構，前所未有品質，一體射出成型無須焊接。

Unmatched Quality.
Unmatched Performance..

卓越品質。一般廠牌難與抗衡。

The pump body is manufactured from PVDF and CFRPP, FRPP. The body and upper self- priming barrel are one piece injected without welding, for leakfree performance.

泵浦主體採用 PVDF、CFRPP、FRPP材質，主體與上方自吸筒一體射出成型，絕無任何焊接點，所以絕不洩漏。

The front self priming barrel is manufactured from PVDF and CFRPP, FRPP. The flange and front self priming barrel are one piece injected wiithout welding that greatly upgrades durability, and ensures leakfree performance.

前自吸筒採 PVDF、CFRPP、FRPP材質，自吸筒與法蘭一體射出成型，絕無焊接，更強化本產品耐用性，所以絕不洩漏。

The conventional method is to weld the upper self priming barrel on the pump body, which may cause leakage at the welded position.
傳統式泵浦，主體與自吸筒採焊接方式，長時間使用焊接處容易造成洩漏情形。

The conventional method is to weld the flange on the front self priming barrel, that may cause leakage and poor durability, and seal damage due to dry running.
一般型，自吸筒與法蘭乃須焊接，耐用性欠佳，容易造成洩漏現象，以致產生入口空轉損害軸封。

POOR SELF PRIMING BARREL

- The self priming barrel can't be sealed with pump body. An additional screw shall be fitted in the inlet port for sealing purpose.
- In case of over-tightening of screw may cause glue on screw peeling off.
- If screw fall into the pump, it needs to dispatch the pump and reassemble.

設計不良之自吸筒

- 自吸筒無法與泵浦主體完全密合，必須在入水口內，加裝一根螺絲，以達完全密合之效果。
- 當螺絲旋轉過緊，可能造成螺絲上之膠套脫落。
- 組裝過程中，如螺絲掉入泵浦內，必須花費較多工時將泵浦重新拆開，取出螺絲重組。

KB SERIES 同軸自吸式耐酸鹼泵浦
COAXIAL VACUUM ACID／ALKALINE-RESIST PUMP

KCL SERIES 連接自吸式耐酸鹼泵浦
CONNECTING AND SELF-PRIMING CHEMICAL PUMP

KB / KCL	-	40	02	2	N	B	L	-	C	C	H
1		2	3	4	5	6	7		8	9	10

1

KB / KCL-TYPE
KB/KCL-MATERIAL FRPP
KBC/KCLC-MATERIAL CFRPP
KBP/KCLP-MATERIAL PVDF

機型編號
KB/KCL-泵浦材質 FRPP
KBC/KCLC-泵浦材質 CFRPP
KBP/KCLP-泵浦材質 PVDF

2

IN-OUTLET
40-1-1/2"
50-2"
75-3"

出入口徑

3

POWER
11-1 Ø 1/2HP
13-3 Ø 1/2HP
01-3 Ø 1HP
02-3 Ø 2HP
03-3 Ø 3HP
05-3 Ø 5HP
07-3 Ø 7.5HP
10-3 Ø 10HP

馬力

4

POLE
2-2P
4-4P

極數

5

RUBBER MATERIAL
N-NBR
E-EPT
V-VITON

橡膠材質

6

B-NON CHECK-VALVE
(INLET LOWER THAN LIQUID LEVEL)
A-WITH CHECK-VALVE
(INLET HIGHER THAN LIQUID LEVEL)
B-無單向閥（入口比液位低選用）
A-有單向閥（入口比液位高選用）

7

L-LOW HEAD
H-HIGH HEAD

L-低揚程
H-高揚程

8

STATIONARY RING
C-CERAMIC
S-SIC

固定環

9

ROTATIONAL RING
C-CARBON
S-SIC

轉動環

10

SPRING
H-HASTELLOY-C
S-SUS316

彈簧

KB SERIES TYPE

IN-OUTLET 出入口徑：1 1/2", 2"
HORSE POWER 動力： 1/2~3HP

IN-OUTLET 出入口徑：2"
HORSE POWER 動力： 5HP

IN-OUTLET 出入口徑：3"
HORSE POWER 動力： 5HP

KCL SERIES TYPE

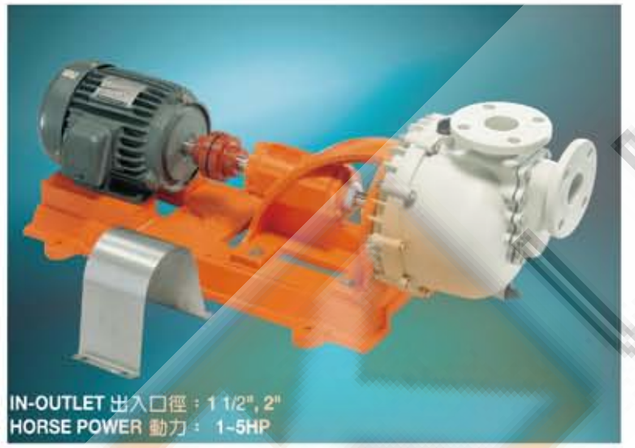
IN-OUTLET 出入口徑：1 1/2", 2"
HORSE POWER 動力： 1~5HP

IN-OUTLET 出入口徑：3"
HORSE POWER 動力： 5~10HP

PUMP APPLICATION EXAMPLES 泵浦典型應用例

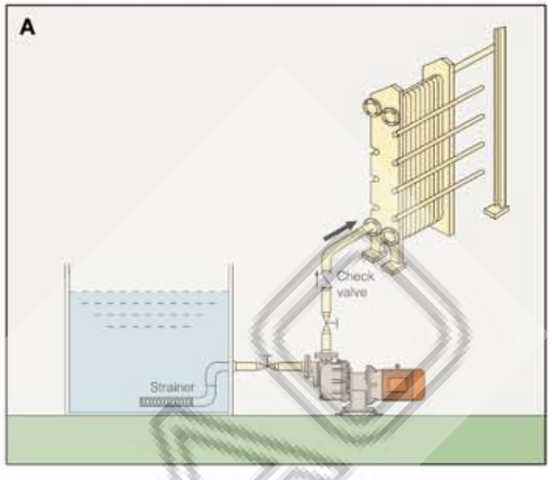

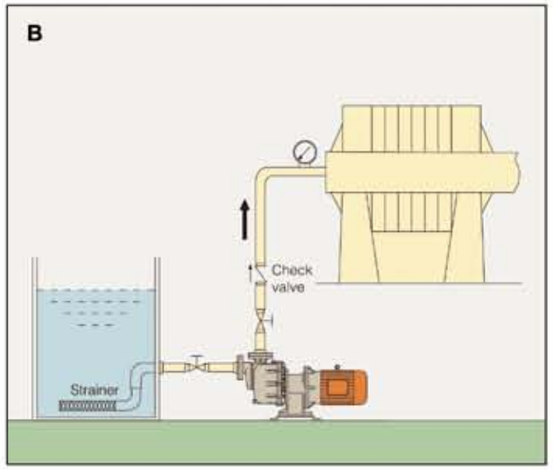

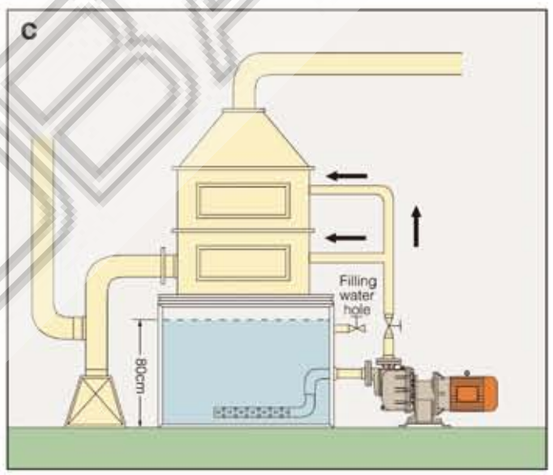

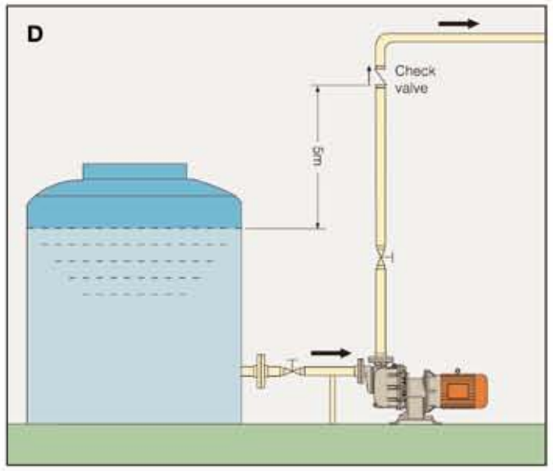

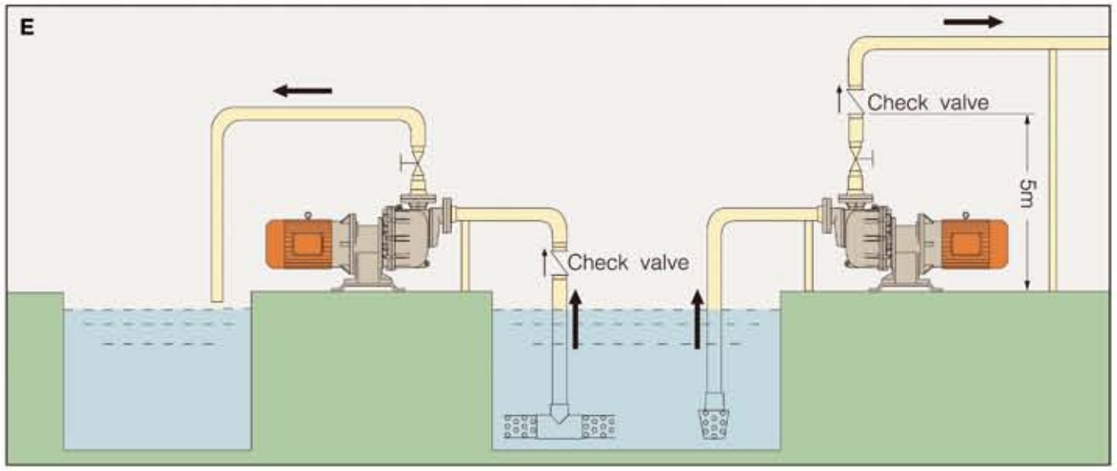

KB series

同軸自吸式耐酸鹼泵浦

COAXIAL VACUUM ACID／ALKALINE-RESIST PUMP

FEATURES:

- Specially designed cooling for shaft seal. The built-in teflon bellow seal features automatic cooling performancewithout use automatic cooling hose.
- Vaccum self priming design. Extremely powerful self priming force. Built with a check valve fully prevents liquid back-flow in the pump.
- Superior corrosion-resistant performance. Material-CFRPP、FRPP、PVDF(Teflon.)
- It resists strong acid and alkaline.

特點：

- 獨特的軸封設計 -內裝式採用 Teflon Bellow Seal 自冷式設計。無需冷卻循環管回路。
- 自吸式設計 - 自吸力特別強勁自吸式可達20ft ， 並有止回閥設計，防止泵內液體回流。
- 抗腐性強，材質CFRPP、FRPP、PVDF（鐵弗龍）。
- 耐強酸、耐強鹼。

KB PERFORMANCE CURVE CHART KB性能曲線圖

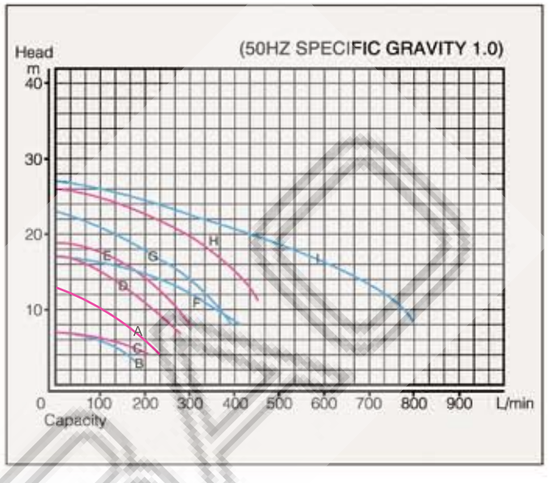

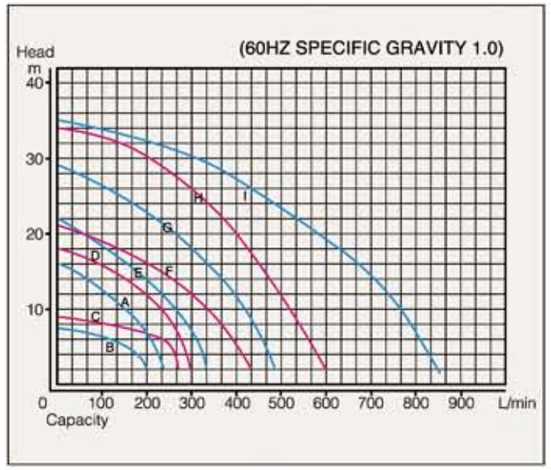

KB SERIES SPECIFICATIONS KB系列規格

Model 型式	CURVES NO. 曲線號碼	Full head (M) 全揚程	Full flow amount (L/MIN) 全流量	Head(M) 揚程	Flow amount (L/MIN) 流量	In/out diameter (m/m) 入口+出口（口徑）	Power 動力			Weight (KG) 重量
							No. of phase 相數	No. of charge 極數	Horse power 馬力	
Frequency: 50HZ										
KB-40011L	B	7	185	5	135	40/40	1Ø	4	1/2	27
KB-40012L	A	13	240	8	150	40/40	3Ø	2	1	26
KB-40013L	B	7	185	5	135	40/40	3Ø	4	1/2	27
KB-40014L	C	7	210	5	150	40/40	3Ø	4	1	29
KB-40022L	D	17	280	10	215	40/40	3Ø	2	2	30
KB-40022H	E	19	300	12	230	40/40	3Ø	2	2	34
KB-50032L	F	17	410	12	300	50/50	3Ø	2	3	38
KB-50032H	G	23	390	14	300	50/50	3Ø	2	3	42
KB-50052H	H	26	450	15	400	50/50	3Ø	2	5	54
KB-75052H	I	27	800	20	430	75/75	3Ø	2	5	96
Frequency: 60HZ										
KB-40011L	B	7.5	200	5	150	40/40	1Ø	4	1/2	27
KB-40012L	A	16	240	10	150	40/40	3Ø	2	1	26
KB-40013L	B	7.5	200	5	150	40/40	3Ø	4	1/2	27
KB-40014L	C	9	270	6	240	40/40	3Ø	4	1	29
KB-40022L	D	18	300	10	230	40/40	3Ø	2	2	30
KB-40022H	E	22	330	12	230	40/40	3Ø	2	2	34
KB-50032L	F	21	430	12	300	50/50	3Ø	2	3	38
KB-50032H	G	29	480	18	300	50/50	3Ø	2	3	42
KB-50052H	H	34	600	20	400	50/50	3Ø	2	5	54
KB-75052H	I	35	860	20	580	75/75	3Ø	2	5	96

KCL series

連接自吸式耐酸鹼泵浦

CONNECTING AND SELF-PRIMING CHEMICAL PUMP

FEATURES:

- Specially designed cooling for shaft seal. The built-in teflon bellow seal features automatic cooling performancewithout use of circulated cooling hose.
- Vaccum self priming design. Extremely powerful self priming force. Built with a choke valve fully prevents liquid back-flow in the pump.
- Superior corrosion-resistant performance. Material-CFRPP、FRPP、PVDF (Teflon.)
- It resits strong acid and alkaline.

特點：

- 獨特的軸封設計 －內裝式採用 Teflon Bellow Seal 自冷式設計。無需冷卻循環管回路
- 自吸式設計－自吸力特別強勁自吸式可達20ft，並有止回閥設計，防止泵內液體回流。
- 抗腐性強，材質CFRPP、FRPP、PVDF （鐵弗龍）。
- 耐強酸、耐強鹼。

KCL PERFORMANCE CURVE CHART KCL性能曲線圖

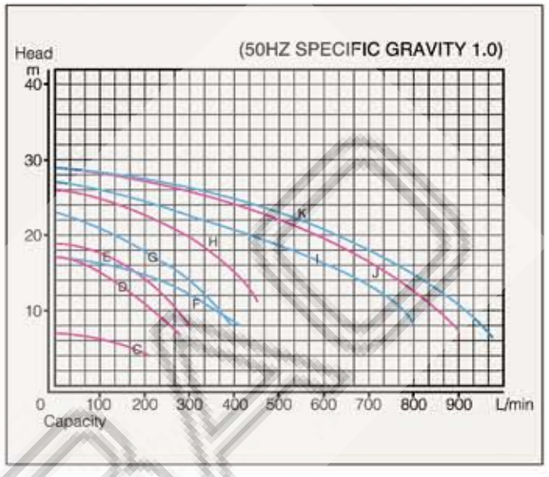

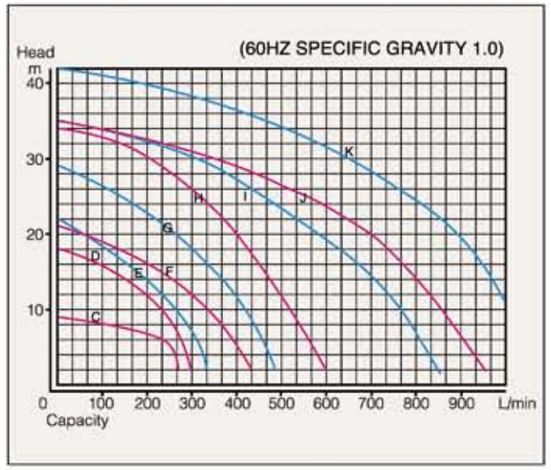

KCL SERIES SPECIFICATIONS KCL系列規格

Model 型式	CURVES NO. 曲線號碼	Full head (M) 全揚程	Full flow amount (L/MIN) 全流量	Head(M) 揚程	Flow amount (L/MIN) 流量	In/out diameter (m/m) 入口+出口（口徑）	Power 動力 No. of phase 相數	No. of charge 極數	Horse power 馬力	Weight (KG) 重量
Frequency: 50HZ										
KCL-40014L	C	7	210	5	150	40/40	3Ø	4	1	45
KCL-40022L	D	17	280	10	215	40/40	3Ø	2	2	53
KCL-40022H	E	19	300	12	230	40/40	3Ø	2	2	54
KCL-50032L	F	17	410	12	300	50/50	3Ø	2	3	74
KCL-50032H	G	23	390	14	300	50/50	3Ø	2	3	75
KCL-50052H	H	26	450	15	400	50/50	3Ø	2	5	93
KCL-75052H	I	27	800	20	430	75/75	3Ø	2	5	96
KCL-75072H	J	29	900	20	580	75/75	3Ø	2	7 1/2	112
KCL-75102H	K	29	980	20	620	75/75	3Ø	2	10	122
Frequency: 60HZ										
KCL-40014L	C	9	270	6	240	40/40	3Ø	4	1	45
KCL-40022L	D	18	300	10	230	40/40	3Ø	2	2	53
KCL-40022H	E	22	330	12	230	40/40	3Ø	2	2	54
KCL-50032L	F	21	430	12	300	50/50	3Ø	2	3	74
KCL-50032H	G	29	480	18	300	50/50	3Ø	2	3	75
KCL-50052H	H	34	600	20	400	50/50	3Ø	2	5	93
KCL-75052H	I	35	860	20	580	75/75	3Ø	2	5	96
KCL-75072H	J	35	960	20	700	75/75	3Ø	2	7 1/2	112
KCL-75102H	K	42	1000	20	890	75/75	3Ø	2	10	122

KB SERIES

CONSTRUCTION 零件圖表

NO	DESCRIPTION 名稱	MATERIAL 材質
1	MOTOR 馬達	
2	BASE FRAME 腳座	FC FRPP
3	REAR COVER 後封蓋	FRPP CFRPP PVDF
4	REAR COVER O-RING 封蓋 O 環	NBR EPT VITON
5-1	SHAFT SLEEVE 軸套	TEFLON
5-2	SHAFT 軸心	SUS
5-3	SHAFT NUT 軸心固定螺絲	SUS
5-4	SHAFT KEY 軸心鍵	SUS

NO	DESCRIPTION 名稱	MATERIAL 材質
6	MAIN BODY 主體	FRPP CFRPP PVDF
7	SEAL COVER AND O-RING 軸封護罩附 O 環	FRPP CFRPP PVDF/ NBR VITON
8	STATIONARY RING AND O-RING 陶瓷環座附 O 環	PPS/ PVDF VITON
9	FRONT SEAL 前軸封	TEFLON
9-1	ROTATIONAL RING 轉動環	CARBON SIC
9-2	TEFLON BELLOWS 伸縮環	TEFLON
9-3	SPRING 彈簧	SUS HC
9-4	FRONT O-RING 前 O 環	NBR VITON

NO	DESCRIPTION 名稱	MATERIAL 材質
9-5	PACKING 墊片	NBR VITON
9-6	REAR O-RING 後 O 環	NBR VITON
10	SEAL STATIONARY RING AND O-RING 軸封固定環附 O 環	CERAMIC SIC NBR VITON
11	IMPELLER 葉輪	FRPP CFRPP PVDF
12	IMPELLER NUT AND O-RING 葉輪固定螺絲附O環	FRPP PVDF NBR VITON
13	CHECK COVER 中封蓋	FRPP CFRPP PVDF
13S	CHECK COVER NUT 中封蓋固定螺絲	SUS
14	CHECK VALVE 單向閥	NBR EPT VITON TEFLON

NO	DESCRIPTION 名稱	MATERIAL 材質
15	WATER FILLING CAP AND O-RING 注水蓋附 O 環	FRPP CFRPP PVDF VITON
16	SELF-PRIMING BARREL 自吸筒	FRPP CFRPP PVDF
16S	SELF-PRIMING BARREL NUT 自吸筒固定螺絲	SUS
17	SELF-PRIMING PACKING 自吸筒墊片	NBR EPT VITON
18	FRAME 腳架	FRPP

IN-OUTLET 出入口徑：1 1/2", 2" HORSE POWER 動力： 1/2~3HP

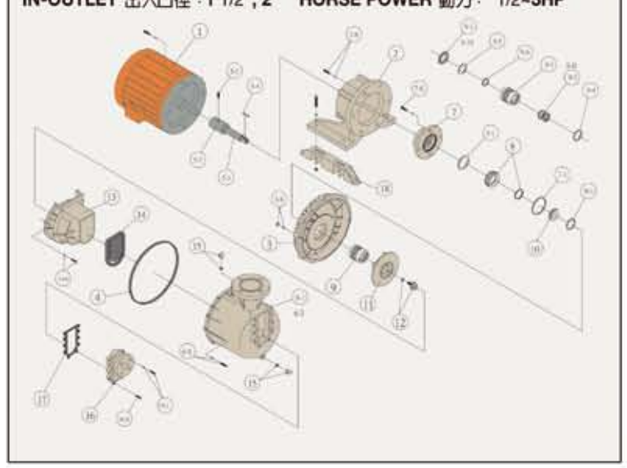

IN-OUTLET 出入口徑：2" HORSE POWER 動力： 5HP

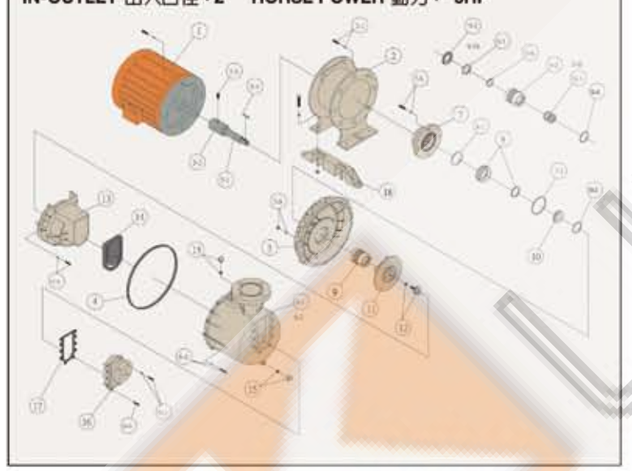

IN-OUTLET 出入口徑：3" HORSE POWER 動力： 5HP

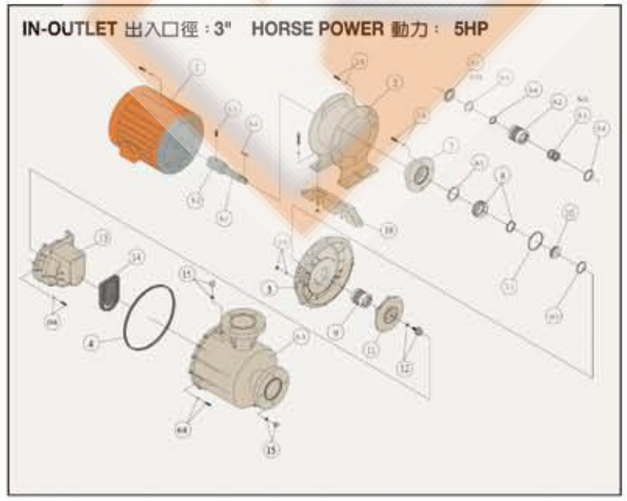

DIMENSION DRAWING

KB-40011L/40013L

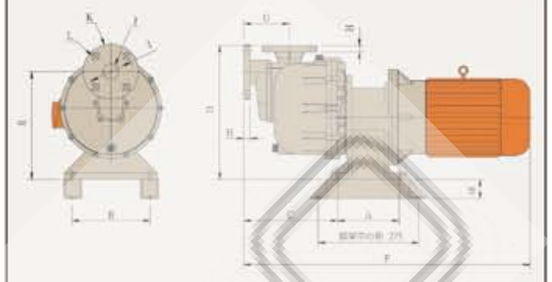

KB-40012L/40014L/40022H/40022L/50032L/ 50032H

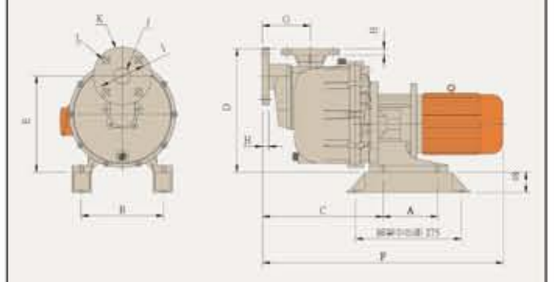

MODEL	A	B	C	D	E	F	G	H	I	J	K	L	M	N	O
KB-40011L	150	203	317	322	245	636	130	16	Ø103	Ø40	Ø138	Ø20			
KB-40013L	150	203	317	322	250	636	130	16	Ø103	Ø40	Ø138	Ø20			

MODEL	A	B	C	D	E	F	G	H	I	J	K	L	M	N	O
KB-40012L	142	214	320	322	250	626	130	16	Ø103	Ø40	Ø138	Ø20			
KB-40014L	142	214	320	322	250	626	130	16	Ø103	Ø40	Ø138	Ø20			
KB-40022H	142	220	320	322	250	705	130	16	Ø103	Ø40	Ø138	Ø20			
KB-40022L	142	220	320	322	250	705	130	16	Ø103	Ø40	Ø138	Ø20			
KB-50032L	142	214	320	322	250	705	130	18	Ø118	Ø50	Ø154	Ø20			
KB-50032H	142	214	320	322	250	705	130	18	Ø118	Ø50	Ø154	Ø20			

DIMENSION DRAWING

KB-50052H

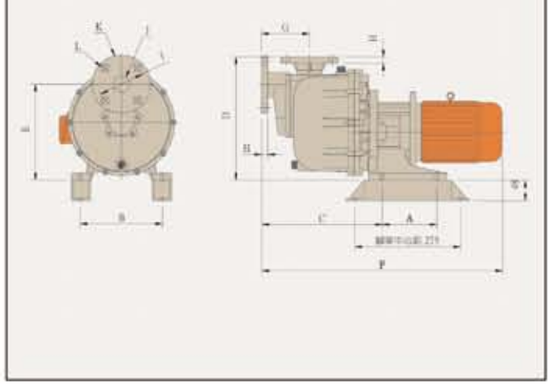

KB-75052H

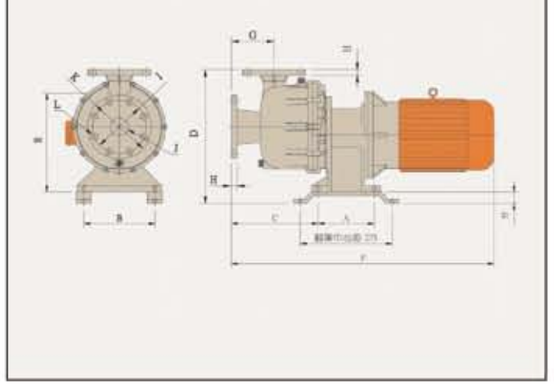

MODEL	A	B	C	D	E	F	G	H	I	J	K	L	M	N	O
KB-50052H	168	213	272	370	290	783	130	18	Ø118	Ø50	Ø154	Ø20			
KB-75052H	168	213	298	368	200	815	110	18	Ø150	Ø75	Ø185	Ø20			

KCL SERIES

CONSTRUCTION 零件圖表

NO	DESCRIPTION 名稱	MATERIAL 材質
1	MOTOR 馬達	
2	BASE FRAME 腳座	FC FRPP
2-1	FRAME BEARING 腳座培林	SC
2-2	BEARING COBRT 培林防塵蓋	FC
2-3	WATER DEFEND SEAK 培林防水蓋	PP
3	REAR COVER 後封蓋	FRPP CFRPP PVDF
4	REAR COVER O-RING 封蓋 O 環	NBR EPT VITON
5	SHAFT 軸心	SUS TEFLON

NO	DESCRIPTION 名稱	MATERIAL 材質
5-1	SHAFT SEAL 套筒	TEFLON
5-2	CONNECTION KEY 連軸器鍵 葉輪鍵	IRON SUS
6	MAIN BODY 主體	FRPP CFRPP PVDF
7	SEAL COVER AND O-RING 軸封護罩附 O 環	FRPP CFRPP PVDF/VITON NBR
8	STATIONARY RING AND O-RING 陶瓷環座附 O 環	PPS PVDF VITON NBR
9	FRONT SEAL 前軸封	TEFLON
9-1	ROTATIONAL RING 轉動環	CARBON SILICON
9-2	TEFLON BELLOWS 伸縮環	TEFLON

IN-OUTLET 出入口徑：1 1/2", 2" HORSE POWER 動力： 1~5HP

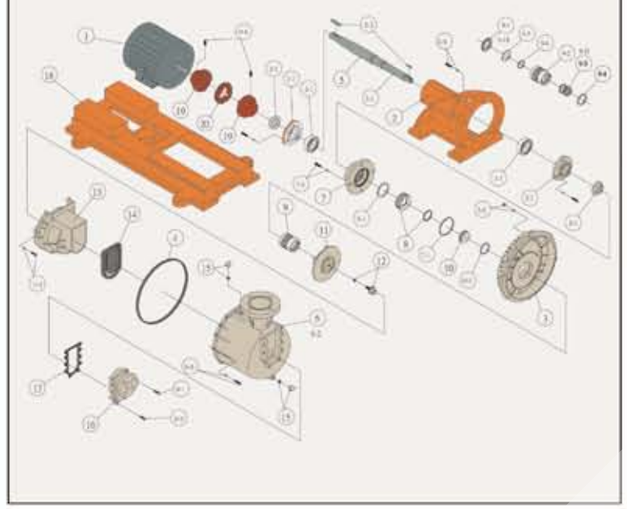

NO	DESCRIPTION 名稱	MATERIAL 材質
9-3	SPRING 彈簧	SUS HC
9-4	FRONT O-RING 前 O 環	NBR VITON
9-5	PACKING 墊片	NBR VITON
9-6	REAR O-RING 後 O 環	NBR VITON
10	SEAL STATION ARY RING AND O-RING 軸封固定環附O環	CERAMIC SIC/ NBR VITON
11	IMPELLER 葉輪	FRPP CFRPP PVDF
12	IMPELLER NUT AND O-RING 葉輪固定螺絲附O環	FRPP PVDF CFRPP VITON / NBR
13	CHECK COVER 中封蓋	FRPP CFRPP PVDF

NO	DESCRIPTION 名稱	MATERIAL 材質
13S	CHECK COVER NUT 中封蓋螺絲	SUS
14	CHECK VALVE 單向閥	NBR EPT VITON TEFLON
15	WATER FILLING CAP AND O-RING 注水蓋附 O 環	FRPP CFRPP PVDF/VITON NBR
16	SELF-PRIMING BARREL 自吸筒	FRPP CFRPP PVDF
17	SELF-PRIMING BARREL PACKING 自吸筒墊片	NBR EPT VITON
18	FRAME 底座	FC
19	COUPLING 聯軸器	FC
20	COUPLING RUBBER 聯軸器橡膠	NBR

IN-OUTLET 出入口徑：3" HORSE POWER 動力： 5~10HP

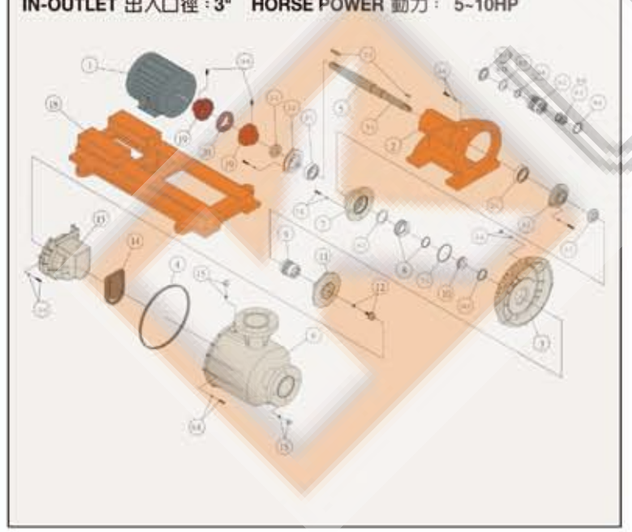

DIMENSION DRAWING

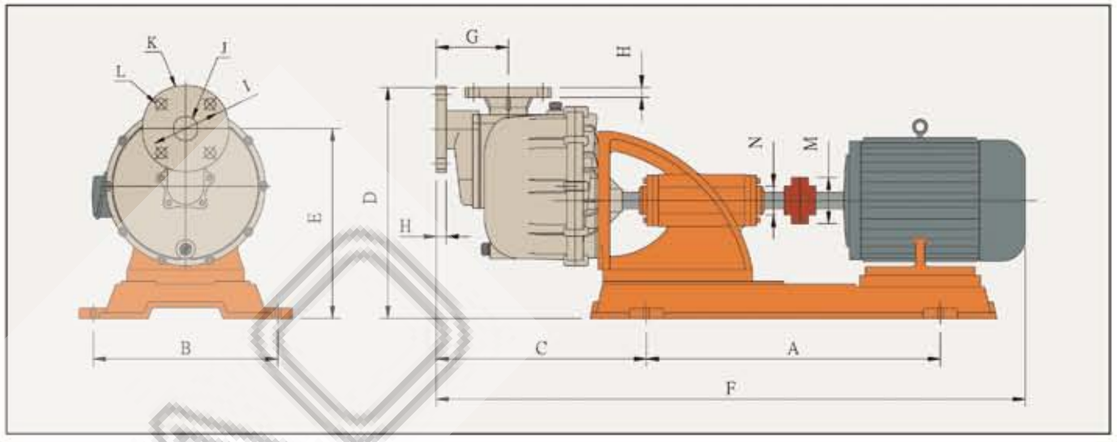

DIMENSION TABLE

MODEL	A	B	C	D	E	F	G	H	I	J	K	L	M	N	O
KCL-40012L	512	310	373	386	316	970	130	16	Ø103	Ø40	Ø138	Ø20	Ø82	Ø53	
KCL-40014L	512	310	373	386	316	970	130	16	Ø103	Ø40	Ø138	Ø20	Ø82	Ø53	
KCL-40022L	512	310	373	386	316	970	130	16	Ø103	Ø40	Ø138	Ø20	Ø82	Ø53	
KCL-40022H	512	310	373	386	316	970	130	16	Ø103	Ø40	Ø138	Ø20	Ø82	Ø53	
KCL-50032L	512	310	375	340	320	980	130	18	Ø118	Ø50	Ø154	Ø20	Ø82	Ø53	
KCL-50032H	512	310	375	340	320	980	130	16	Ø118	Ø50	Ø154	Ø20	Ø82	Ø53	
KCL-50052H	512	310	375	394	320	1030	130	16	Ø118	Ø50	Ø154	Ø20	Ø82	Ø53	

DIMENSION DRAWING

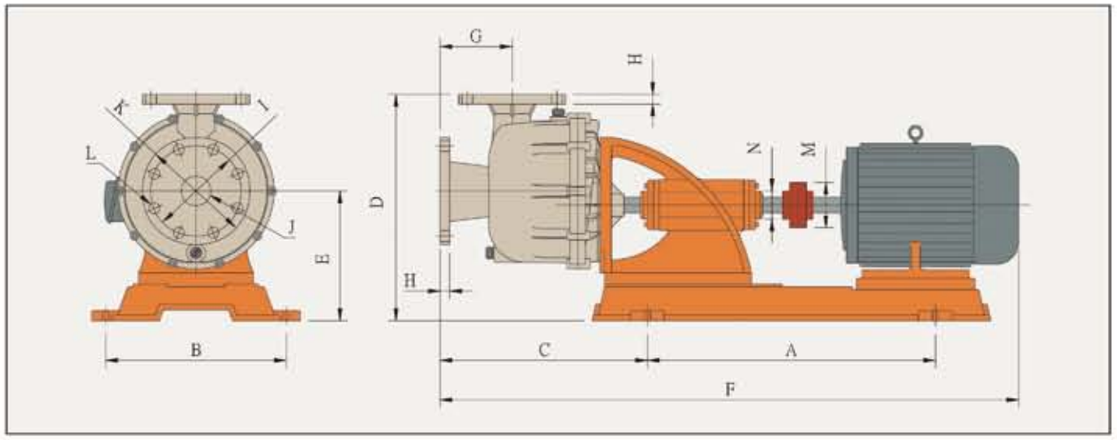

DIMENSION TABLE

MODEL	A	B	C	D	E	F	G	H	I	J	K	L	M	N	O
KCL-75052H	510	310	425	390	210	1135	110	18	Ø145	Ø75	Ø185	Ø20	Ø82	Ø53	
KCL-75072H	510	310	425	390	210	1140	110	18	Ø145	Ø75	Ø185	Ø20	Ø97	Ø69	
KCL-75102H	510	310	425	390	210	1140	110	18	Ø145	Ø75	Ø185	Ø20	Ø97	Ø69	