LED 200W 90D LINEAR LIGHT

GENERAL SPECIFICATION

Input voltage	AC 240V
Power factor	0.993
Operating temperature	20~50°C
Color Rendering Index	>RA 80
IP Class	IP 65
Beam angle	90°
Materials	Aluminum (Fin type) , Polycarbonate
Warranty	2 years

IN COLLABORATION WITH

LUXEON 3030 2D

	Wattage (W)	Luminous Flux (Lm)	System Efficiency (Lm/W)	Color Temperature (K)
HLP-LLM4-200D90-PP-V	200	21209.3	106.04	2800K (Warm White) 4000K (Nature White) 5700K ~ 6000K (Cool White)

*V refers to color temperature. (w/w=3000K(warm white), n/w=4000K(natural white), and w=5700K(white).

APPLICATION

Warehouse, Auditorium (halls), Shopping Production Areas & Factories

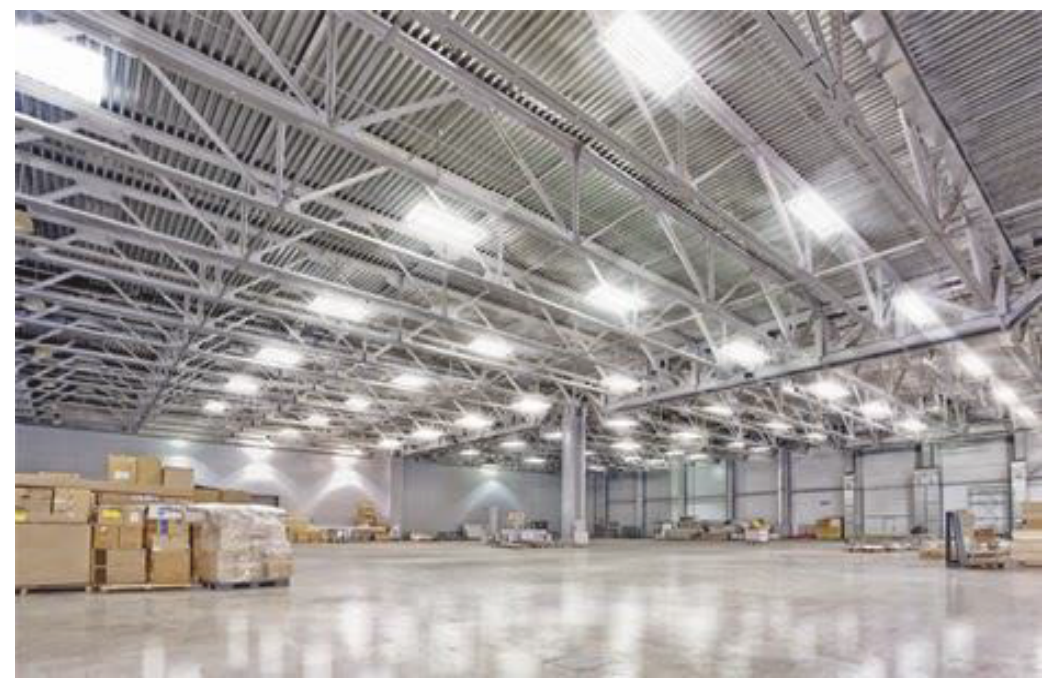

* All LED components are subjected to LED manufacturer and warranty terms and conditions
* Specifications are subjected to change without prior notice

PHOTOMATRIC DATA

Luminous Intensity Distribution Curve

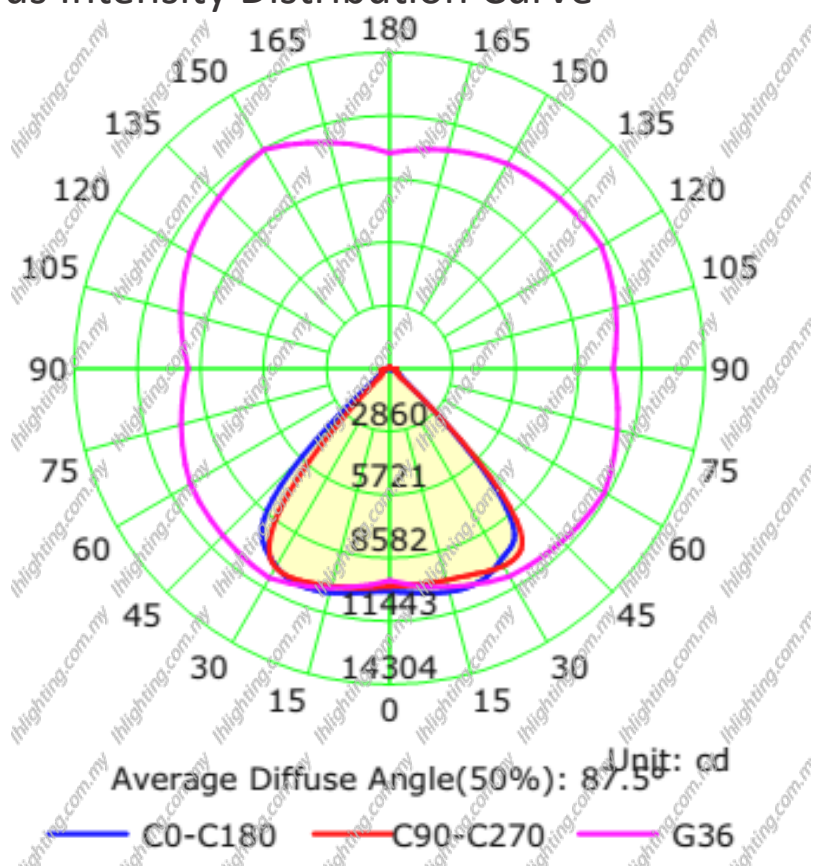

The Average Illuminance Effective Figure

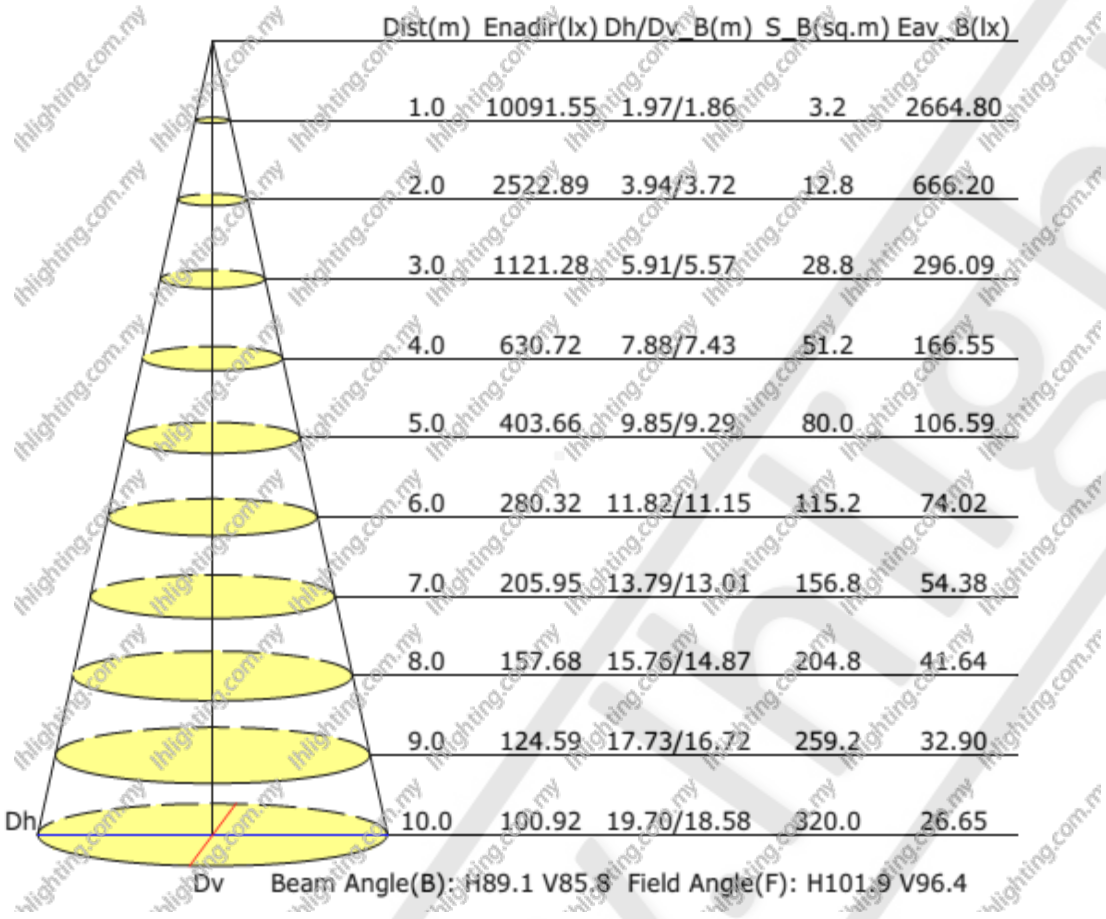

DIMENSIONS

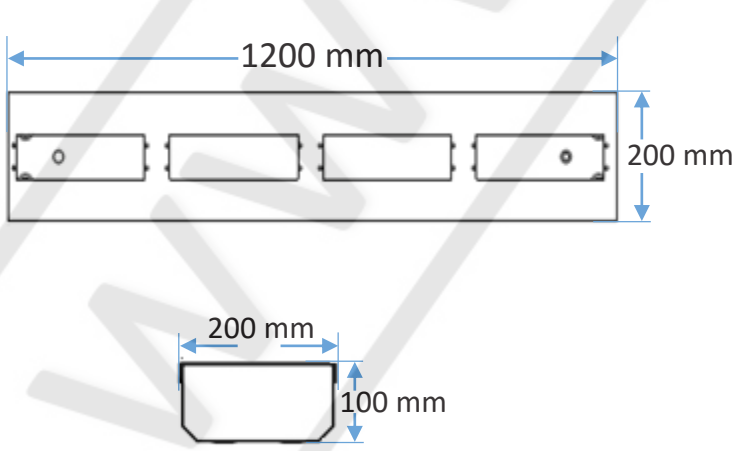

TECHNICAL DATA

LUMINAIRE TECHNICAL DATA

- Operating Temperature : 20 °C ~ 50°C
- Ingress Protection : IP 65

COMPLIANCE STANDARD

- LED : LM80
- Luminaire : LM79-08

LED TECHNICAL DATA

- LED Light Source : Lumileds LUXEON 3030 2D
- Rendering index : > RA 80
- LED Life Cycle : 52,000 hours

POWER SUPPLY

- Power Factor : > 0.9
- Output Current : 4.8 A
- Life Cycle : > 36,000 hours

	HLP-LLM4-200D90-PP-V
Length (mm)	1200
Height (mm)	100
Width (mm)	200

* All LED components are subjected to LED manufacturer and warranty terms and conditions
* Specifications are subjected to change without prior notice