Control the Pressure of your System

CPM Constant-Pressure Modulating Valve

Concept
CPMI-2, CPMI-D60 and CPMO-2 are sanitary constant-pressure valves. CPMI-2 and CPMI-D60 (Constant-Pressure Modulating Inlet) maintain a constant pressure in the process line at the inlet side of the valve. Typical applications are after separators, heat exchangers or overflow valves. CPMO-2 (Constant-Pressure Modulating Outlet) maintains a constant pressure in the process line at the outlet side of the valve. Typical applications are before filling/bottling machines etc.

Working principle
The valves are remote-controlled by means of compressed air. A diaphragm/valve plug system reacts immediately to any alteration of the product pressure and changes position so that the preset pressure is maintained.

Standard design
The CPMI-2 and CPMO-2 consist of a valve body with valve seat, cover, a valve plug with a diaphragm unit and a clamp. The cover and the valve body are clamped together. The valve body and the seat are welded together. The CPM-I-D60 consists of upper and lower valve bodies, an inlet tube, a cover, a valve plug with diaphragm unit and clamps. The cover and the valve bodies are clamped together.

TECHNICAL DATA

Max. product pressure:	1000 kPa (10 bar).
Min. product pressure:	0 kPa (0 bar).
Temperature range:	10°C to 95°C (EPDM).
Temperature range with upper diaphragm in PTFE/EPDM:	10° C to +140° C. (Higher on request).
Air pressure (CPMI-2/CPMO-2):	0 to 800 kPa (0 to 8 bar).
Air pressure (CPM-I-D60):	0 to 600 kPa (0 to 6 bar).
Flow Kv 23, fully open (Dp = 1 bar):	Approx 23 m^3/h.
Flow Kv 7 (Δp = 1 bar):	Approx 7 m^3/h.
Flow Kv 9 (Δp = 1 bar):	Approx 9 m^3/h.
Flow Kv2/15, low capacity (Δp = 1 bar): (Alternative size)	Approx 2 m^3/h. (regulating area). Approx. 15 m^3/h. (CIP area).
Flow range Kv60, fully open (Δp = 1 bar) (CPM-I-D60)	Approx 60 m^3/h.

PHYSICAL DATA

Materials

Product wetted steel parts:	1.4404 (316L).
Other steel parts:	1.4301(304).
Lower diaphragm:	PTFE covered EPDM rubber
Upper diaphragm	NBR

Air Connections
R 1/4" (BSP), internal thread.

Options

A. Male parts or clamp liners in accordance with required standard.
B. Air pressure regulating valve kit, 0-8 bar.
C. Air throttling valve for adjustment of regulating speed for the CPM-2 valve.
D. Booster for product pressure exceeding the available air pressure. (Product pressure = 1.8 x air pressure).
E. US 3A version available on request for CPM-2 valves only

Material grades CPM-2

F. Upper diaphragm of PTFE covered EPDM and O-ring of FPM covered EPDM, (for temperature 95-140°C).
G. Both diaphragms of solid PTFE and O-ring of FPM (for temperatures above 140°C).

Material grades CPM-I-D60

H. Upper diaphragm of PTFE covered EPDM.
I. Valve body seal rings of NBR or FPM.
J. Guide O-ring of FPM (for temperatures above 95°C).

Fig. 1. Principle

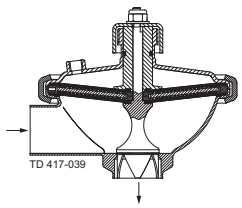

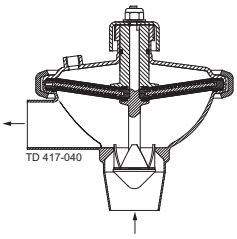

CPMI-2 CPMO-2

a. Reduced product pressure.

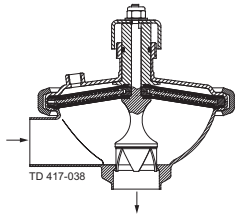

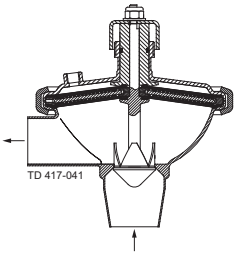

CPMI-2 CPMO-2

b. Increased product pressure.

CPMI-2 and CPM-I-D60 opens at increasing product pressure and vice versa.
CPMO-2 closes at increasing product pressure and vice versa.

Diaphragm Unit

CPMI-2 and CPMO-2: The diaphragm unit consists of a stainless steel disc which is divided into sectors and of flexible diaphragms which are placed on each side of the sectors. CPM-I-D60: The diaphragm unit consists of two flexible diaphragms supported by 12 stainless steel sectors in between them.

Note!

For further details, see also instructions ESE01825 and ESE01834

Fig. 2. CPMI-2 with pressure regulating valve and pressure gauge.

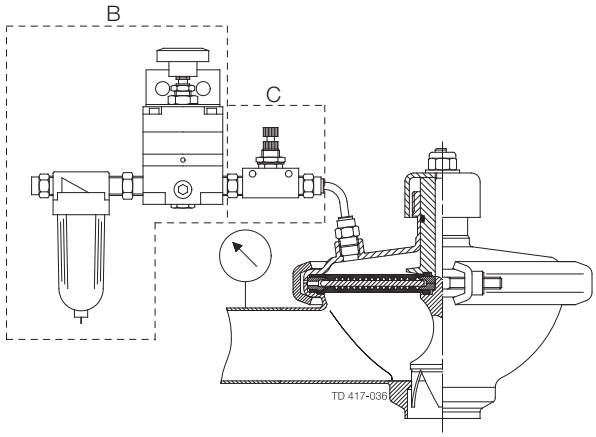

The valves operate without a transmitter in the product line and require only a pressure regulating valve for the compressed air and a pressure gauge in the product line.

Pressure drop/capacity diagrams

CPM-2, Kv 23

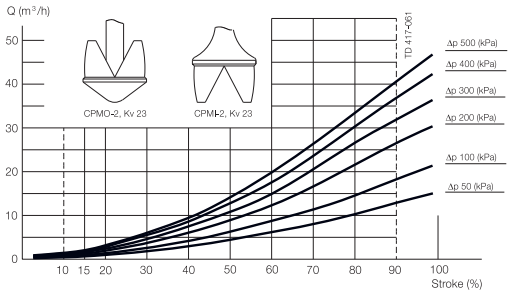

Note!

For all diagrams the following applies:

Medium: Water (20°C).

Measurement: In accordance with VDI 2173.

CPMI-2, Kv 7

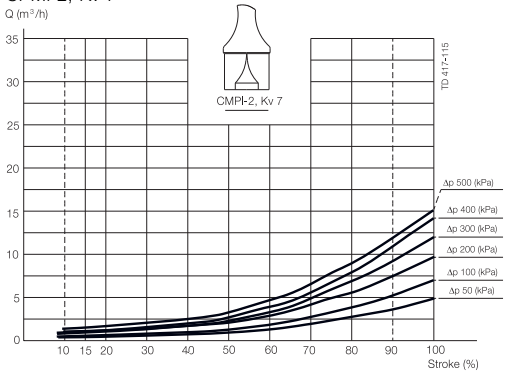

CPMO-2, Kv 9

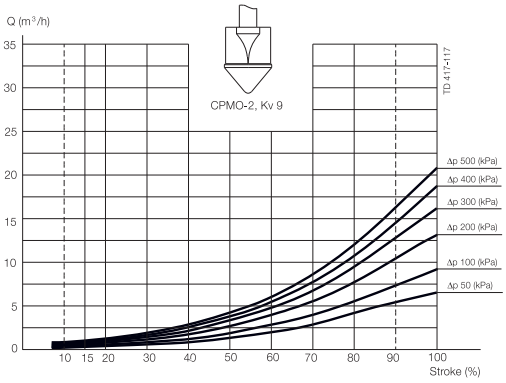

CPM-2, Kv 2/15

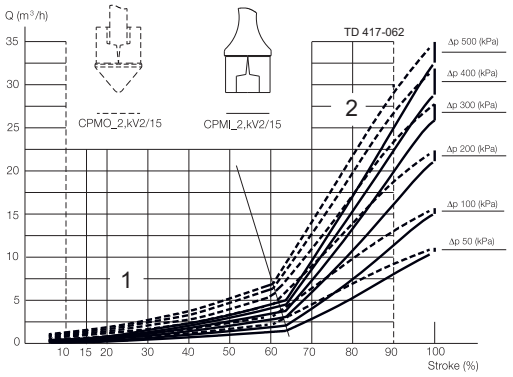

CPM-I-D, Kv 60

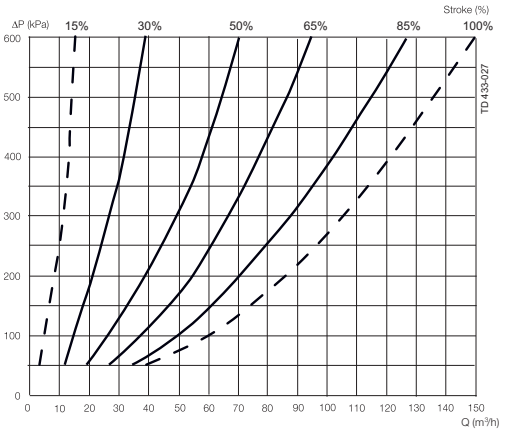

Example 1:
Pressure drop Δp = 200 kPa.
Flow Q = 8 m^3/h.
Select: CPM-2, Kv 23 which at working point will be 48% open.

Example 2:
CPMI-2:
Pressure drop Δp = 300 kPa.
Flow Q = 1 m^3/h.
Select: CPMI-2, Kv 2/15 which at working point will be approx. 35% open equal to about 50% of the regulating area.

Example of using the diagram:
1. Pressure drop Δp = 300 kPa.
2. Flow = 50m^3/h.

The intersection is on the 50% curve.

Note!
Always try to get as close as possible to the 50% open curve. If the CPM-I-D60 is too big select from the CPMI-2 curves.

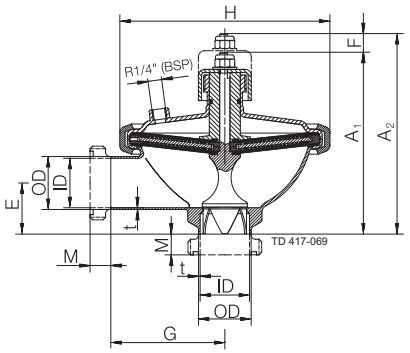

a. CPMI-2.

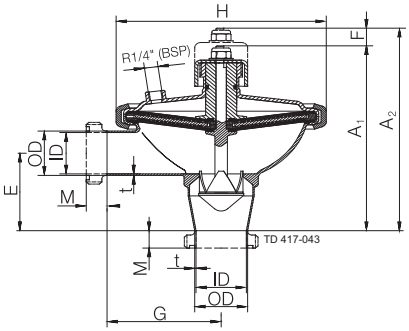

b. CPMO-2

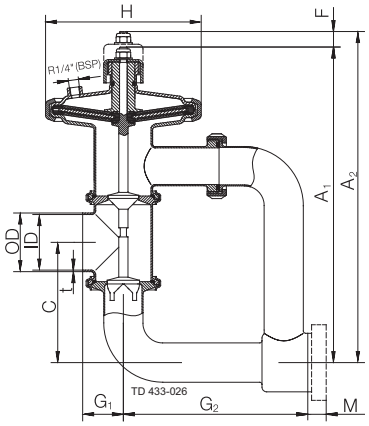

c. CPM-I-D60.

Dimensions (mm)

Size	CPMI-2			CPMO-2			CPM-I-D60
	Kv 23	Kv 7	Kv 2/15	Kv 23	Kv 9	Kv 2/15	76 mm
A1	175.1	175.1	175.1	211	175.1	175.1	413.2
A2	193.4	193.4	193.4	229.3	229.3	193.4	430
C	-	-	-	-	-	-	155
OD (Inch/DN)	53/50.8	53/50.8	53/50.8	53/50.8	53/50.8	53/50.8	76
ID (Inch/DN)	50/47.6	50/47.6	50/47.6	50/47.6	50/47.6	50/47.6	72
t (Inch/DN)	1.6/1.5	1.6/1.5	1.6/1.5	1.6/1.5	1.6/1.5	1.6/1.5	2
E (Inch/DN)	50/49.2	50/49.2	50/49.2	50/49.2	50/49.2	50/49.2	
F	18.3	18.3	18.3	18.3	18.3	18.3	16.8
G	110	110	110	110	110	110	
G1	-	-	-	-	-	-	53
G2	-	-	-	-	-	-	240
H	203	203	203	203	203	203	200
M/ISO clamp	21	21	21	21	21	21	21
M/ISO male	21	21	21	21	21	21	21
M/DIN male	22	22	22	22	22	22	30
M/SMS male	20	20	20	20	20	20	24
M/BS male	22	22	22	22	22	22	22
Seat diameter	42	31	31	42	31	31	
Weight (kg)	5.5	5.5	5.5	5.5	5.5	5.5	10

How to contact Alfa Laval
Contact details for all countries are continually updated on our website. Please visit www.alfalaval.com to access the information direct.