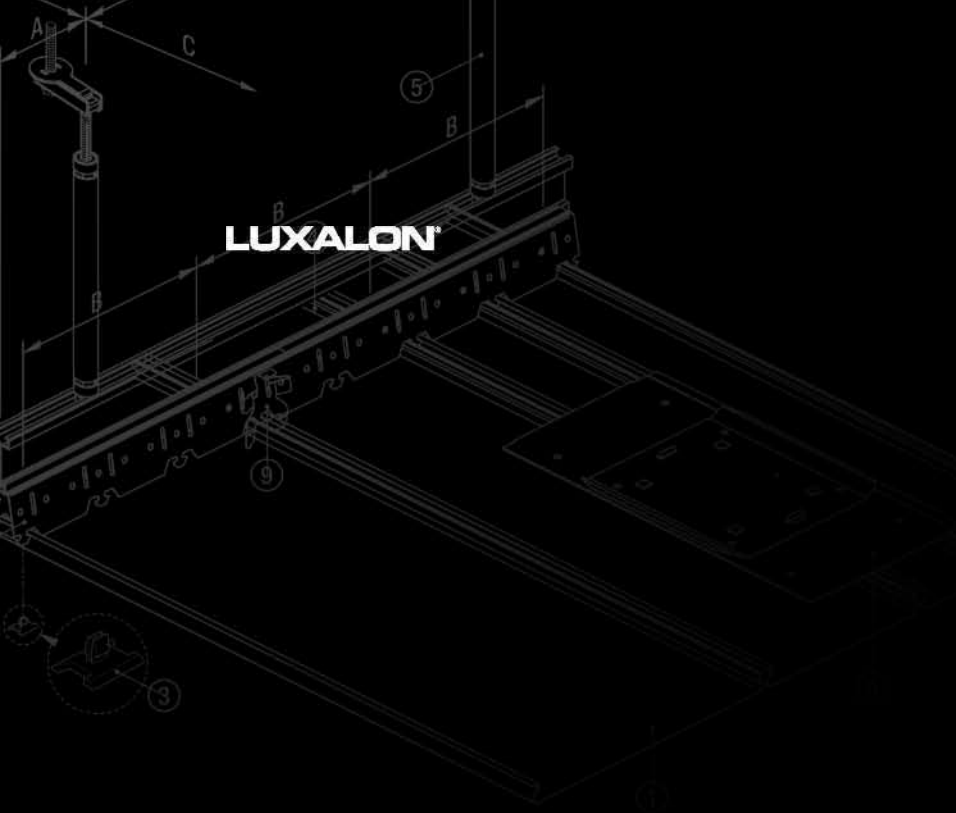


# Exterior

Luxalon® **Exterior Ceilings** by Hunter Douglas in special aluminium alloy attached to rigidly suspended carriers **ensure durability and** withstand severe conditions. Allowing a wide range of design possibilities exterior ceilings are specially developed with the same **aesthetic appearance** as the Luxalon® Interior Ceilings.

**HunterDouglas**

CEILINGS

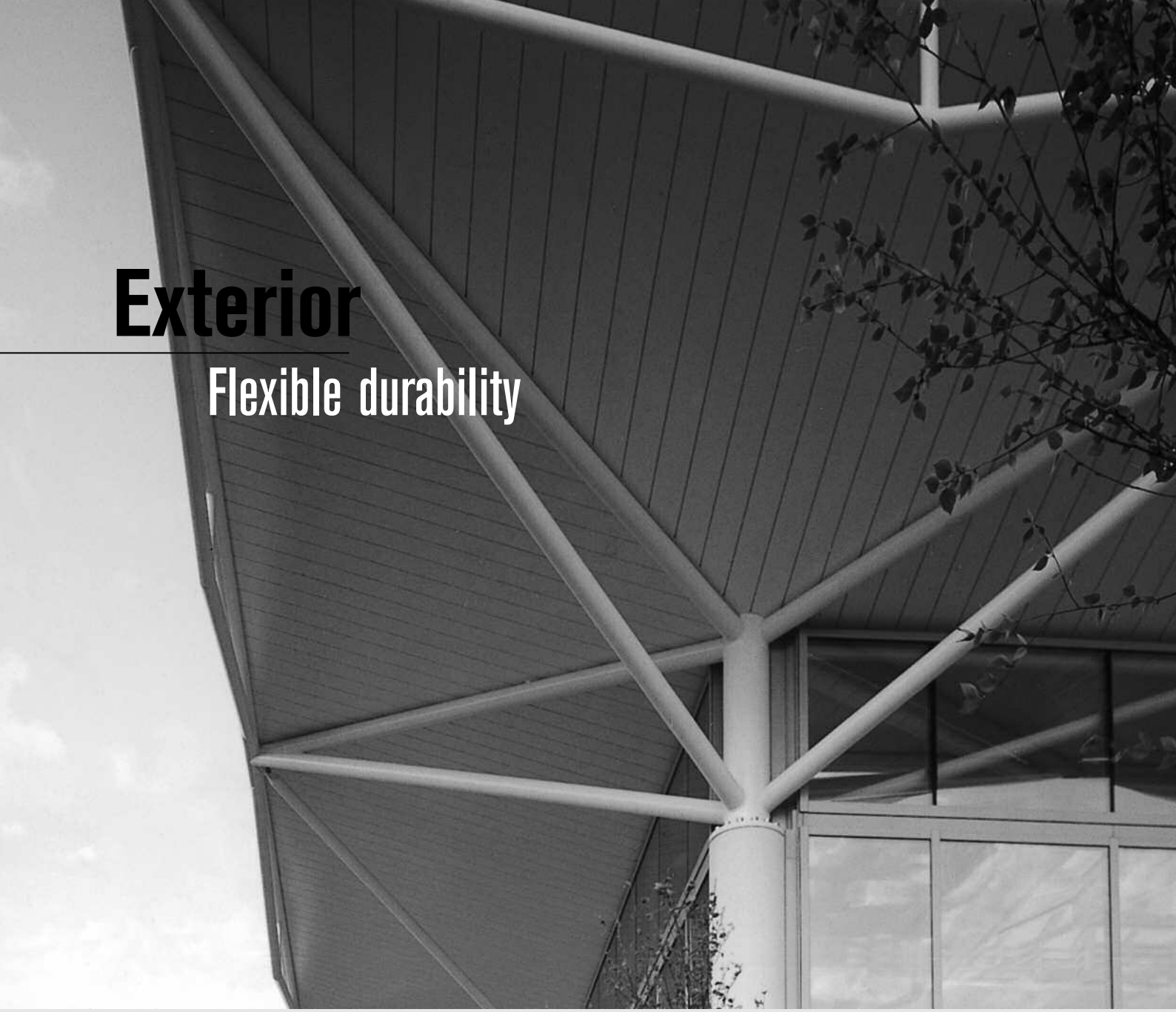

# Exterior

## Flexible durability

**A PROVEN SYSTEM**

Hunter Douglas' Luxalon® Exterior Ceiling system is specially developed to withstand the strongest weather influences. Tested by TNO, an independent testing and research institute in the Netherlands, these ceilings are guaranteed to impress with their durability and design for many years after installation. The ceiling panels are roll formed from pre-painted, stove-enamelled aluminium strip made from an alloy that is excellent for exterior applications.

The Luxalon® Exterior Ceiling system appears in many different applications including overhanging ceilings in office buildings and hotels, canopies in gas stations, and underpass applications in metro and railway stations.

**DESIGN FLEXIBILITY**

The Luxalon® Exterior Ceiling system creates new opportunities for expressive architecture and adds beauty and durability to any building's exterior. Concave, convex, and undulating sections can be easily formed to design the perfect curved ceiling. The standard Luxalon® exterior colour range features a variety of colours and finishes, with RAL or NCS colours delivered on request. Some Luxalon® Exterior Ceiling systems are also available for interior applications, allowing architects to visually connect the interior and exterior of a building for an impressive, unified look.

**WEATHER RESISTANCE**

Luxalon® Exterior Ceilings are developed to withstand all weather influences including intensive sunshine, dramatic temperature changes, moisture, pollution and strong wind loads. Their durability comes from the patented Luxacote® system, a tough coating that guarantees colour stability and high resistance against corrosion and scratches. The ceilings are made with an

ideal corrosion-resistant aluminium and feature Luxalon® Profix, Hunter Douglas' exterior windproof suspension system.

**EASY PLENUM ACCESS**

The Luxalon® system allows for easy (de)mounting of ceiling panels. Installed on a concealed suspension system, each panel and infill can be removed and replaced by hand, allowing easy and full access to services and installations in the plenum.

## CONTENT


| | Page |
|---|---|
| 84R | 2 |
| 80B, 84B | 3 |
| 84C | 4 |
| 75C, 150C, 225C | 5 |
| 300A, C, L | 6 - 7 |
| 150F, 200F | 8 |
| 70U, 185U | 9 - 10 |
| V100 | 11 |
| Façade systems as Ceiling application | 12 |
| Edge solutions | 13 |
| Specifications | 14 - 15 |
| Maximum Spans | 16 - 25 |
| Material Specifications | 26 |
| Impressions | 27 |


# Innovative Products Make Innovative Projects

alu

Production by Hunter Douglas Ceiling Center

TAIM

HunterDouglas

# 84R

## PANELS

The Luxalon® 84R Ceiling system consists of round edged panels (1) which can be easily clipped on an 84R carrier (2). Panels can be joined by using the panel splice (8). Between the panels there is an open joint of 16 mm, which can be filled with a 16 mm wide flush join profile (9a) to form a flush closed ceiling appearance or a recessed joint (9b). Join profiles can be simply inserted by hand, without using any tools.

## SUSPENSION

The panel carrier (2) is black and is provided with prongs to accommodate the panels in a standard module of 100 mm. Carriers have a standard length of 5000 mm.

A = Luxalon® Profix cantilever
B = carrier span
C = panel span
D = panel cantilever
E = Luxalon® Profix-carrier span

1 = 84R panel
2 = carrier
3 = screw washer
4 = reinforcement
5 = hanger
6 = top fixing
7 = threaded rod
8 = panel splice
9a = flush joint
9b = recessed joint
10 = locking clip
11 = non-HD

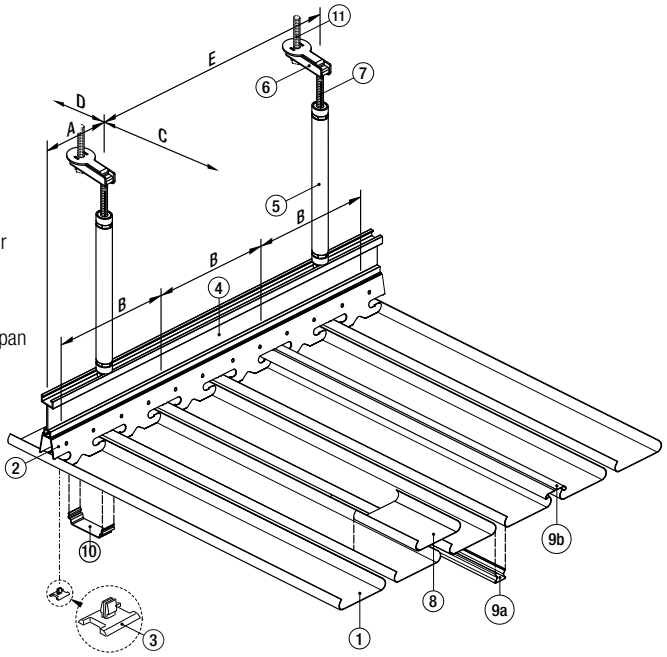


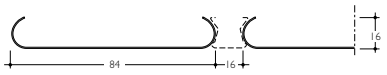


## CONSTRUCTION DETAILS

Curved ceilings can be achieved by curving the 84R panels. See separate brochure for curved ceilings. The system is also available for interior applications.
The Luxalon® standard range of edge profiles can be used as perimeters.

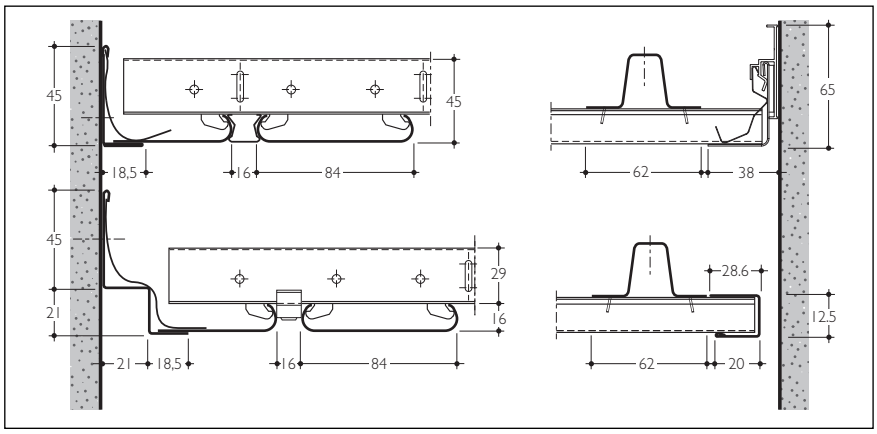


## MAXIMUM SPANS

See graphs on page 16.

## DIMENSIONS & WEIGHTS

* Based on panels installed on 3 or more carriers. The panels are made to measure in any length up to 6000 mm.
Panels > 6000 mm available on request.

| Panel | Width (mm) | Module (mm) | Min. length (mm) | Max. length (mm) | Weight panels & carriers/m²* Aluminium carrier | |
|---|---|---|---|---|---|---|
| | | | | | Excl joins | Incl joins |
| 84R | 84 | 100 | 1000 | 6000 | 1.7 kg | 2.2 kg |

## MATERIAL REQUIREMENT PER M²

The required number of components depend on individual project requirements. Figures based on a ceiling installed on 3 or more carriers and submitted to a windload (pressure) of 1000 N/m². For corners, roof edges, special designs etc. wind pressure/suction shall be determined with due consideration to the local country's Standard Codes of Building Practice.

| | Unit | 84R exterior system (panel + flush joint) |
|---|---|---|
| Panels | lm | 10 |
| Join profiles | lm | 10 |
| Carriers | lm | 1.25 |
| Carrier splice | pcs | 0.25 |
| Suspension | pcs | 2.13 |
| Locking clips | pcs | 12.5 |

# 80B, 84B

## PANELS

The Luxalon® 80B/84B Ceiling system consists of box shaped, 80 mm/84 mm wide aluminium panels (1) which can be easily clipped on the 80B/84B carrier (2). Panels can be joined by using the panel splice (8).

Between the 80B panels there is an open joint of 20 mm, which can be filled with a recessed U-shaped infill profile (9). Between the 84B panels there is an open joint of 16 mm.

## SUSPENSION

The carrier (2) is black, and provided with prongs to accommodate the panels in a module of 100 mm. Carriers have a standard length of 5000 mm.

A = Luxalon® Profix cantilever
B = carrier span
C = panel span
D = panel cantilever
E = Luxalon® Profix-carrier span

1 = 80B/84B panel
2 = carrier
3 = screw washer
4 = reinforcement
5 = hanger
6 = top fixing
7 = threaded rod
8 = panel splice
9 = joint-infill (80B only)
10 = locking clip (84B only)
11 = non-HD

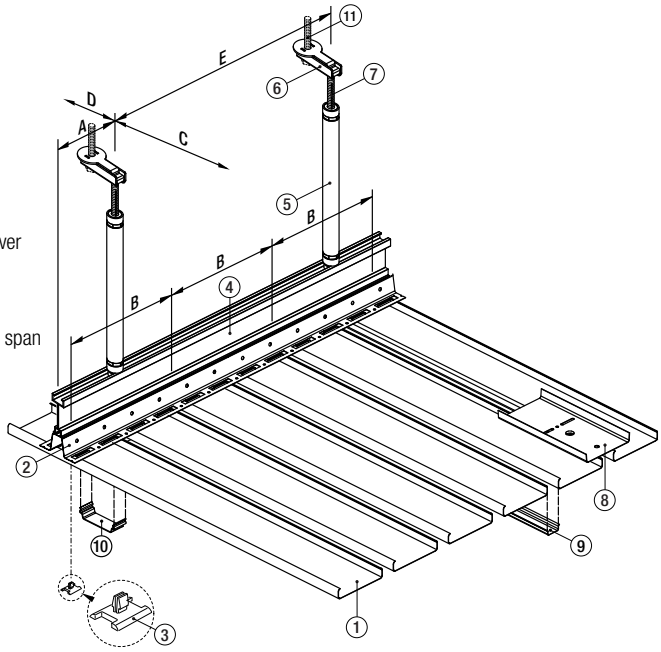

## CONSTRUCTION DETAILS

The 80B panels combined with join profiles provide a visually closed ceiling.
The system is also available for interior applications. Flexible carriers are available in order to create a curved ceiling. See separate brochure. The Luxalon® standard range of edge profiles can be used as perimeters.

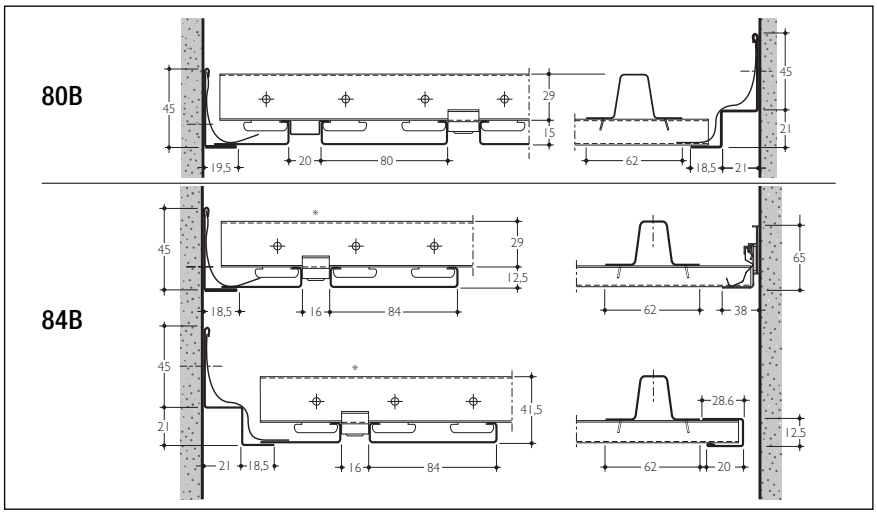


## MAXIMUM SPANS

See graphs on page 17 and 18.

## DIMENSIONS & WEIGHTS

* Based on panels installed on 3 or more carriers.
Panels from 250-1000 mm and > 6000 mm are available on request.

| Panel | Width (mm) | Module (mm) | Min. length (mm) | Max. length (mm) | Weight panels & carriers/m²* |
|---|---|---|---|---|---|
| 80B | 80 | 100 | 1000 | 6000 | 2.5 |
| 84B | 84 | 100 | 1000 | 6000 | 1.7 |

## MATERIAL REQUIREMENT PER M²

The required number of components depend on individual project requirements. Figures based on a ceiling installed on 3 or more carriers and submitted to a windload (pressure) of 1000 N/m². For corners, roof edges, special designs etc. wind pressure/suction shall be determined with due consideration to the local country's Standard Codes of Building Practice.

| | Unit | 80B exterior system | 84B exterior system |
|---|---|---|---|
| Panels | lm | 10 | 10 |
| U-shaped join profiles | lm | 10 | - |
| Carriers | lm | 0.77 / 1.25* | 0.71 |
| Carrier splice | pcs | 0.15 / 0.25* | 0.14 |
| Suspension | pcs | 1.77 / 2.13* | 2.13 |
| Locking clips | pcs | - / 1.25* | 7.1 |

** When used without joint profiles*

# 84C

## PANELS

The Luxalon® 84C Closed Ceiling system consists of box shaped panels (1) which can be easily clipped on a 84C carrier (2). The 84 mm wide panels feature a 24 mm wide flange that closes-off the 16 mm joint between the panels (module 100 mm). The 12.5 mm deep recessed joint gives a linear direction to the ceiling plane whilst being closed-off from the plenum. The panels are made to measure and can be supplied in any length up to 6000 mm.

## SUSPENSION

The panel carrier (2) is black and is provided with prongs to accommodate the panels in a standard module of 100 mm. Carriers have a standard length of 5000 mm.

A = Luxalon® Profix cantilever
B = carrier span
C = panel span
D = panel cantilever
E = Luxalon® Profix-carrier span

1 = 84C panel
2 = carrier
3 = screw washer
4 = reinforcement
5 = hanger
6 = top fixing
7 = threaded rod
8 = panel splice
9 = non-HD

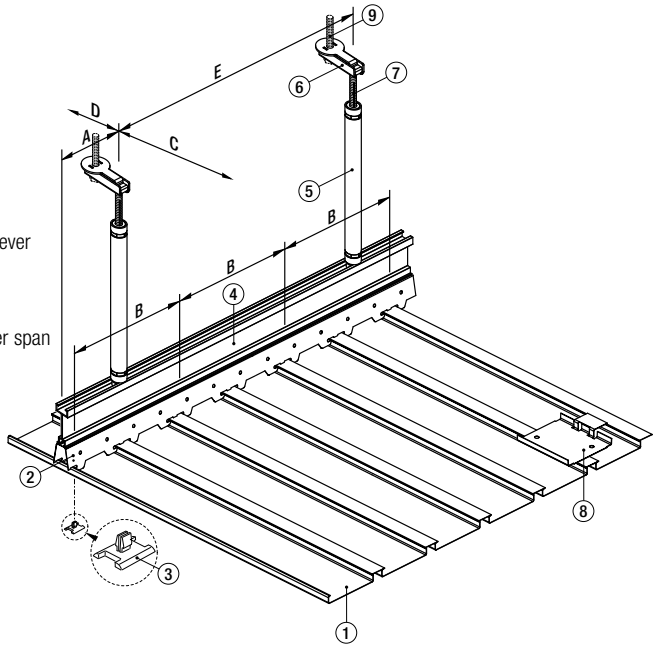


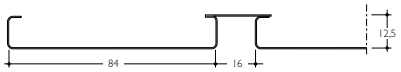


## CONSTRUCTION DETAILS

The Luxalon® standard range of edge profiles can be used as perimeters.

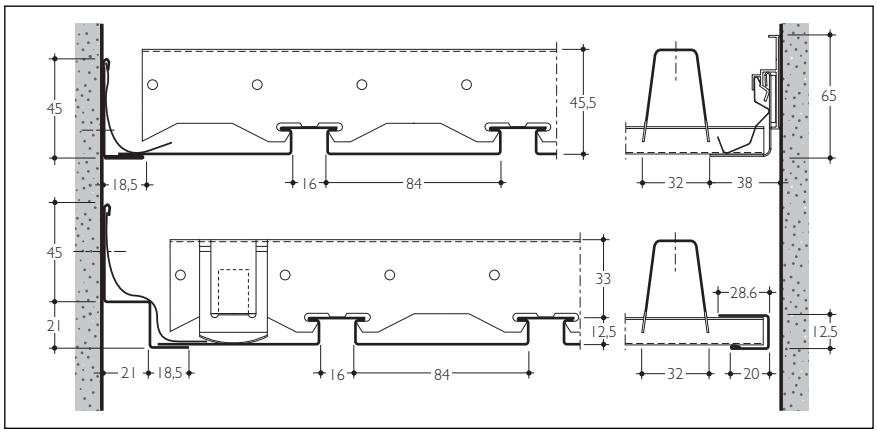


## MAXIMUM SPANS

See graphs on page 19.

## DIMENSIONS & WEIGHTS

* Based on panels installed on 3 or more carriers. The panels are made to measure in any length up to 6000 mm.
Panels > 6000 mm available on request.

| Panel | Width (mm) | Module (mm) | Min. length (mm) | Max. length (mm) | Weight panels & carriers/m²* Aluminium carrier |
|---|---|---|---|---|---|
| 84C | 84 | 100 | 1000 | 6000 | 2.1 kg |

## MATERIAL REQUIREMENT PER M²

The required number of components depend on individual project requirements. Figures based on a ceiling installed on 3 or more carriers and submitted to a windload (pressure) of 1000 N/m². For corners, roof edges, special designs etc. wind pressure/suction shall be determined with due consideration to the local country's Standard Codes of Building Practice.

| | Unit | 84C exterior system |
|---|---|---|
| Panels | lm | 10 |
| Carriers | lm | 0.625 |
| Carrier splice | pcs | 0.12 |
| Suspension | pcs | 3.0 |

# 75C, 150C, 225C

## PANELS

The Luxalon® Closed Ceiling system has a choice of three widths of panels (1). All three widths can be combined and easily clipped on a universal carrier (2). Panels can be joined by using the panel splice (8). Locking clips (9) for 150C and 225C are fitted crosswise on to the carrier, on top of the prongue in order to fully secure the panels and to create a ceiling able to withstand windloads.

## SUSPENSION

The panel carrier (2) is black, made of 0.95 mm thick stove enamelled aluminium and is provided with prongs to accommodate the panels in a width of 75, 150 or 225 mm. Carriers have a standard length of 5000 mm.

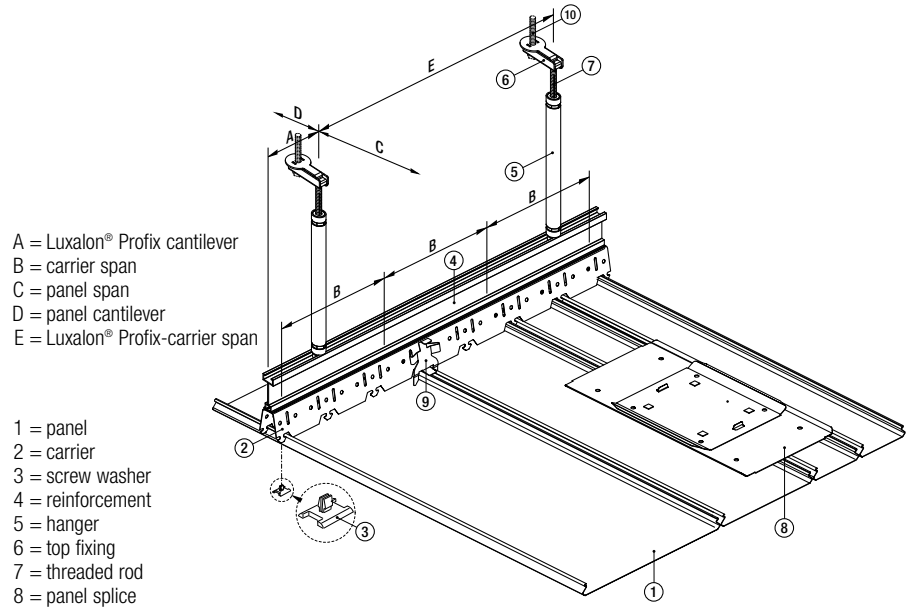


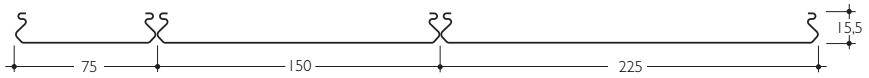


## CONSTRUCTION DETAILS

The neat closed joints present smooth uninterrupted appearance. By combining the narrow and wide panels (75,150 and 225 mm) on one universal carrier, various dimensional effects are possible, providing the designer unlimited possibilities.
The Luxalon® standard range of edge profiles can be used as perimeters.

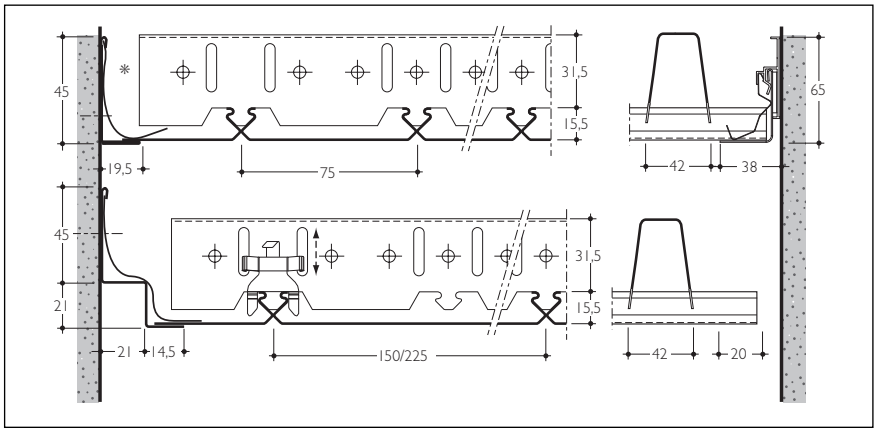


## MAXIMUM SPANS

See graphs on page 20.

## DIMENSIONS & WEIGHTS

* Based on panels installed on 3 or more carriers. The panels are made to measure in any length up to 6000 mm.
Panels > 6000 mm available on request.

| Panel | Module (mm) | Min. length (mm) | Max. length (mm) | Weight panels & carriers/m²* |
|---|---|---|---|---|
| 75C | 75 | 1000 | 6000 | 2.63 kg |
| 150C | 150 | 1000 | 6000 | 2.29 kg |
| 225C | 225 | 1000 | 6000 | 2.28 kg |

## MATERIAL REQUIREMENT PER M²

The required number of components depend on individual project requirements. Figures based on a ceiling installed on 3 or more carriers and submitted to a windload (pressure) of 1000 N/m². For corners, roof edges, special designs etc. wind pressure/suction shall be determined with due consideration to the local country's Standard Codes of Building Practice.

| | Unit | 75C | 150C | 225C |
|---|---|---|---|---|
| Panels | lm | 13.33 | 6.67 | 4.44 |
| Carriers | lm | 0.83 | 1.0 | 1.25 |
| Carrier splice | pcs | 0.16 | 0.2 | 0.25 |
| Locking clips | pcs | - | 6.67 | 5.55 |

# 300A Carrier

## PANELS

The Luxalon® 300A Panels are 290 mm wide and have a recessed joint of 10 mm width and a depth of 31 mm. The panels have straight 14 mm high upstands at the panel ends to provide rigidity and flatness to the panels. The small joint, in combination with the flange, creates a (visually) closed ceiling. Locking clips crosswise on every panel secure the panels to create a ceiling able to withstand windloads.

## SUSPENSION

The panel carrier is black, made of 0.95 mm thick aluminium and is provided with prongs to accommodate the panels. Carriers have a standard length of 4950 mm.

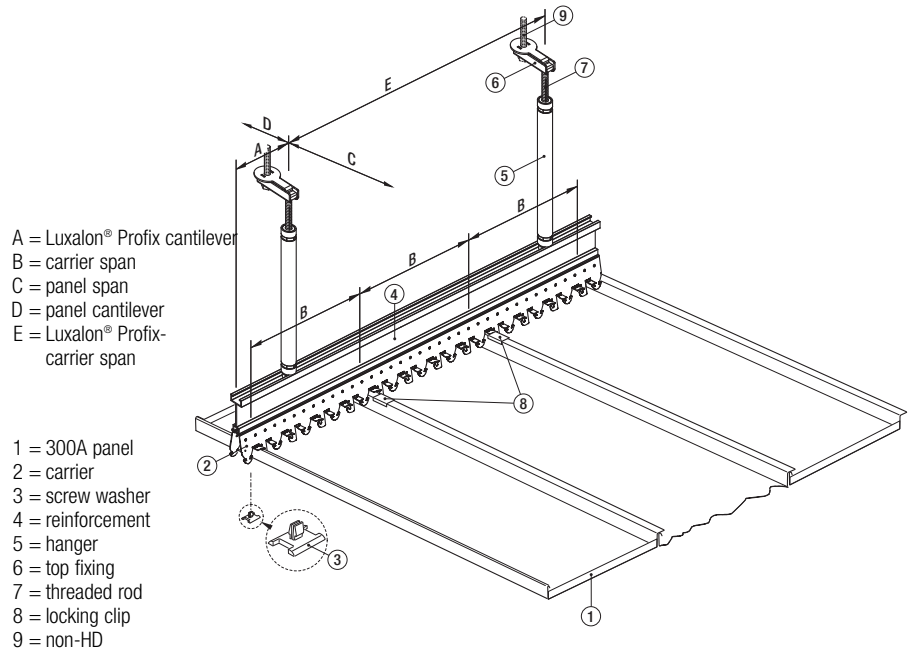


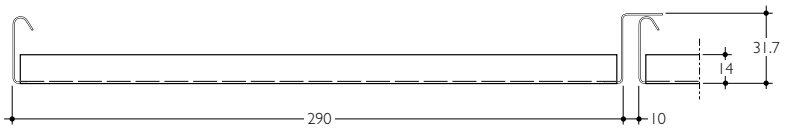


## CONSTRUCTION DETAILS

The Luxalon® standard range of edge profiles can be used as perimeters.

* Locking clips

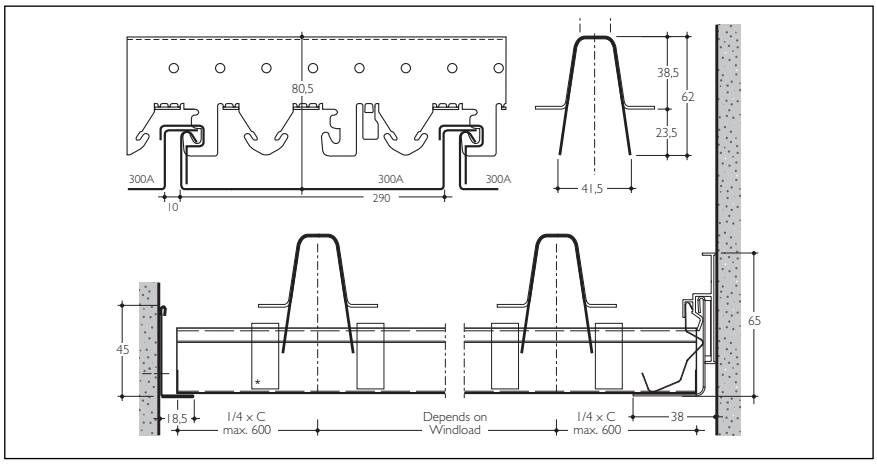


## MAXIMUM SPANS

See graphs on page 21.

## DIMENSIONS & WEIGHTS

Based on panels installed on 3 or more carriers. The panels are made to measure in any length up to 6000 mm. Panels from 800-1000 mm and > 6000 mm available on request.

| Panel | Width | Min. length | Max. length | Weight/m² |
|---|---|---|---|---|
| 300A | 300 | 1000 | 6000 | 3.7 kg |

## MATERIAL REQUIREMENT PER M²

The required number of components depend on individual project requirements. Figures based on a ceiling installed on 4 or more carriers and submitted to a windload (pressure) of 1500 N/m². For corners, roof edges, special designs etc. wind pressure/suction shall be determined with due consideration to the local country's Standard Codes of Building Practice.

| | Unit | 300A Carrier system |
|---|---|---|
| Panels | lm | 3.33 |
| Carrier | lm | 1.5 |
| Carrier splice | pcs | 0.3 |
| Suspension | pcs | 2.86 |
| Locking clips | pcs | 5.0 |

# 300C/L Carrier

## PANELS

The Luxalon® 300C/L Panels (1) are 300 mm wide and have resp. a V-joint or L-joint. All panels can simply be fixed on the carrier (2) by hanging one side of the panel on the prongs of the carrier and by then pressing the other side in place with an upward movement. An uncluttered monolithic ceiling appearance is achieved using the concealed 300C/300L carrier suspension system. The panels do not require any locking clips.

## SUSPENSION

The panel carrier is black, made of 0.95 mm thick aluminium and is provided with prongs to accommodate the panels. Carriers have a standard length of 4950 mm.

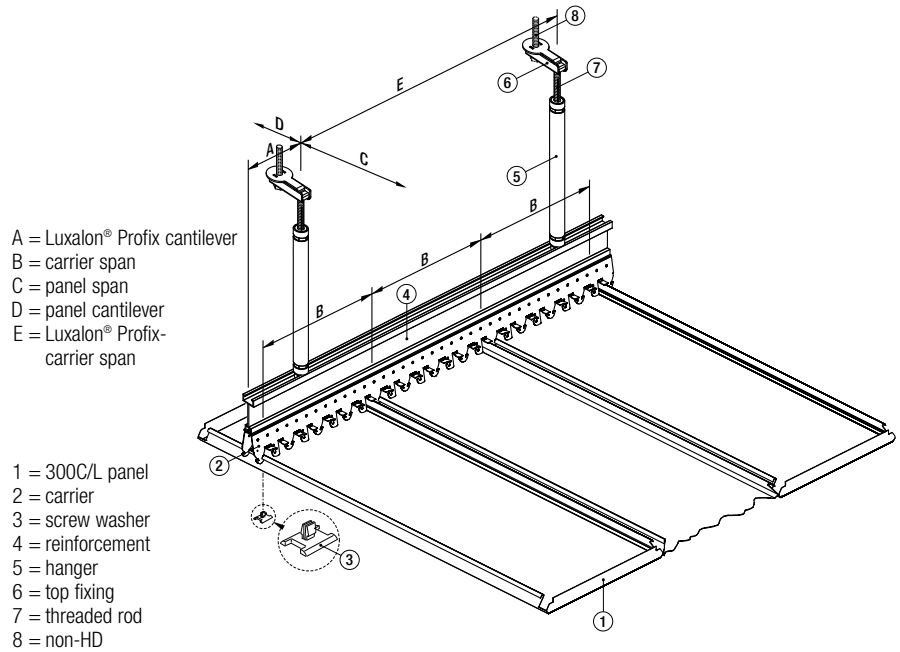


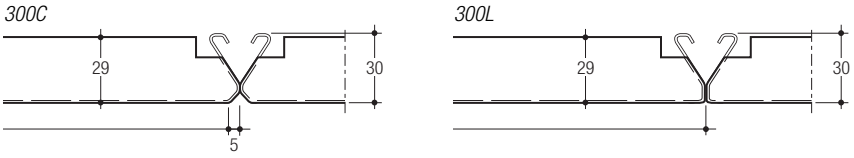


## CONSTRUCTION DETAILS

The Luxalon® standard range of edge profiles can be used as perimeters.

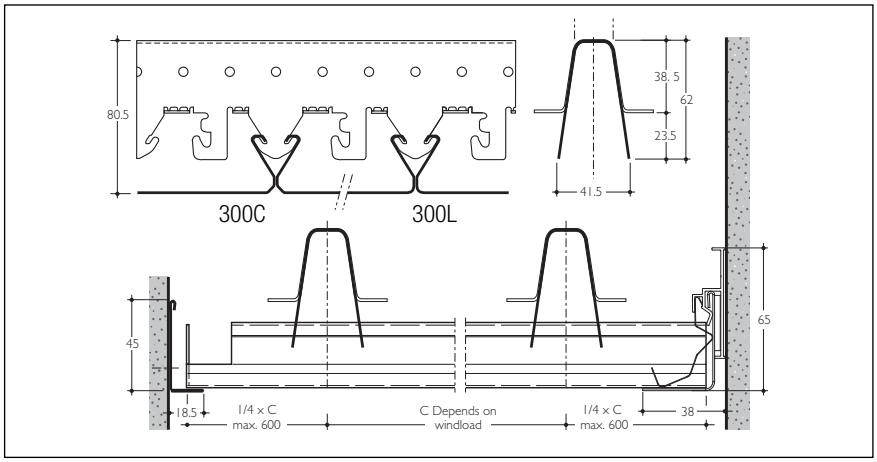


## MAXIMUM SPANS

See graphs on page 21.

## DIMENSIONS & WEIGHTS

Based on panels installed on 3 or more carriers. The panels are made to measure in any length up to 6000 mm. Panels from 600-1000 mm and > 6000 mm available on request.

| Panel | Width | Min. length | Max. length | Weight/m² |
|---|---|---|---|---|
| 300C/L | 300 | 1000 | 6000 | 3.7 kg |

## MATERIAL REQUIREMENT PER M²

The required number of components depend on individual project requirements. Figures based on a ceiling installed on 4 or more carriers and submitted to a windload (pressure) of 1500 N/m². For corners, roof edges, special designs etc. wind pressure/suction shall be determined with due consideration to the local country's Standard Codes of Building Practice.

| | Unit | 300C/L Carrier system |
|---|---|---|
| Panels | lm | 3.33 |
| Carrier | lm | 1.05 |
| Carrier splice | pcs | 0.21 |
| Suspension | pcs | 3.125 |

# 150F, 200F

## PANELS

The Luxalon® 150F/200F Ceiling system consists of 150 mm or 200 mm wide aluminium panels (1) which can simply be clipped into the prongs of a 150F or a 200F carrier (2). The panels can be joined by using the panel splice (8).

## SUSPENSION

The carrier (2) is black, made of 0.95 mm thick (for 150F) or 1.2 mm thick (for 200F) stove enamelled aluminium and is provided with prongs to accommodate the panels. Carriers have a standard length of 5000 mm and are connected by using the carrier splice (200F) or by sliding the ends of the carriers into each other (150F).

A = Luxalon® Profix cantilever
B = carrier span
C = panel span
D = panel cantilever
E = Luxalon® Profix-carrier span

1 = 150F/200F panel
2 = carrier
3 = screw washer
4 = reinforcement
5 = hanger
6 = top fixing
7 = threaded rod
8 = panel splice
9 = U-bracket
10 = non-HD

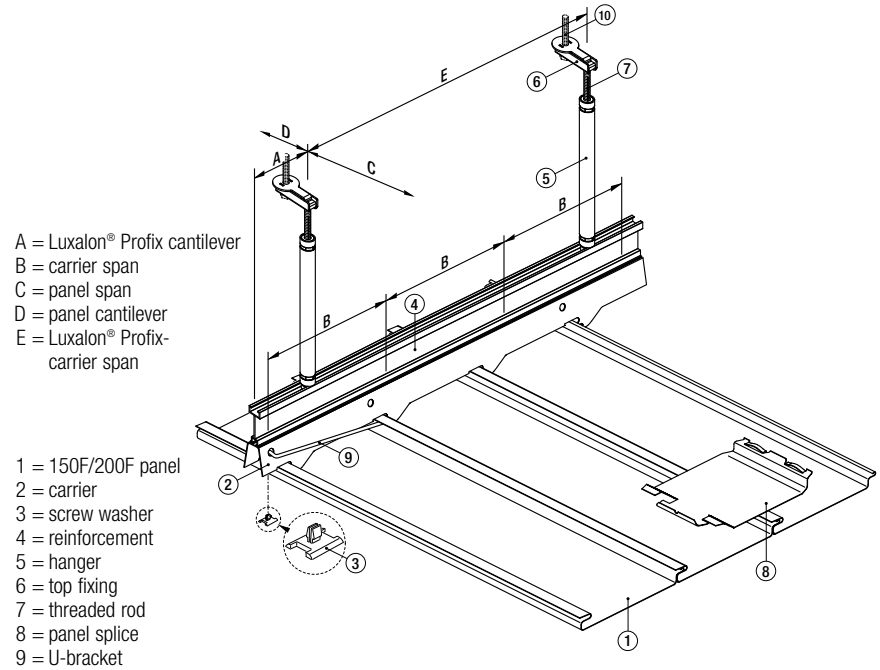


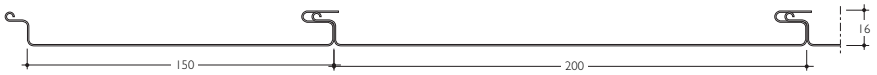


## CONSTRUCTION DETAILS

The neat closed joints present a smooth uninterrupted appearance. Panels can be secured to the carrier by using U-brackets, providing a very rigid system which is able to withstand extreme wind suction (over 2000 N/m²). For installations requiring combinations of 150F and 200F panels a screw clamp is available.
Curved ceilings can be achieved by using a curved subconstruction with screw clamps. The Luxalon® standard range of edge profiles can be used as perimeters.

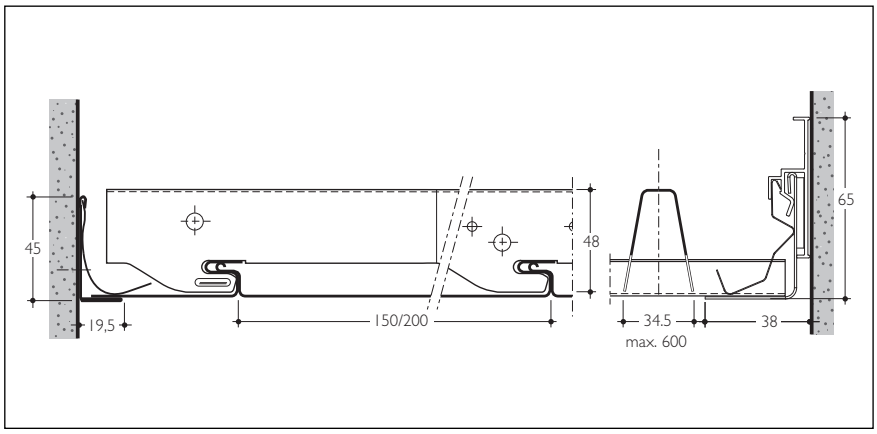


## MAXIMUM SPANS

See graphs on page 22 and 23.

## DIMENSIONS & WEIGHTS

* Based on panels installed on 3 or more carriers.
Panels from 250-1000 mm and > 6000 mm are available on request.

| Panel | Width (mm) | Module (mm) | Min. length (mm) | Max. length (mm) | Weight panels & carriers/m²* |
|---|---|---|---|---|---|
| 150F | 150 | 150 | 1000 | 6000 | 2.8 kg |
| 200F | 200 | 200 | 1000 | 6000 | 3.1 kg |

## MATERIAL REQUIREMENT PER M²

The required number of components depend on individual project requirements. Figures based on a ceiling installed on 3 or more carriers and submitted to a windload (pressure) of 1500 N/m². For corners, roof edges, special designs etc. wind pressure/suction shall be determined with due consideration to the local country's Standard Codes of Building Practice.

| | Unit | 150F system | 200F system |
|---|---|---|---|
| Panels | lm | 6.67 | 5 |
| Carrier | lm | 0.61 | 0.65 |
| Carrier splice | pcs | 0.12 | 0.13 |
| Suspension | pcs | 3.3 | 3.45 |
| U-bracket (Optional) | pcs | 2.03 | 1.63 |

# 70U

## PANELS

The Luxalon® Exterior 70U Ceiling system consists of box shaped, 70 mm wide, 25 mm deep, 0.8 mm thick aluminium panels (1) which can be easily clipped on a 70U carrier (2). Panels can be joined by using the panel splice (8). Locking clips (9) are fitted on to the carrier between the panels in order to fully secure the panels.

## SUSPENSION

The panel carrier (2) is black, made of 0.95 mm thick stove enamelled aluminium and is provided with prongs to accommodate the panels in a standard module of 100 mm. Carriers have a standard length of 5000 mm.

A = Luxalon® Profix cantilever
B = carrier span
C = panel span
D = panel cantilever
E = Luxalon® Profix-carrier span

1 = 70U panel
2 = carrier
3 = screw washer
4 = reinforcement
5 = hanger
6 = top fixing
7 = threaded rod
8 = panel splice
9 = locking clip
10 = non-HD

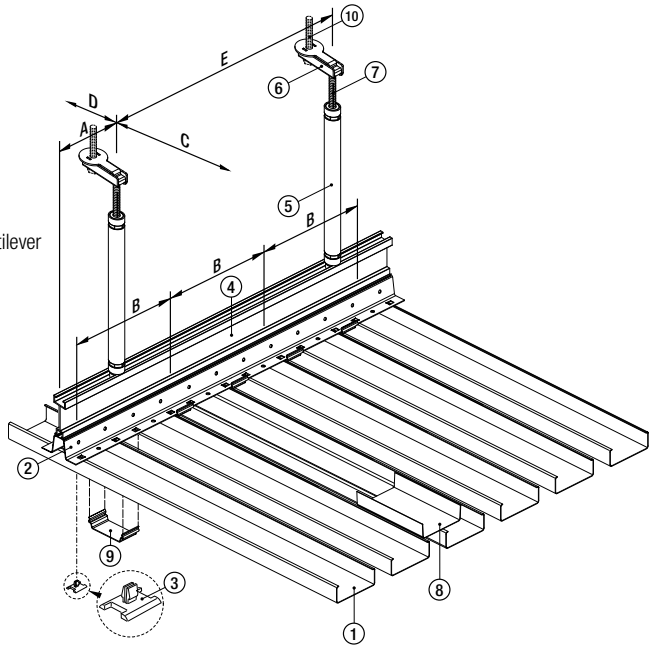


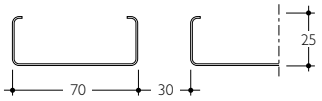


## CONSTRUCTION DETAILS

Flexible carriers are available in order to create a curved ceiling.
The Luxalon® standard range of edge profiles can be used as perimeters.

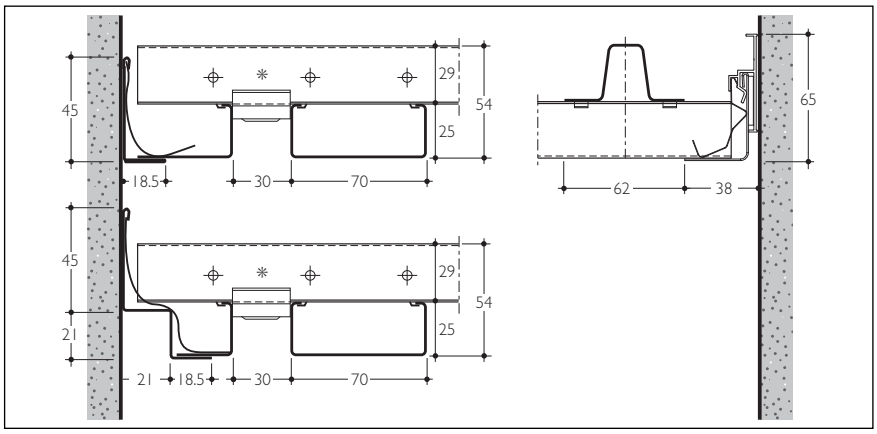


## MAXIMUM SPANS

See graphs on page 24.

## DIMENSIONS & WEIGHTS

* Based on panels installed on 3 or more carriers. The panels are made to measure in any length up to 6000 mm.
Panels > 6000 mm available on request.

| Panel 70U | Width (mm) | Height (mm) | Module (mm) | Min. length (mm) | Max. length (mm) | Weight panels & carriers/m²* | |
|---|---|---|---|---|---|---|---|
| | | | | | | Steel Carrier | Alu Carrier |
| Alu 0.8 | 70 | 25 | 100 | 1000 | 6000 | 3.27 kg | 2.9 kg |

## MATERIAL REQUIREMENT PER M²

The required number of components depend on individual project requirements. Figures based on a ceiling installed on 3 or more carriers and submitted to a windload (pressure) of 1000 N/m². For corners, roof edges, special designs etc. wind pressure/suction shall be determined with due consideration to the local country's Standard Codes of Building Practice.

| | Unit | 70U Ceiling system |
|---|---|---|
| Panels | lm | 10 |
| Carrier | lm | 0.67 |
| Carrier splice | pcs | 0.13 |
| Suspension | pcs | 2.13 |
| Locking clips | pcs | 6.7 |

# 185U

## PANELS

The Luxalon® Exterior 185U Ceiling system consists of box shaped, 185 mm wide, 0.95 mm thick aluminium panels (1) which can be easily clicked on the 185U carrier (2). Panels can be joined by using the panel splice (8). Between the panels there is an open joint of 15 mm.

## SUSPENSION

The carrier (2) is black, made of 0.95 mm thick stove enamelled aluminium and is provided with prongs to accommodate the panels in a module of 200 mm. Carriers have a standard length of 5000 mm.

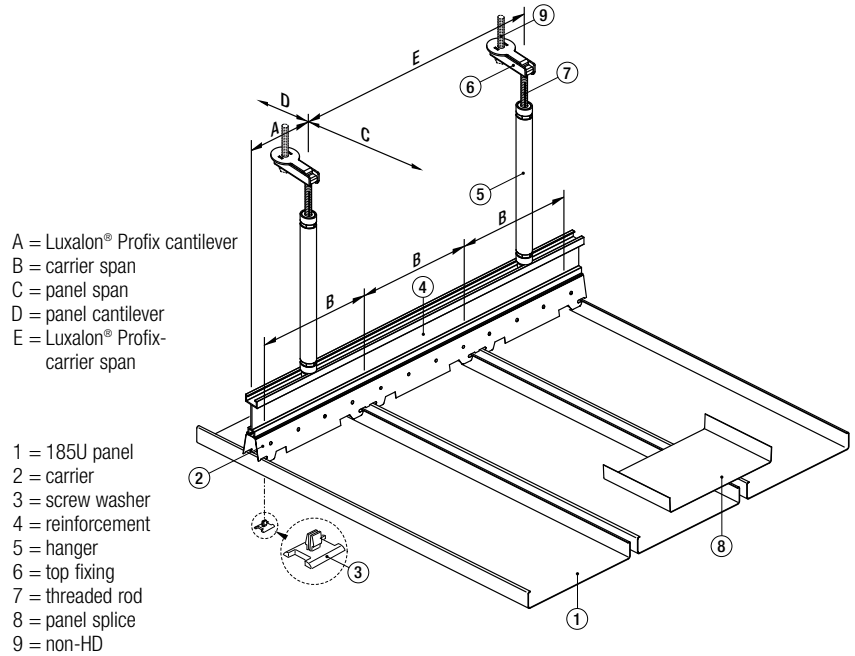


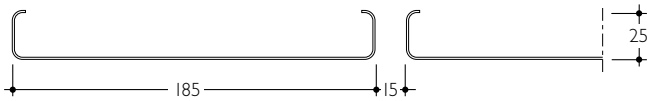


## CONSTRUCTION DETAILS

Strong, robust, panels made of 0.95 mm aluminium provide good resistancy against e.g. vandalism.
The Luxalon® standard range of edge profiles can be used as perimeters.

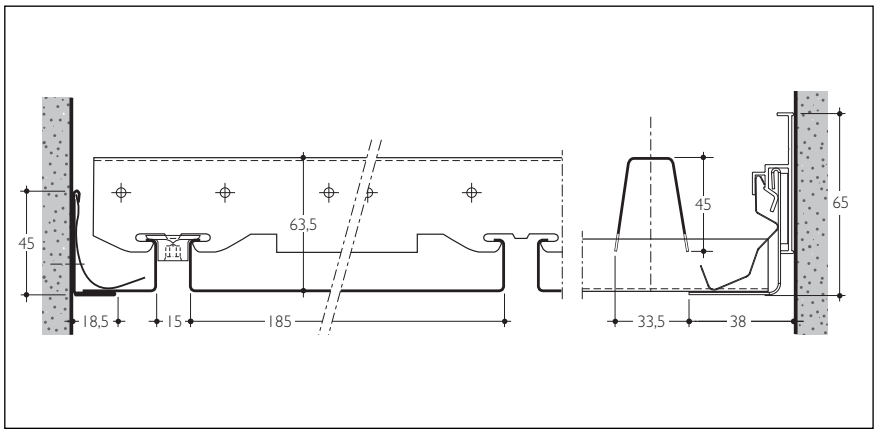


## MAXIMUM SPANS

See graphs on page 24.

## DIMENSIONS & WEIGHTS

* Based on panels installed on 3 or more carriers.
Panels from 250-1000 mm and > 6000 mm are available on request.

| Panel | Width (mm) | Module (mm) | Min. length (mm) | Max. length (mm) | Weight panels & carriers/m²* |
|---|---|---|---|---|---|
| 185U | 185 | 200 | 1000 | 6000 | 3.4 kg |

## MATERIAL REQUIREMENT PER M²

The required number of components depend on individual project requirements. Figures based on a ceiling installed on 3 or more carriers and submitted to a windload (pressure) of 1500 N/m². For corners, roof edges, special designs etc. wind pressure/suction shall be determined with due consideration to the local country's Standard Codes of Building Practice.

| | Unit | 185U Carrier system |
|---|---|---|
| Panels | lm | 5 |
| Carrier | lm | 0.61 |
| Carrier splice | pcs | 0.12 |
| Suspension | pcs | 4.55 |

# V100

## PANELS

The Luxalon® V100 Screen Ceiling system is a lightweight, floating ceiling. The panels (1) are 101 mm high (V100) and can easily be clipped on the carrier (2). Locking clips made of clear PVC (8) are used for securing the V100 panels. Looking at the ceiling in a minimum angle of approximately 45 degrees, the ceiling has a closed appearance.

## SUSPENSION

The panel carriers (2) are white or black, made of 0.95 mm thick aluminium and provided with prongs to accommodate the panels in a module of 100 mm, 150 mm or 200 mm. Carriers have a standard length of 5000 mm.

A = Luxalon® Profix cantilever
B = carrier span
C = panel span
D = panel cantilever
E = Luxalon® Profix-carrier span

1 = V100 panel
2 = carrier
3 = screw washer
4 = reinforcement
5 = hanger
6 = top fixing
7 = threaded rod
8 = locking clip
9 = non-HD

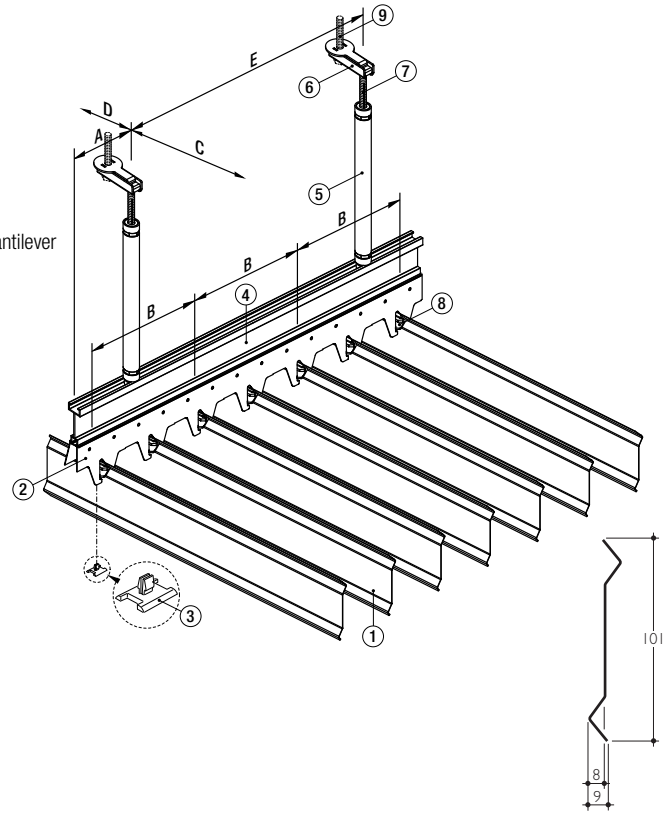


## CONSTRUCTION DETAILS

The Luxalon® V100 Screen Ceiling system allows for easy demounting of the panels. Each panel can be easily removed and replaced by hand. Even without removing the panels, the system allows for easy and full access to services and installations in the plenum.

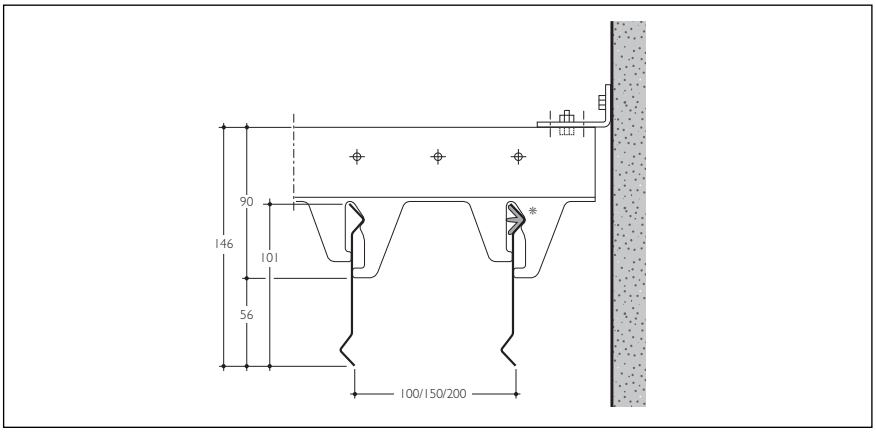


## MAXIMUM SPANS

See graphs on page 25.

## DIMENSIONS & WEIGHTS

Panels from 250 - 1000 mm and > 6000 mm are available on request. Weights are based on a system installed on 3 or more fixing points.

| Panel | Height | Min. length | Max. length | Weight/m² incl. carrier | | |
|---|---|---|---|---|---|---|
| | | | | M 100 | M150 | M 200 |
| V100 | 101 | 1000 | 6000 | 2.1 kg | 1.5 kg | 1.1 kg |

## MATERIAL REQUIREMENT PER M²

Other accessories depend on individual project requirements.
Figures are based on maximum spans and on using 3 or more fixing points.
At 500 N/m² 3 or more carriers are used.
For corners, roof edges, special designs etc. wind pressure/suction shall be determined with due consideration to the local country's Standard Codes of Building Practice.

| | Unit | M 100 | M 150 | M 200 |
|---|---|---|---|---|
| Panels | lm | 10 | 6.67 | 5 |
| Carriers | lm | 0.48 | 0.48 | 0.48 |
| Carrier splice | pcs | 0.10 | 0.10 | 0.10 |
| Suspension | pcs | 0.77 | 0.77 | 0.77 |
| Locking clips | pcs | 4.8 | 3.2 | 2.4 |

# Façade systems as Ceiling application

Hunter Douglas' QuadroClad™ Panels and Multiple Panel Façade systems are both developed as a façade application but are also suitable for exterior ceilings. Especially when extremely large panel sizes are desired, or if façade and exterior ceiling should form a uniform view in the architectural design, these systems are excellent solutions. Find in dedicated product brochures all details regarding these products.

## QUADROCLAD™ PANELS

- Large panel sizes up to 1.500 mm x 10.000 mm
- Extremely flat panels with low weight (6 kg/m²)
- Panels available in curved, cranked and triangular shapes
- Wide choice of finishes (Luxacote®, PVDF and anodized)
- Tightly controlled joint widths
- Quick installation with minimum fixings to structure

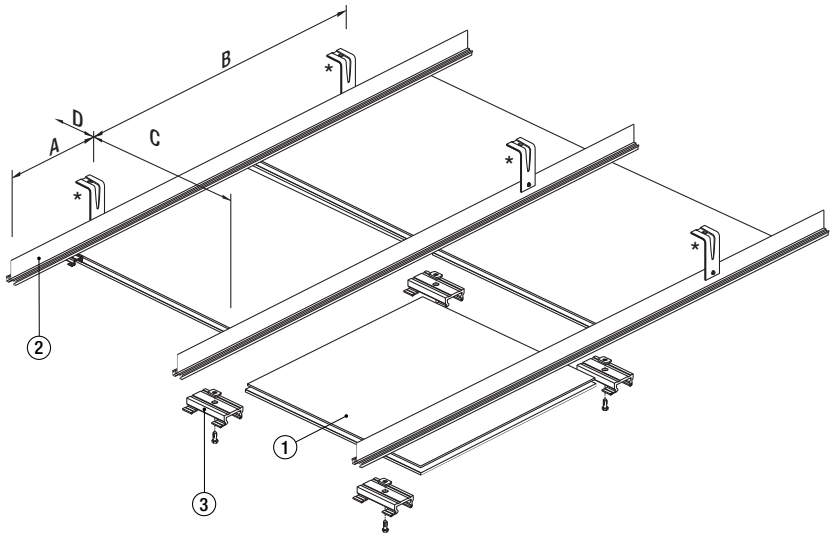


A = fixing rail cantilever
B = fixing rail span
C = panel span
D = panel cantilever

1 = panel
2 = fixing rail
3 = panel bracket
** Non Hunter Douglas*

## MULTIPLE PANEL FAÇADE

- Large panel sizes up to 600 mm x 6.000 mm
- Wide choice of finishes (Luxacote®, PVDF and anodized)
- The neat closed joints present a smooth uninterrupted appearance
- Quick installation with minimum fixings to structure

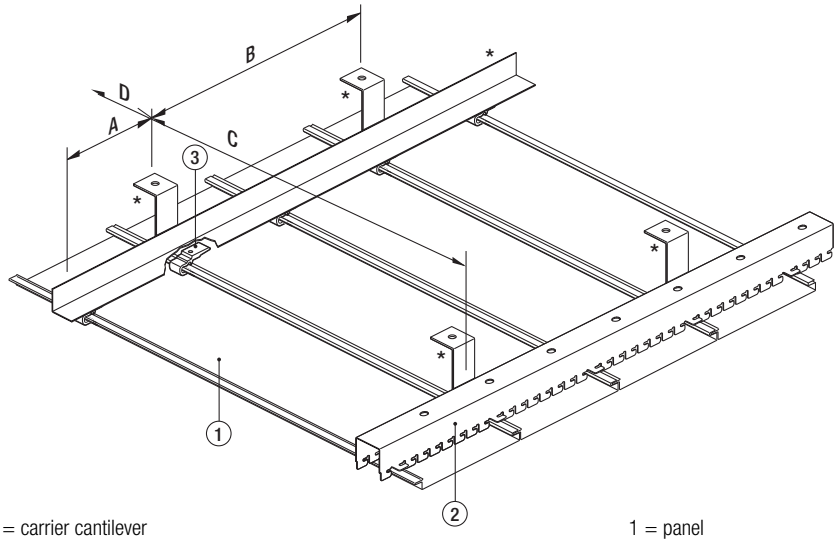


A = carrier cantilever
B = carrier span
C = panel span
D = panel cantilever

1 = panel
2 = carrier (for panels up to 400 mm width)
3 = panel clamp (for all panels)
** Non Hunter Douglas*

# Edge solutions

### LUXALON® CLICK-IN PROFILE

The Luxalon® Click-In Profile is a practical and esthetical edge solution specially developed for Luxalon® Exterior Ceilings. After fixing the Border profile (1) and installing the ceiling panels, the last thing to do is click-in the Edge profile (3). The click-in profile can be used together with any of the L or W shaped edge profiles. In case of maintenance the Edge profile can be removed before demounting the ceiling panels.

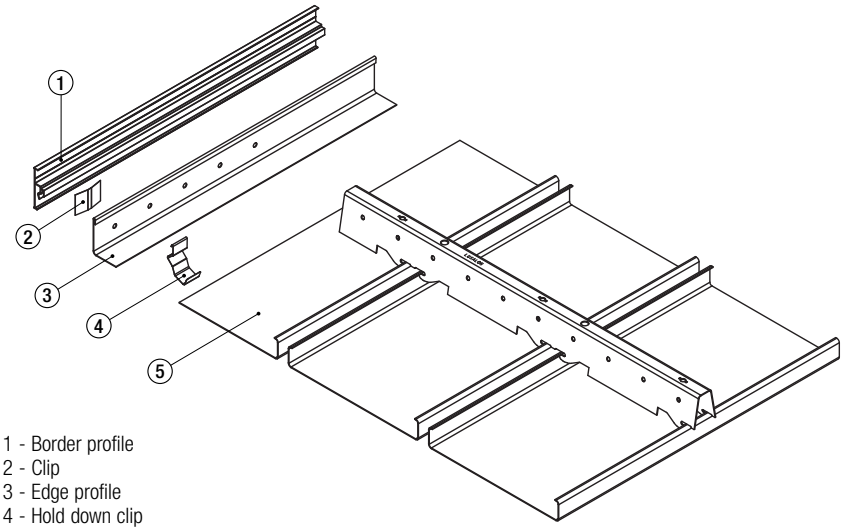


1 - Border profile
2 - Clip
3 - Edge profile
4 - Hold down clip
5 - Adapter panel

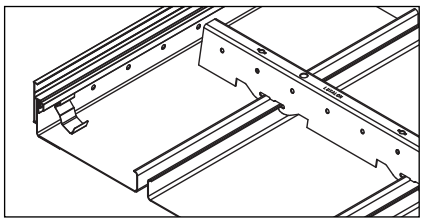

Mounted system

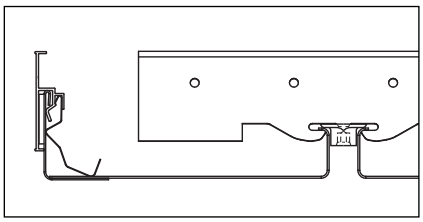

Side view

### EDGE PROFILES

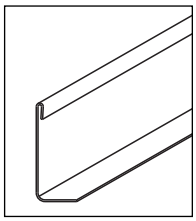

Wall L-profile Alu
(45 x 18.5)

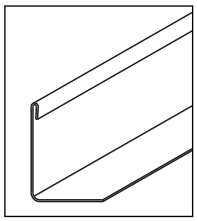

Wall L-profile Alu
(45 x 32.5)

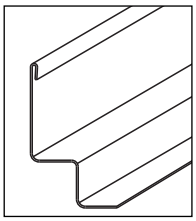

Wall W-profile Alu
(45 x 21 x 21 x 18.5)

# Specifications

## LUXALON® PROFIX

Luxalon® Profix is a suspension system made by Hunter Douglas expressly for exterior applications. A cost- and time-saving tool, the system simplifies installation and provides safety and reliability, even when faced with strong wind loads.

Luxalon® Profix consists of:

- A strengthening profile; reinforcing our carriers, creating a bigger span and therefore saves on suspension material and labour (less holes to drill)
- a top fixing; allowing easy mounting of the hanger
- a hanger; adaptable in length and resisting high wind forces

## MINIMUM AND MAXIMUM PLENUM HEIGHT WITH LUXALON® PROFIX

Using the Luxalon® Profix suspension system provides the benefit of a wide variety in the preferring plenum height. Minimum plenum height is 250 mm, maximum is 1.250 mm (including carrier and reinforcement).

The hangers are available in 10 different lengths which vary between 200 and 1.100 mm, in steps of 100 mm (200, 300, 400 mm etc.). An individual Profix hanger provides the possibility to vary in length. Each hanger can be adjusted in length + or - 50 mm.

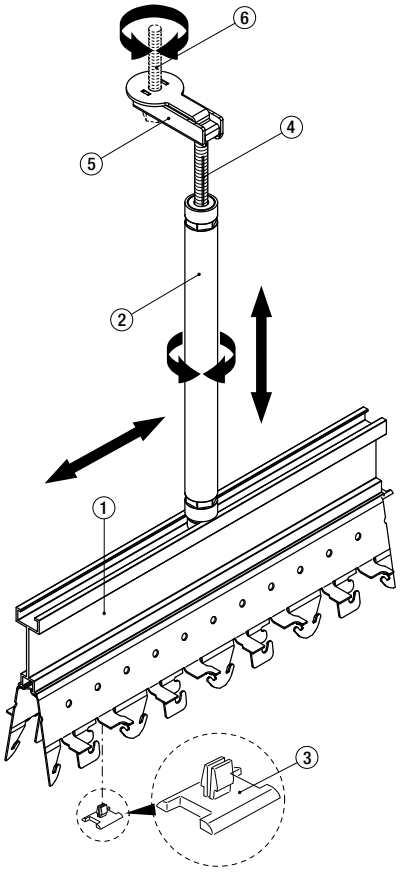


1 = reinforcement
2 = hanger
3 = screw washer + screw
4 = threaded rod
5 = top fixing
6 = non-HD

## SYSTEM SPECIFICATIONS IN GENERAL

Luxalon® Exterior Ceiling panels are made to measure with a standard maximum length of 6.000 mm. The recyclable, lightweight, and strong aluminium panels can be joined by using the panel splice. The black aluminium panel carrier is provided with prongs to accommodate the panels, has a standard length of 5.000 mm, and is connected by using the carrier splice.

Locking clips are fitted crosswise onto every panel, adjacent to the carriers, in order to fully secure the panels and create a ceiling able to withstand the strongest wind loads. The carrier can be suspended at centers determined by the wind loading graphs, using a rigid levelled suspension system and the screw washer to isolate dissimilar metals.

| System specifications | System Panel width (mm) | Join width (mm) | Mix different sizes | Curved | Interior applic. available | Acces to plenum | Luxalon® Profix | Luxacote® |
|---|---|---|---|---|---|---|---|---|
| 84R | 84 | 16* | | •** | • | • | • | • |
| 80B | 80 | 20* | | • | • (Multi panel system) | • | • | • |
| 84B | 84 | 16 | | • | • | • | • | • |
| 84C | 84 | 16 | | | • | • | • | • |
| 75C, 150C, 225C | 75, 150, 225 | - | • | | • | • | • | • |
| 300C | 300 | - | | • | • | • | • | • |
| 300A | 290 | 10 | | | • | • | • | • |
| 300L | 300 | - | | | • | • | • | • |
| 150, 200F | 150, 200 | - | • | • | | | • | • |
| 70U | 70 | 30 | | • | • | • | • | • |
| 185U | 185 | 15 | | | | • | • | • |
| V100 | 100 | Module 100, 150 or 200 | | | • (V100, V200) | • | • | On request |

*Join profiles are available and provide a visually closed ceiling
** Panel can also be curved

# Luxalon® ProFix Calculations

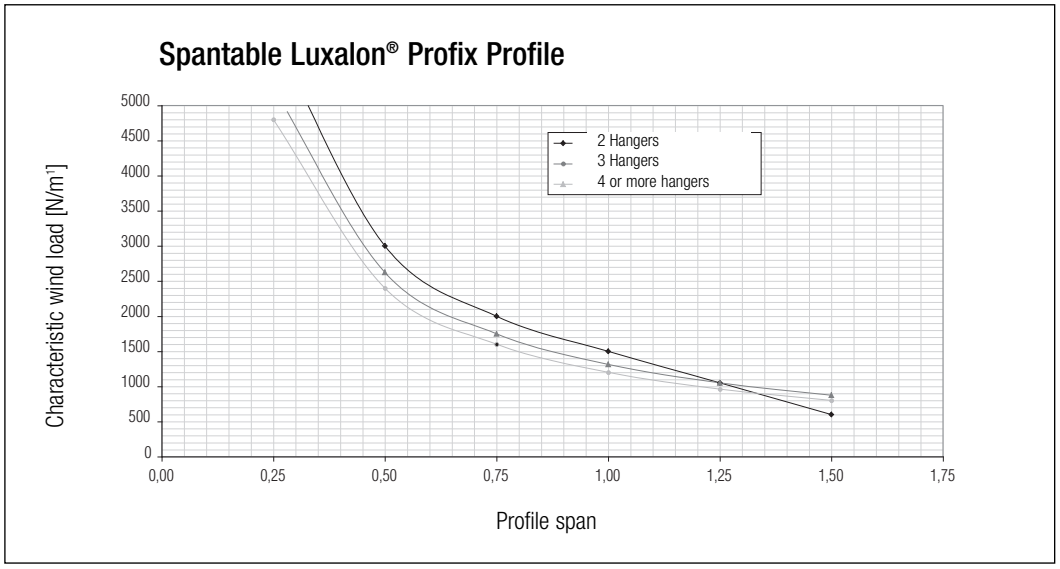


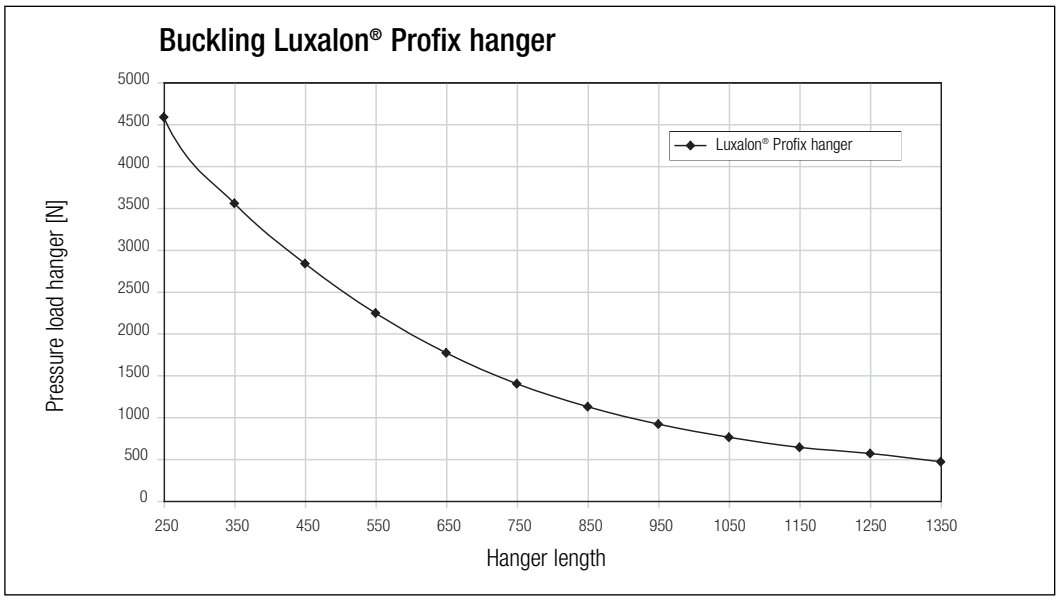


**- Profile span (x)**
The profile span, in relation to the wind load (pressure or suction), can be calculated from the graph above. At 1.000 N/m¹ the profile span should be 1.200 mm (4 or more hangers).

**- Buckling load on the hangers**
Before establishing the buckling load on the hangers, the load per hanger is to be determined by applying one of the following formulas:

| Number of hangers | Calculation of 'pressure load per hanger' |
|---|---|
| 4 per full profile length (1500 mm c.t.c.) | 1.1 q x profile span (x) in m |
| 5 per full profile length (1150 mm c.t.c.) | 1.143 q x profile span (x) in m |
| 6 per full profile length (900 mm c.t.c.) | 1.132 q x profile span (x) in m |

*q = pressureload in N/m¹ (uniformly distributed loads on the Luxalon® Profix profile)*

The maximum allowed hanger length in relation to the determined pressure load on the hanger can be read from the graph above in the same way as the profile span. At 1.000 N pressure load the maximum hanger length should be 900 mm.

*Note: For corners, roof edges, special designs etc. wind pressure/suction shall be determined with due consideration to the relevant local country's Standard Codes of Building Practice.*

# Maximum Spans

## 84R

**- Panel span (c)**
The panel spans, in relation to the wind load (pressure or suction), can be calculated from the graph adjacent.
At 1.000 N/m² the panel span should be 900 mm (84R + open joint on 3 or more carriers).

**- Carrier span (b)**
Before establishing the fixing distance of the carriers, the load per lineal meter carrier is to be determined by applying one of the following formulas:

| Panels installed on: | Calculation of 'load per lineal meter carrier' |
|---|---|
| 2 carriers | 0.5 q x panel span (C) in m |
| 3 carriers | 1.25 q x panel span (C) in m |
| 4 or more | 1.15 q x panel span (C) in m |

*q = windload in N/m² (uniformly distributed loads)*

The carrier span (fixing distance) (B) can be read from the graph besides in the same way as the panel span.

*Note: For corners, roof edges, special designs etc. wind pressure/suction shall be determined with due consideration to the relevant local country's Standard Codes of Building Practice.*

*When join profiles are used the max. admissible panelspan is 800 mm, irrespective to the windload*

**Design chart of 84R panel with locking clip**

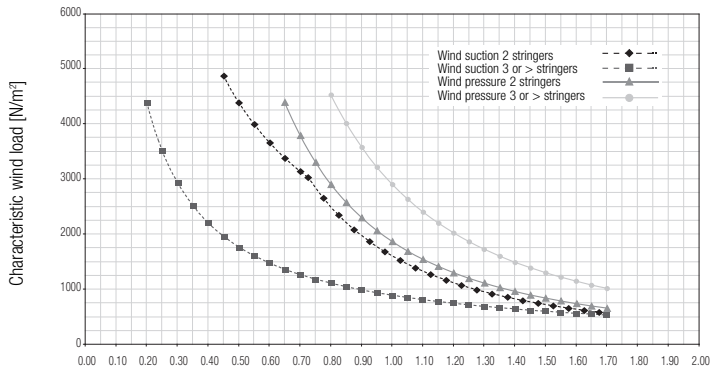


**Design chart of 84R panel with U-join profile**

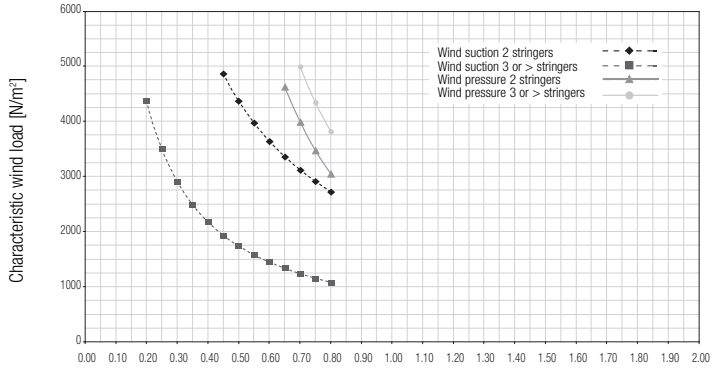


**Design chart of 84R panel with V5-join profile**

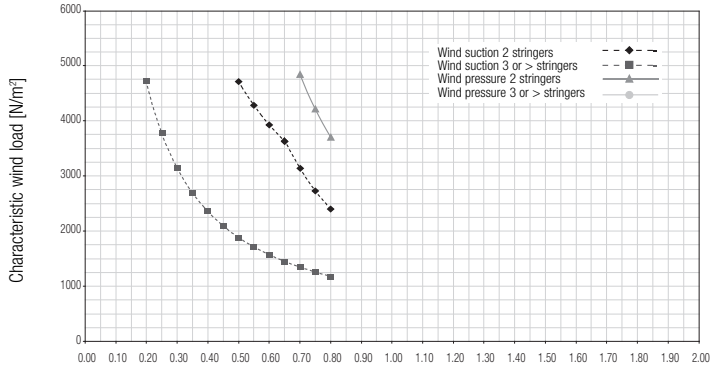


**Design chart of carrier 84R**

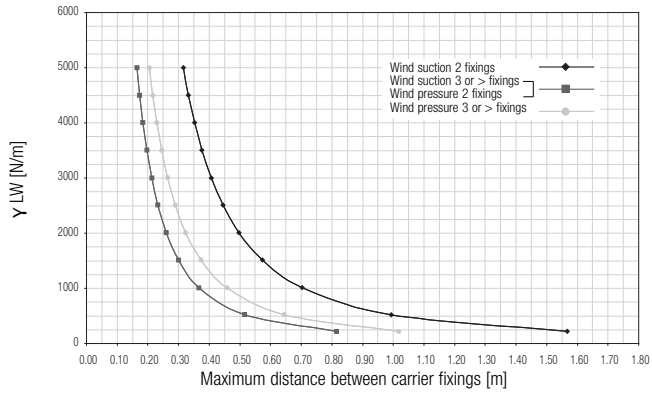

# Maximum Spans

## 80B

**- Panel span (c)**
The panel spans, in relation to the wind load (pressure or suction), can be calculated from the graph adjacent.
At 1.000 N/m² the panel span should be 900 mm (on 3 or more carriers).

**- Carrier span (b)**
Before establishing the fixing distance of the carriers, the load per lineal meter carrier is to be determined by applying one of the following formulas:

| Panels installed on: | Calculation of 'load per lineal meter carrier' |
|---|---|
| 2 carriers | 0.5 q x panel span (C) in m |
| 3 carriers | 1.25 q x panel span (C) in m |
| 4 or more | 1.15 q x panel span (C) in m |

*q = windload in N/m² (uniformly distributed loads)*

The carrier span (fixing distance) (B) can be read from the graph besides in the same way as the panel span.

*Note: For corners, roof edges, special designs etc. wind pressure/suction shall be determined with due consideration to the relevant local country's Standard Codes of Building Practice.*

*When join profiles are used the max. admissible panelspan is 800 mm, irrespective to the windload*

**Design chart of 80B panel with clip**

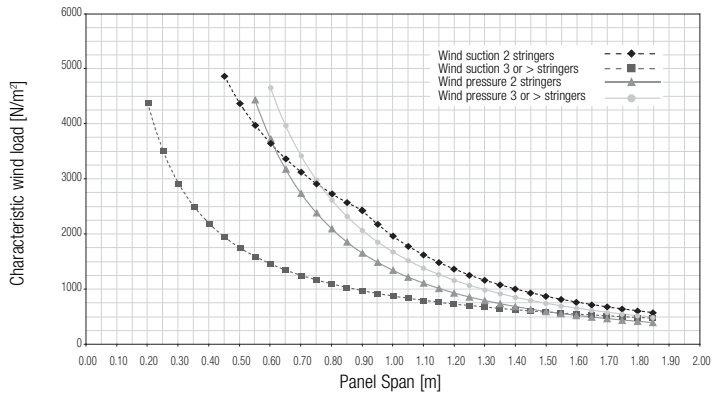


**Design chart of 80B panel with join profile**

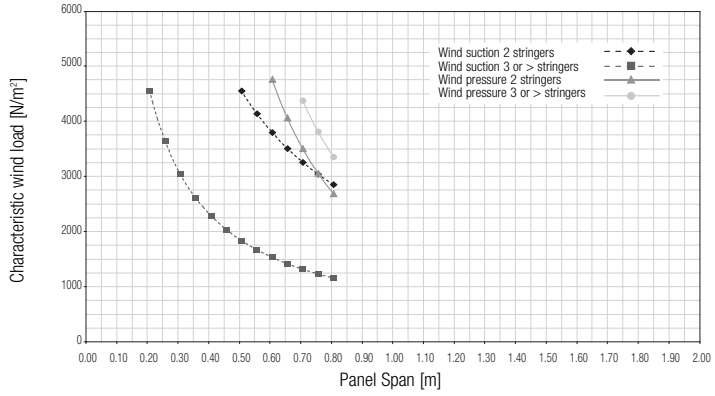


**Design chart of carrier 80B**

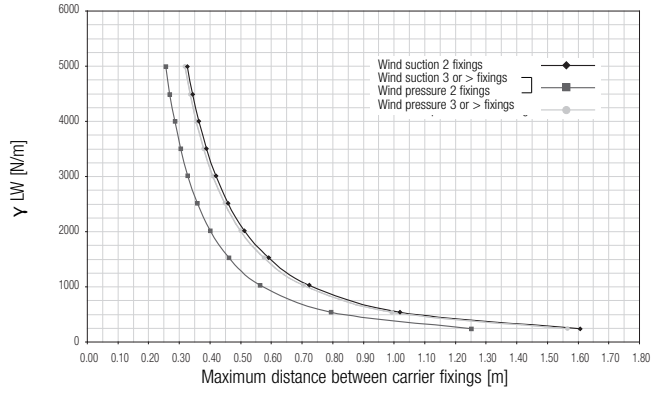

# Maximum Spans

## 84B

**- Panel span (c)**
The panel spans, in relation to the wind load (pressure or suction), can be calculated from the graph adjacent.
At 1.000 N/m² the panel span should be 1.100 mm (on 3 or more carriers).

**- Carrier span (b)**
Before establishing the fixing distance of the carriers, the load per lineal meter carrier is to be determined by applying one of the following formulas:

| Panels installed on: | Calculation of 'load per lineal meter carrier' |
|---|---|
| 2 carriers | 0.5 q x panel span (C) in m |
| 3 carriers | 1.25 q x panel span (C) in m |
| 4 or more | 1.15 q x panel span (C) in m |

*q = windload in N/m² (uniformly distributed loads)*

The carrier span (fixing distance) (B) can be read from the graph besides in the same way as the panel span.

*Note: For corners, roof edges, special designs etc. wind pressure/suction shall be determined with due consideration to the relevant local country's Standard Codes of Building Practice.*

**Design chart of 84B panel**

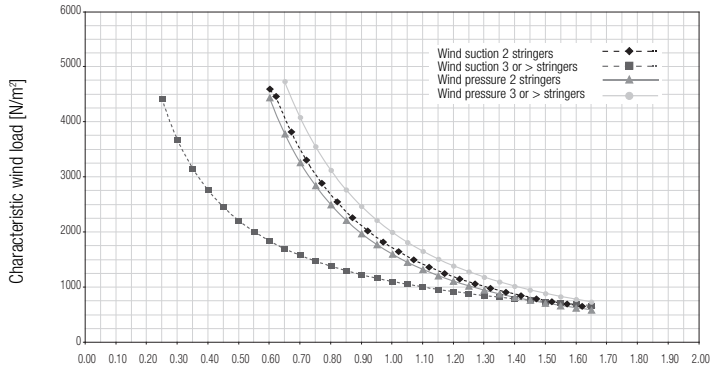


**Design chart of carrier 84B**

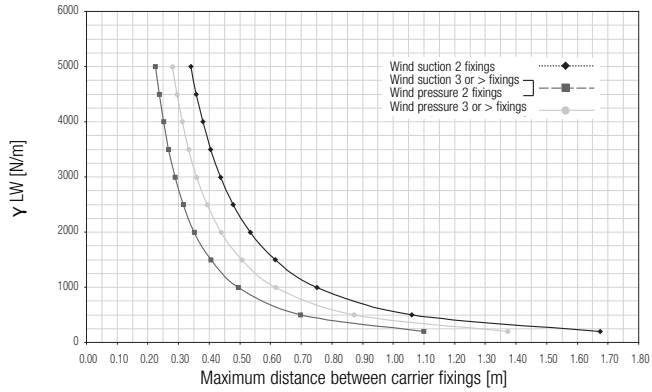

# Maximum Spans

## 84C

**- Panel span (c)**
The panel spans, in relation to the wind load (pressure or suction), can be calculated from the graph adjacent.
At 1.000 N/m² the panel span should be 600 mm (on 3 or more carriers).

**- Carrier span (b)**
Before establishing the fixing distance of the carriers, the load per lineal meter carrier is to be determined by applying one of the following formulas:

| Panels installed on: | Calculation of 'load per lineal meter carrier' |
|---|---|
| 2 carriers | 0.5 q x panel span (C) in m |
| 3 carriers | 1.25 q x panel span (C) in m |
| 4 or more | 1.15 q x panel span (C) in m |

*q = windload in N/m² (uniformly distributed loads)*

The carrier span (fixing distance) (B) can be read from the graph besides in the same way as the panel span.

*Note: For corners, roof edges, special designs etc. wind pressure/suction shall be determined with due consideration to the relevant local country's Standard Codes of Building Practice.*

**Design chart of 84C panel**

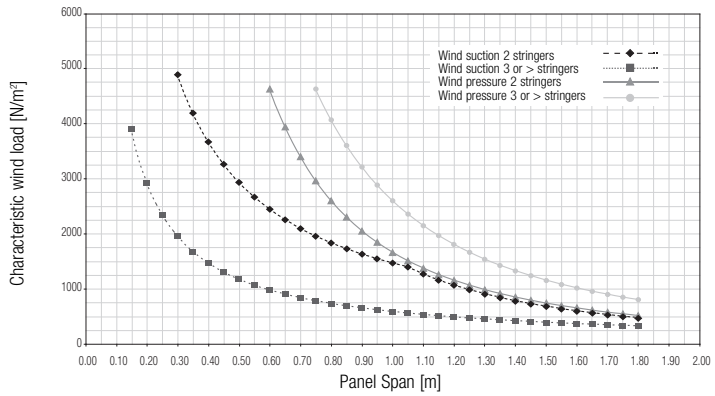


**Design chart of carrier 84C**

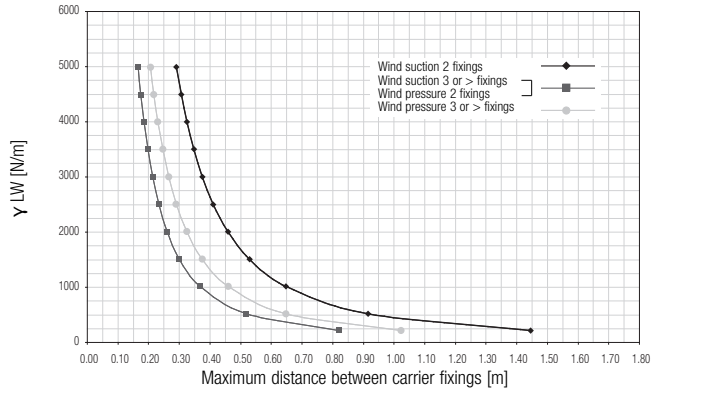

# Maximum Spans

## 75C, 150C, 225C

**- Panel span (c)**
The panel spans, in relation to the wind load (pressure or suction), can be calculated from the graph adjacent.
At 1.000 N/m$^2$ the panel span should be 1.200 mm (75C-panel on 3 or more carriers).

**- Carrier span (b)**
Before establishing the fixing distance of the carriers, the load per lineal meter carrier is to be determined by applying one of the following formulas:

| Panels installed on: | Calculation of 'load per lineal meter carrier' |
|---|---|
| 2 carriers | 0.5 q x panel span (C) in m |
| 3 carriers | 1.25 q x panel span (C) in m |
| 4 or more | 1.15 q x panel span (C) in m |

*q = windload in N/m$^2$ (uniformly distributed loads)*

The carrier span (fixing distance) (B) can be read from the graph besides in the same way as the panel span.

*Note: For corners, roof edges, special designs etc. wind pressure/suction shall be determined with due consideration to the relevant local country's Standard Codes of Building Practice.*

**Panel spans 75C**

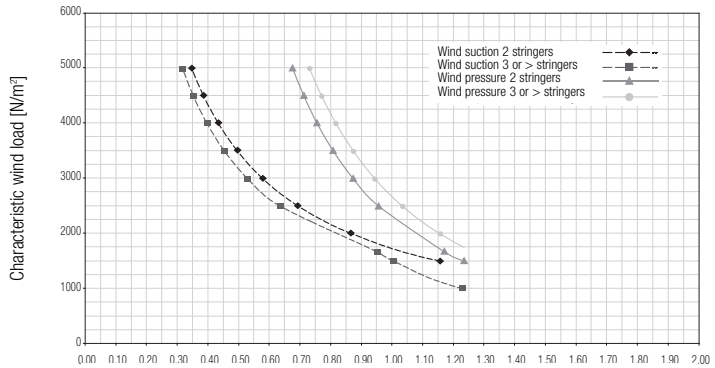


**Panel spans 150C**

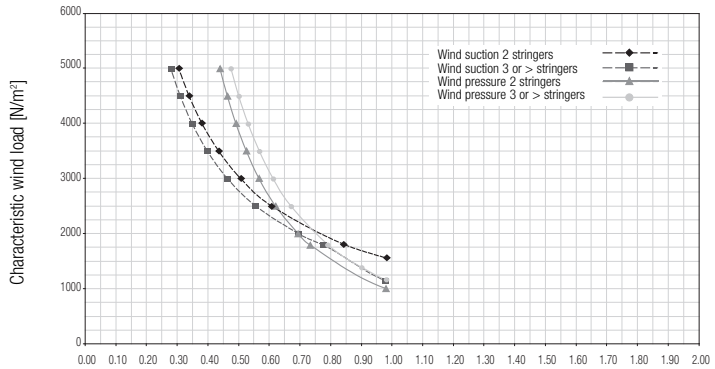


**Panel spans 225C**

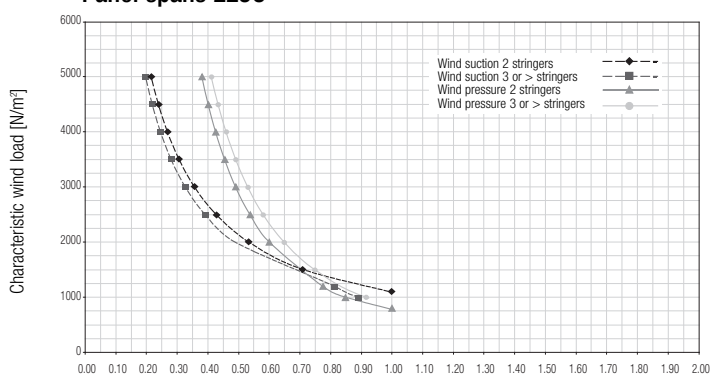


**75C-225C Carrier spans closed panels**

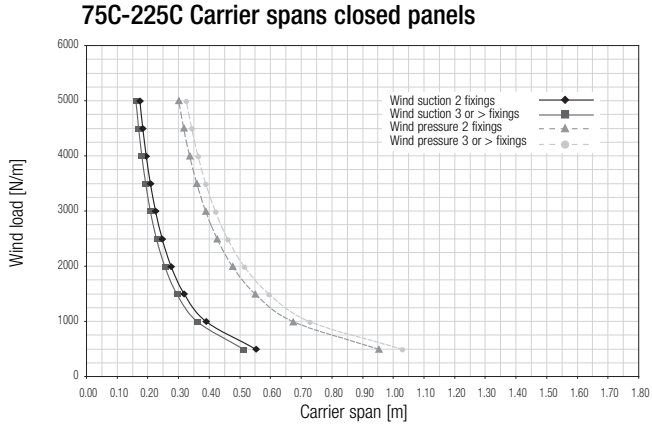

# Maximum Spans

## 300A, 300C, 300L

**- Panel span (c)**
The panel spans, in relation to the wind load (pressure or suction), can be calculated from the graph adjacent.
At 1.500 N/m² the panel span should be 780 mm (300C panel on 3 or more carriers).

**- Carrier span (b)**
Before establishing the fixing distance of the carriers, the load per lineal meter carrier is to be determined by applying one of the following formulas:

| Panels installed on: | Calculation of 'load per lineal meter carrier' |
|---|---|
| 2 carriers | 0.5 q x panel span (C) in m |
| 3 carriers | 1.25 q x panel span (C) in m |
| 4 or more | 1.15 q x panel span (C) in m |

*q = windload in N/m² (uniformly distributed loads)*

The carrier span (fixing distance) (B) can be read from the graph besides in the same way as the panel span.

*Note: For corners, roof edges, special designs etc. wind pressure/suction shall be determined with due consideration to the relevant local country's Standard Codes of Building Practice.*

**Panel spans 300A**

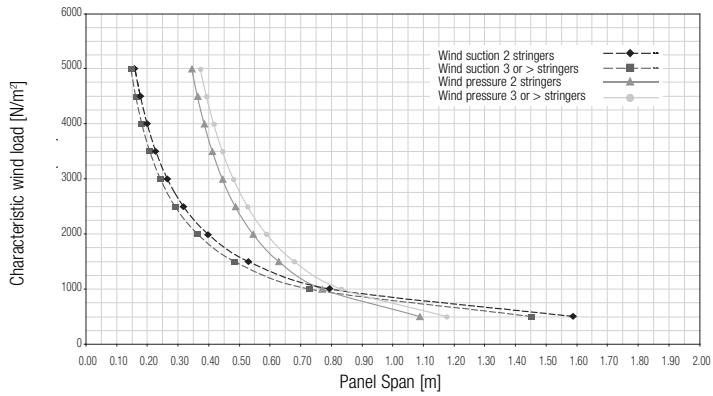


**Panel spans 300C/300L**

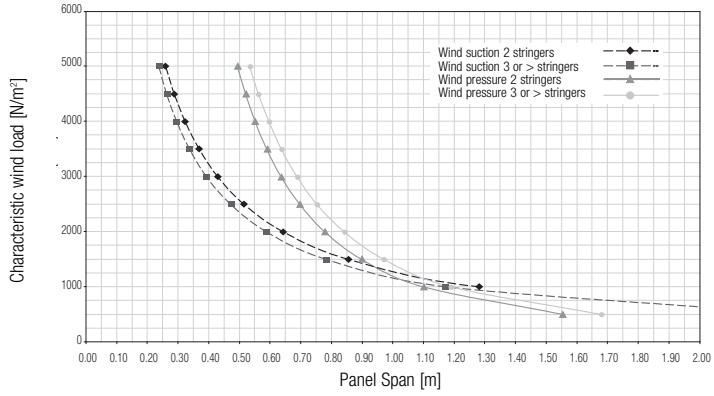


**300ACL Carrier spans wide panel**

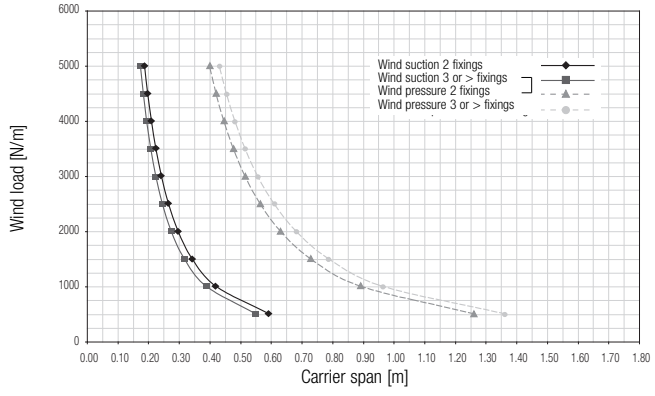

# Maximum Spans

## 150F

**- Panel span (c)**
The panel spans, in relation to the wind load (pressure or suction), can be calculated from the graph adjacent.
At 1.500 N/m² the panel span should be 650 mm (on 3 or more carriers, no clip).

**- Carrier span (b)**
Before establishing the fixing distance of the carriers, the load per lineal meter carrier is to be determined by applying one of the following formulas:

| Panels installed on: | Calculation of 'load per lineal meter carrier' |
|---|---|
| 2 carriers | 0.5 q x panel span (C) in m |
| 3 carriers | 1.25 q x panel span (C) in m |
| 4 or more | 1.15 q x panel span (C) in m |

*q = windload in N/m² (uniformly distributed loads)*

The carrier span (fixing distance) (B) can be read from the graph besides in the same way as the panel span.

*Note: For corners, roof edges, special designs etc. wind pressure/suction shall be determined with due consideration to the relevant local country's Standard Codes of Building Practice.*

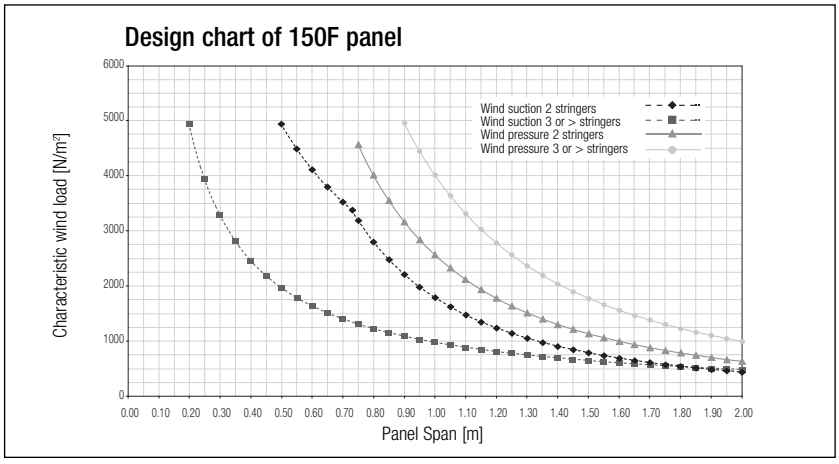


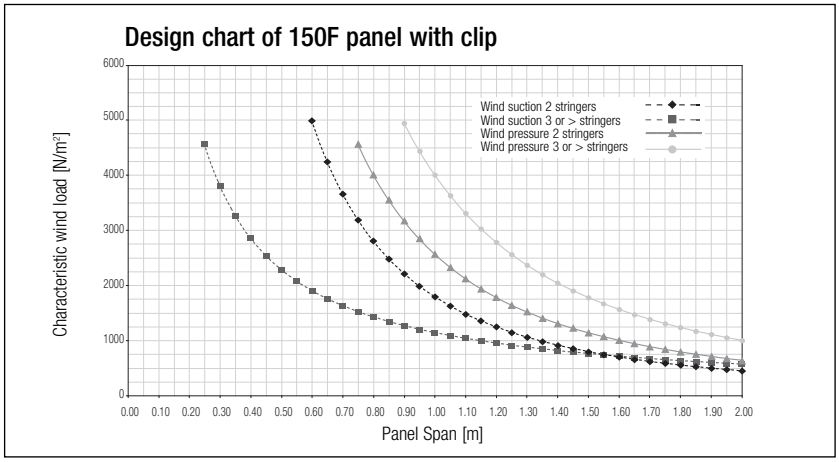


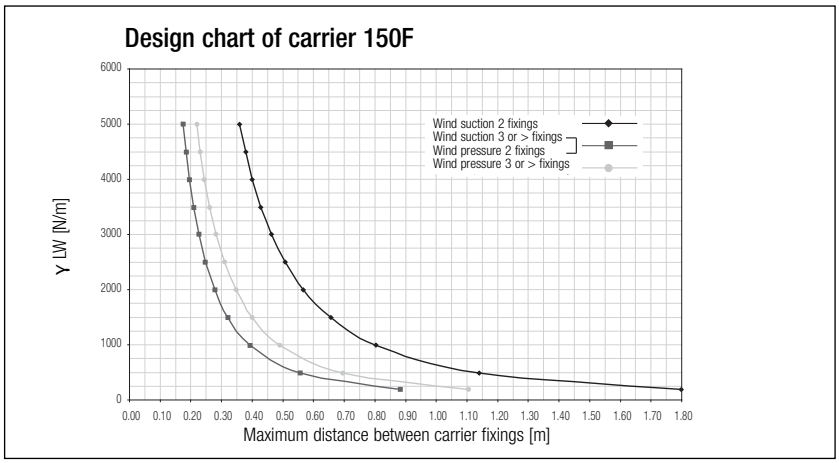

# Maximum Spans

## 200F

**- Panel span (c)**
The panel spans, in relation to the wind load (pressure or suction), can be calculated from the graph adjacent.
At 1.500 N/m² the panel span should be 530 mm (on 3 or more carriers, no clip).

**- Carrier span (b)**
Before establishing the fixing distance of the carriers, the load per lineal meter carrier is to be determined by applying one of the following formulas:

| Panels installed on: | Calculation of 'load per lineal meter carrier' |
|---|---|
| 2 carriers | 0.5 q x panel span (C) in m |
| 3 carriers | 1.25 q x panel span (C) in m |
| 4 or more | 1.15 q x panel span (C) in m |

*q = windload in N/m² (uniformly distributed loads)*

The carrier span (fixing distance) (B) can be read from the graph besides in the same way as the panel span.

*Note: For corners, roof edges, special designs etc. wind pressure/suction shall be determined with due consideration to the relevant local country's Standard Codes of Building Practice.*

**Design chart of 200F panel**

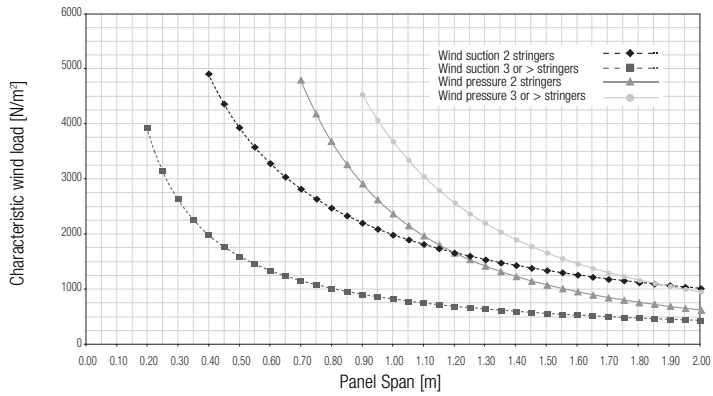


**Design chart of 200F panel with clip**

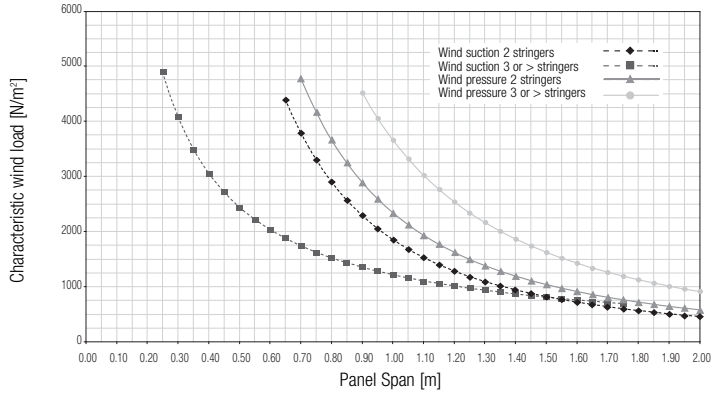


**Design chart of carrier 200F**

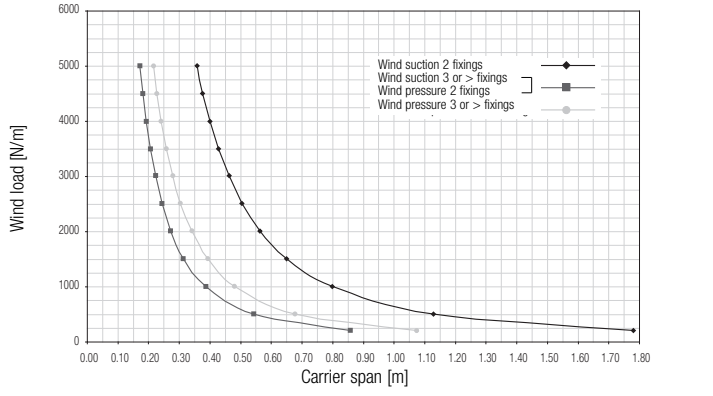

# Maximum Spans

## 70U, 185U

**- Panel span (c)**
The panel spans, in relation to the wind load (pressure or suction), can be calculated from the graph adjacent.
At 1.000 N/m² the panel span should be 1.500 mm (70U panel on 3 or more carriers).

**- Carrier span (b)**
Before establishing the fixing distance of the carriers, the load per lineal meter carrier is to be determined by applying one of the following formulas:

| Panels installed on: | Calculation of 'load per lineal meter carrier' |
|---|---|
| 2 carriers | 0.5 q x panel span (C) in m |
| 3 carriers | 1.25 q x panel span (C) in m |
| 4 or more | 1.15 q x panel span (C) in m |

*q = windload in N/m² (uniformly distributed loads)*

The carrier span (fixing distance) (B) can be read from the graph besides in the same way as the panel span.

*Note: For corners, roof edges, special designs etc. wind pressure/suction shall be determined with due consideration to the relevant local country's Standard Codes of Building Practice.*

**Design chart of 70U panel with locking clip**

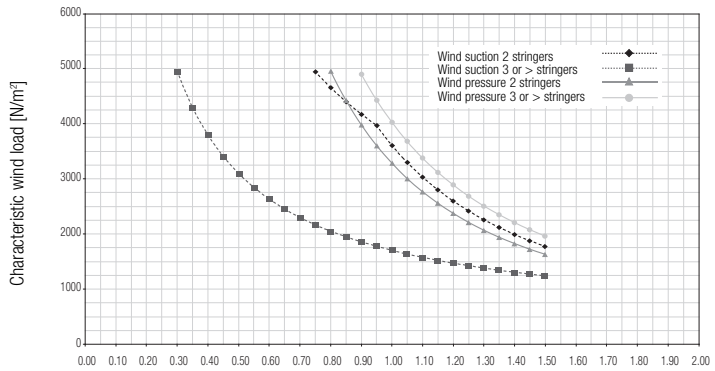


**Design chart for 185U panel**

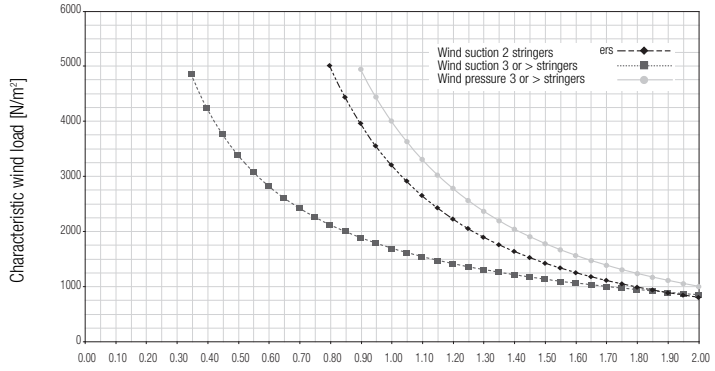


**Design chart of carrier 70U**

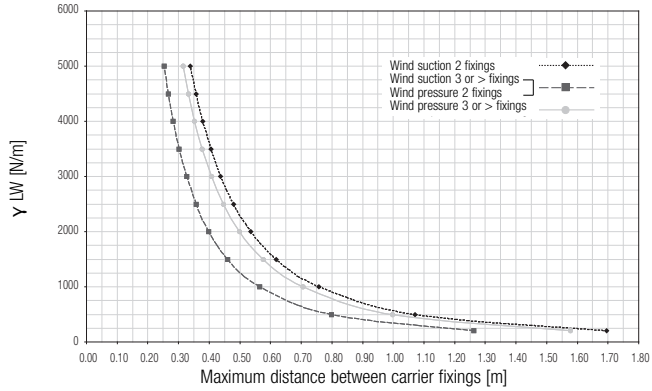


**Design chart of carrier 185U**

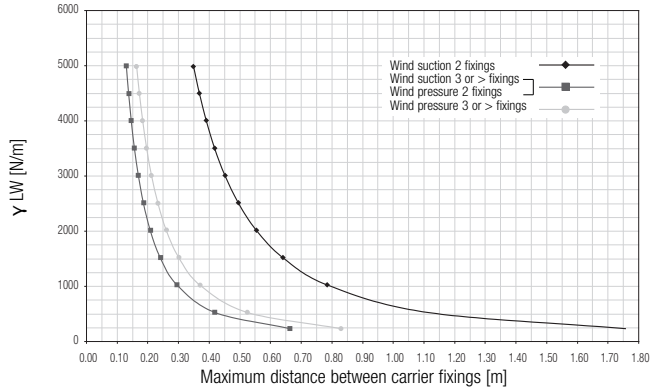

# Maximum Spans

## V100

**- Panel span (c)**
The panel spans, in relation to the wind load (pressure or suction), can be calculated from the graph adjacent.
At 500 N/m² the panel span should be 900 mm (on 3 or more carriers).

**- Carrier span (b)**
Before establishing the fixing distance of the carriers, the load per lineal meter carrier is to be determined by applying one of the following formulas:

| Panels installed on: | Calculation of 'load per lineal meter carrier' |
|---|---|
| 2 carriers | 0.5 q x panel span (C) in m |
| 3 carriers | 1.25 q x panel span (C) in m |
| 4 or more | 1.15 q x panel span (C) in m |

*q = windload in N/m² (uniformly distributed loads)*

The carrier span (fixing distance) (B) can be read from the graph besides in the same way as the panel span.

*Note: For corners, roof edges, special designs etc. wind pressure/suction shall be determined with due consideration to the relevant local country's Standard Codes of Building Practice.*

**Design chart of V100 panel**

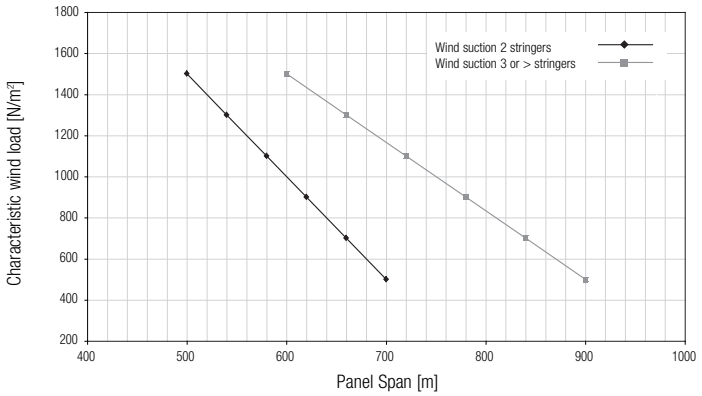


**Design chart of carrier V100**

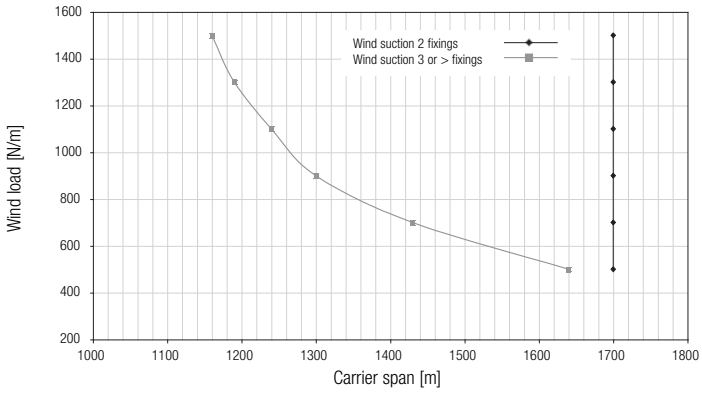

# Material specifications

### - FIRE BEHAVIOUR

Luxalon® Metal Suspended Ceilings are classified incombustible and will therefore not contribute to possible fires. When ceilings however need to protect the structural integrity of the building, Luxalon® Ceilings offer a range of practical and tested solutions with regards to fire resistance and fire stability. Further information is available on request.

### - ENVIRONMENT

We are dedicated to manufacture a sustainable product. Our paint and aluminium melting processes are considered to be one of the industry standards in terms of clean production processes. All aluminium products are 100% recyclable at the end of their lifecycle.

Unprecedented Protection
LUXACOTE®
for exterior application

### - EXTERIOR USE

Our proprietary coil-coating process ensures ceiling panels get a superb finish. Independent tests have proven the excellent performance characteristics of Luxacote®. The topcoat contains a solid UV filter that guarantees perfect colourfastness and gloss stability.
The topcoat also offers better resistance against scratches with a structure that resists and masks any minor damage that may occur during installation, resulting in a high abrasion resistance.
The alloy and pre-treatment also offers optimal resistance to corrosion.

### - Colour range

The standard Hunter Douglas exterior colour range for Luxalon® Linear Ceiling systems includes several different colours and finishes. See colour chart. Any other (RAL or NCS) colour is available on request.

### - Tolerances

As a member of the Technical Association of Industrial Metal Ceiling Manufacturers (TAIM), Hunter Douglas complies with tolerance criteria as specified in chapter 4 of the TAIM Quality standards for metal.

### CURVED CEILING POSSIBILITIES

Flexible carriers: Multipanel, 84B, 84R, 70U
Curved panels: 84R
Curved subconstruction: 150F, 200F

### EXTERIOR CEILINGS

Exterior building applications cope with severe conditions like wind, rain, snow, dirt, vandalism and UV light. Our special aluminium alloy, high-quality surface treatments featuring Luxacote® and our windproof systems ensure durability in applications like canopies, shopping centres and railway/underground stations.

- Box-shape, bevel-edge and round-edge panels
- Special alloy of corrosion-resistant aluminium
- Luxacote® coating system resistant to UV and scratches and is rain-, dirt- and snow-proof
- Certified for wind loads

# Impressions

*Project : Dyrup*
*Location : Copenhagen, Denmark*
*Product : Luxalon® Ceiling: type Linear Multipanel Exterior*
*Quantity : 6.000 m²*
*Architect : Bjarne Frost Arkitekter, Thomas Seemann*

---

*Project : PA Consult C&H*
*Location : Copenhagen, Denmark*
*Product : Luxalon® Ceiling, type Wide Panel Exterior*
*Quantity : 1.200 m²*
*Architect : Perlt&Black a/s C&H*

## HUNTER DOUGLAS ARCHITECTURAL PRODUCTS

Over 40 years, we've been fortunate enough to help turn countless innovative sketches into innovative buildings.

Architects, designers, investors and contractors from around the world have taken advantage of Hunter Douglas' unmatched product development, service and support. Chances are, you've seen more of Hunter Douglas than you think.

With major operation centres in Europe, North America, Latin America, Asia and Australia, we've contributed to thousands of high-profile projects, from retail and commercial facilities to major transit centres and government buildings.

Not only are the world's architects and designers our partners, they're our inspiration. They continue to raise the bar for excellence. We create products that help bring their visions to life: Window Coverings, Ceilings, Sun Control systems and Façades.

PEFC

Promoting sustainable
forest management
www.pefc.org

® Registered trademark - a HunterDouglas® product Pats. & Pats. Pend. - Technical data subject to change without notice.
© Copyright Hunter Douglas 2009. No rights can be derived from copy, text pertaining to illustrations or samples. Subject to changes in materials, parts, compositions, designs, versions, colours etc., even without notice. **MX800C00**

**ARCHITECTURAL SERVICES**

We support our business partners with a wide range of technical consulting and support services for architects, developers and installers. We assist architects and developers with recommendations regarding materials, shapes and dimensions and colours and finishes. We also help creating design proposals, visualisations and mounting drawings. Our services to installers range from providing detailed installation drawings and instructions to training installers and advising on the building site.

**HUNTER DOUGLAS** is a publicly traded company with activities in more than 100 countries with over 150 companies.

The origin of our company goes back to 1919, in Düsseldorf, Germany. Throughout our history, we have introduced innovations that have shaped the industry, from the invention of the continuous aluminium caster, to the creation of the first aluminium venetian blinds, to the development of the latest high-quality building products.

Today we employ more than 20,000 people in our companies with major operation centres in Europe, North America, Latin America, Asia and Australia.

**Innovative Products**
**Make Innovative Projects**

LUXALON®

HunterDouglas

# Learn More

- Contact our Sales office
- www.hunterdouglascontract.com

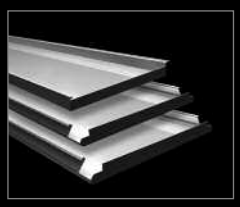

Wide Panel

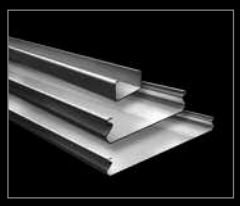

Linear

Screen

Tiles
XL panel

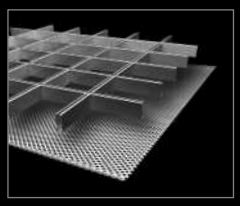

Cell
Stretch metal

Chilled
Curved

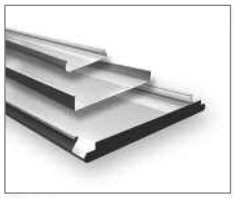

Exterior

Austria
Belgium
Bulgaria
Croatia / Slovenia
Czechia
Denmark
France
Germany
Greece
Hungary
Ireland
Italy
Kazakhstan
the Netherlands
Norway
Poland
Portugal
Romania
Russia
Serbia
Slovakia
Spain
Sweden
Switzerland
Turkey
Ukraine
United Kingdom
Africa
Middle East

Asia
Australia
Latin America
North America

**HUNTER DOUGLAS EUROPE B.V.**
2, Piekstraat
P.O. Box 5072 - 3008 AB Rotterdam
Tel. +31 (0)10 - 4869911
Fax +31 (0)10 - 4847910
www.hunterdouglascontract.com

**HunterDouglas**

WINDOW COVERINGS | CEILINGS | SUN CONTROL | FAÇADES