SENSOR PRODUCTS GUIDE

SENTEC

APPLICATION

Thickness detection of chucking work

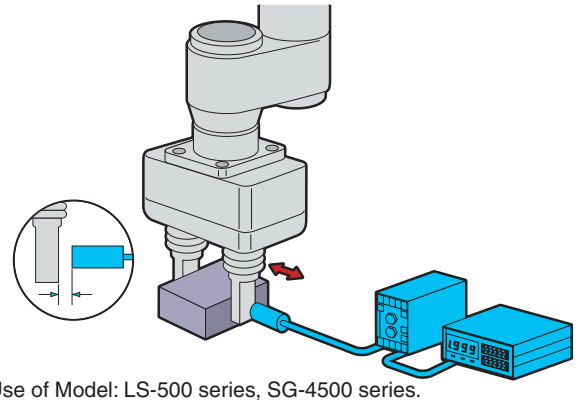

Use of Model: LS-500 series, SG-4500 series.

When the robot hand or air chuck catches the subject, the sensor detects the finger position and converts it into the thickness of the work comparing with tolerance of fair quality.

Measuring the flexion of band steel

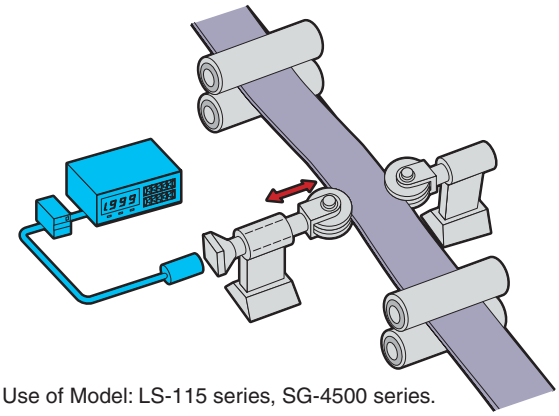

Use of Model: LS-115 series, SG-4500 series.

After metal rolling and out from the slitter, the sensor measures the flexion of band steel by movement of roller at the side of band steel. And quality of band steel is judged.

Detecting absence of wire-solder

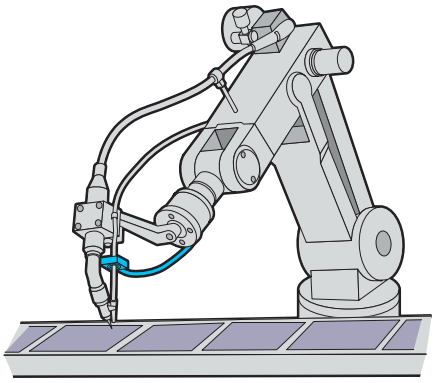

Use of Model: MS-110/120 series.

Detecting absence of wire-solder for solder robot.

Positioning control of the work

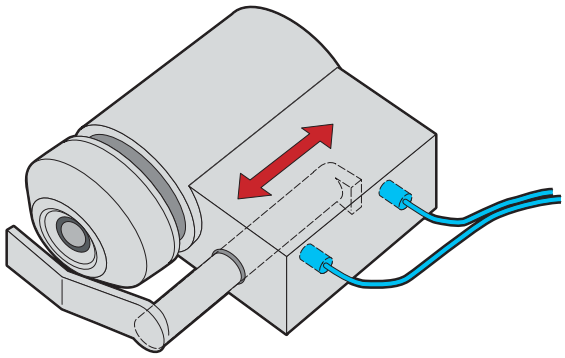

Use of Model: FMS-550 series.

Checking the firm insertion of the metal work in the non-metallic cover.

Checking through of screw

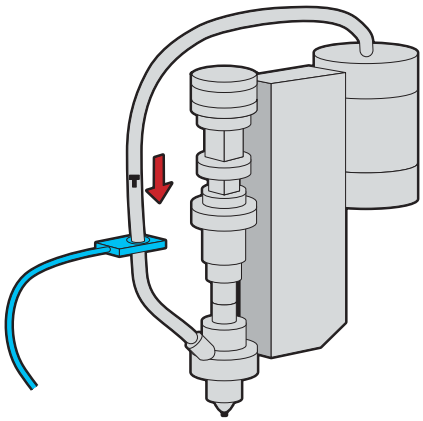

Use of Model: FMS-112 series.

The sensor detects the screw pass through the plastic pipe.

Detecting vibration of the bearing unit

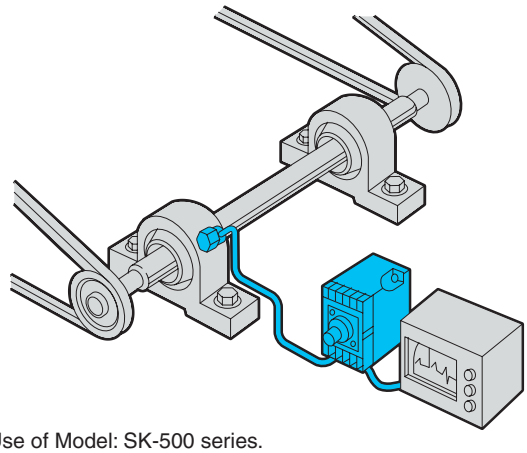

Use of Model: SK-500 series.

Used in a system recording the secular change of bearing.

High Accuracy Displacement Sensor (Standard)

LS-500

SENTEC

Application is expanded with Hold Function.

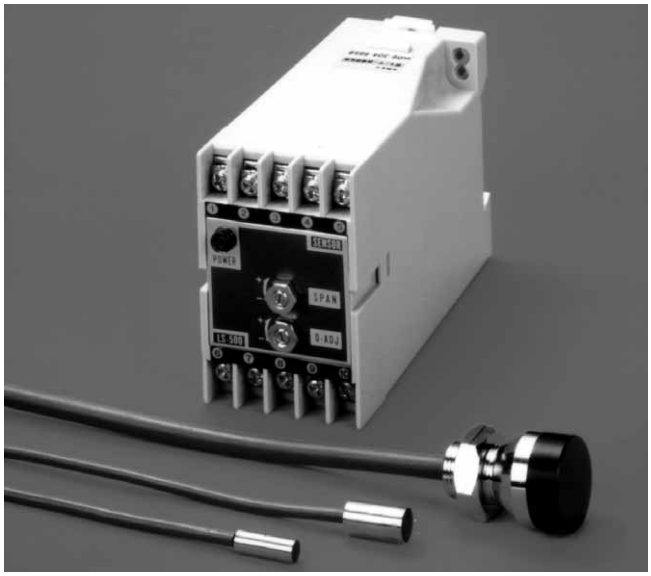

Features

- Strong against temperature influence keeping high accuracy.
- Measure 0.3 um displacement (LS-500SP series).
- Response follows at 10kHz (LS-500SS series).
- Built-in Hold Function.
- High performance of environmental duration.
- The controller housing is subject to DIN standard.

Applications

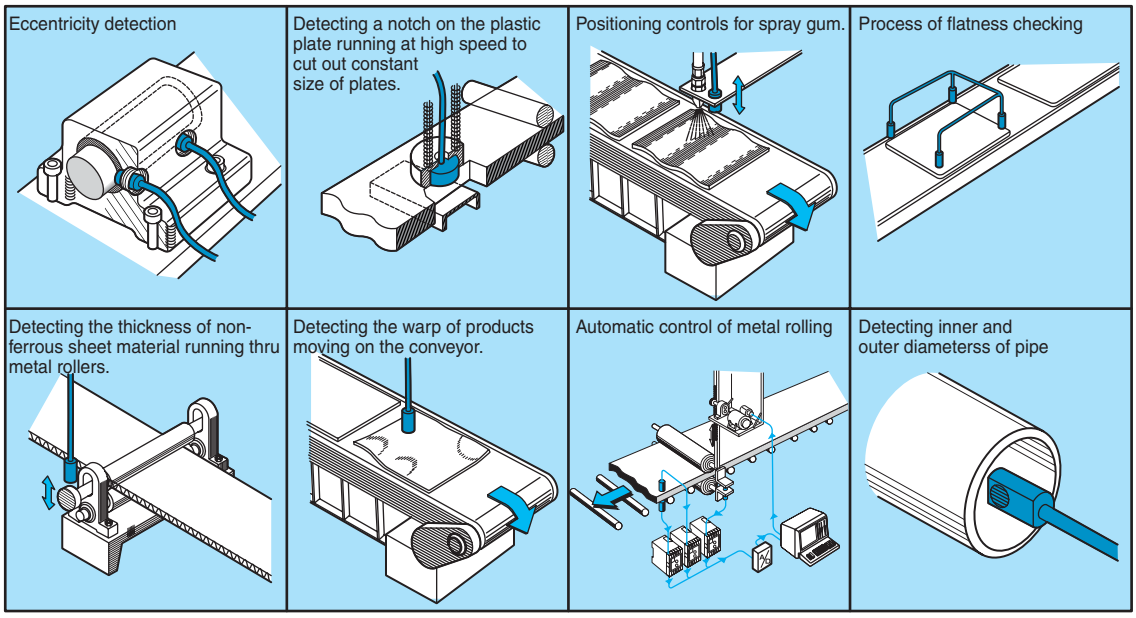

LS-500

Controller Specifications

CONTROLLER								
	AC-TYPE	LS-500-04*2	LS-500-08	LS-500-1	*12・*13 LS-500-2A・2B	*14・*15 LS-500-4A・4B	LS-500-5	LS-500-10
	DC-TYPE*1	LS-500D-04*2	LS-500D-08	LS-500D-1	*12・*13 LS-500D-2A・2B	*14・*15 LS-500D-4A・4B	LS-500D-5	LS-500D-10
ITEM \ SENSOR *3		HA-20S	HA-30S HA-30YS	HA-50S HA-50YS	HA-80S*12 HA-80YS*12 HA-101S*13	HA-141S*14 HA-225S*15	HA-162S	HA-222S
MEASURING RANGE*3		0 ~ 0.4mm	0 ~ 0.8mm	0 ~ 1mm	0 ~ 2mm	0 ~ 3.5mm	0 ~ 5mm	0 ~ 10mm
OUTPUT VOLTAGE		0 ~ 0.4V	0 ~ 0.8V	0 ~ 1V	0 ~ 2V	0 ~ 3.5V	0 ~ 5V	0 ~ 10V
LINEARITY		±2% of F.S	±1% of F.S*5					
RESOLUTION		0.03% of F.S(0.3μm ,minimum)*6						
RESPONSE		DC ~ 10kHz(−3dB)*7						
OUTPUT IMPEDANCE		52Ω						
STABILITY		*8	CONTROLLER : 0.01% of F.S/°C SENSOR HEAD : 0.02% of F.S/°C *9					
OPERATING TEMPERATURE		CONTROLLER : −10 ~ 60°C SENSOR HEAD : −20 ~ 70°C 85%RH or less ,no condensation						
POWER	AC-TYPE RATE	AC100/200V ±15% 50/60Hz						
	AC-TYPE CONSUMPTION	3VA or less						
	DC-TYPE RATE	DC12−24V ±15% ripple 10% or less						
	DC-TYPE CONSUMPTION	150mA or less						
FUNCTIONS*10 (OPTIONAL)	S S	●	●	●	–	–	–	–
	S P	●	●	●	●	●	●	●
	F	●	●	●	●	●	●	●*11
	P	●	●	●	●	●	●	●*11
	B	●	●	●	●	●	●	●*11

*1:CE Marking Correspondence article. EMC directive (89/336/EEC):EN61000-6-4(EMI), EN61000-6-2(EMS). The test is not applicate to D.C power input ports intended to be permanently connected to cables less than in 10m length. Please make into a length of less than 10m the code which connects a controller with a direct-current power supply.
*2:An adjustment subject serves as only iron.
*3:There is no compatibility between Sensors-Head. Change of the length of the code of a sensor changes the characteristic.(The standard length is 3m.) When length is changed, please ask to the marketing department of our company.
*4:It is the case where an adjustment subject is iron.
*5:Set to ±2% of F.S, when an abjustment subject is not iron.
*6:LPF(Low Pass Filter)the static minimum at the time of use - it is resolution Please specify SP type of an option. A standard machine is of F.S 0.1% (1μm of resolution [Minimum]).
*7:Please specify SS type of an option.
*8:CONTROLLER : 0.02% of F.S/°C,SENSOR-HEAD:0.04% of F.S/°C
*9:It is the case where the length of coaxial cable the same axle of a sensor head is standard specification (3m), and an adjustment subject is iron.
*10:One option corresponding to each type - mark can be chosen.

About an option function

SS	(High Response)	: Frequency Response is DC ~ 10kHz (-3dB).*9
SP	(High Resolution)	: Resolution is 0.03% of F.S(minimum 0.3μm).Frequency Response is DC ~ 1.3kHz (-3dB)
P	(Peak Hold output)	: The maximum of an output is outputted from an option terminal by closing a synchronous terminal.
B	(Bottom Hold output)	: The minimum of an output is outputted from an option terminal by closing a synchronous terminal.
F	(Amplituide Hold output)	: The difference of the maximum and the minimum value outputs from an option terminal by closing a synchronous terminal.

*11:Absolute Output and Hold Output are 1/10 and 0 ~ 1V
*12・*13:HA80S and 80YS for LS-500-2A, LS500D-2A and HA-101S for LS-500-2B and LS-500D-2B
*14・*15:HA-141S for LS-500-4A and LS500D-4A, HA-225S for LS-500-4B and LS-500D-4B.

• LS-500(AC-type)

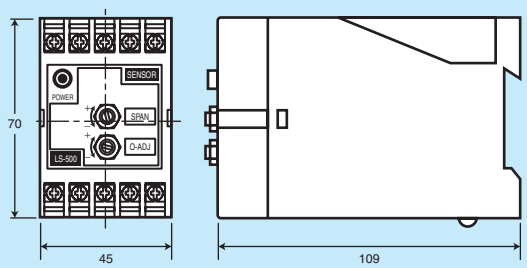

• LS-500D(DC-type)

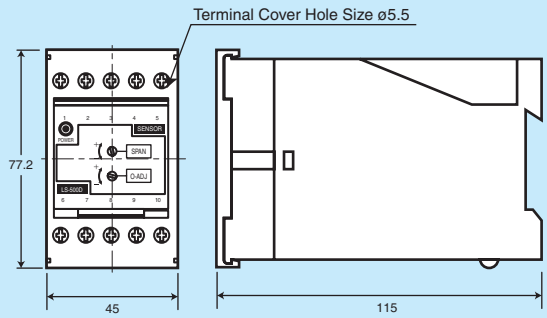

LS-500

Sensor Head Dimensions

• SENSOR HEAD(:Consult for horizontal type.)

HA-20S ~ 80S

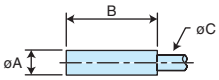

TYPE \ MARK	A	B	C
HA-20S	2.8	15	1.9
HA-30S	3.6	15	2.6
HA-50S	5.4	15	3.2
HA-80S	8	15	3.2

HA-101S,141S

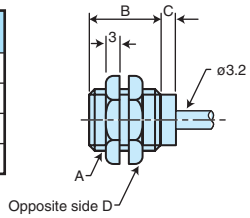

TYPE \ MARK	A	B	C	D
HA-101S	M10,P=1.0	12	3	14
HA-141S	M14,P=1.0	15	5	19

HA-162S

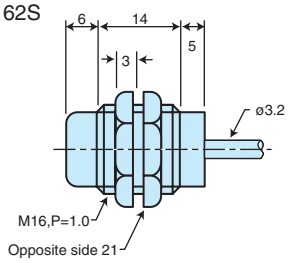

HA-222S

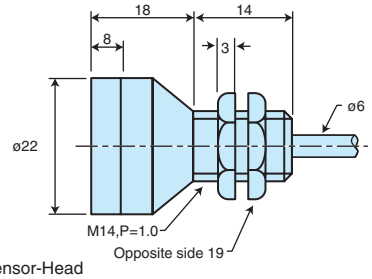

HA-225S

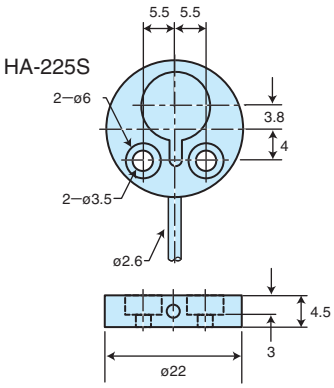

3m of standard coaxial cord is attached to each Sensor-Head

Consult for 35mm Max. measuring range of large size sensor and etc.

Wiring Connections

• LS-500-□□

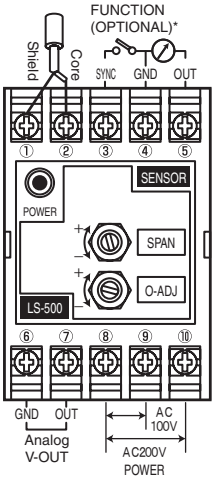

• LS-500D-□□

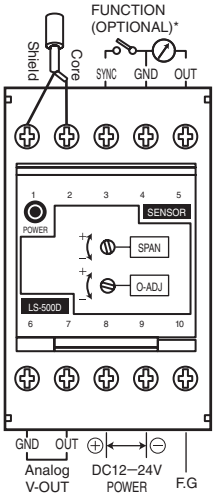

*FUNCCTION(OPTIONAL)

PEAK-HOLD(P)
BOTTOM-HOLD(B)
AMPLITUDE(F)

Only any one is chosen.

Standard is free terminal.

Mounting Dimensions

• Mounting Dimensions(mm)

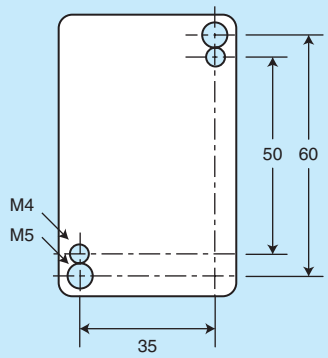

DIN rail attachment is possible.
(DIN standard : based on 46277)

Front Panel

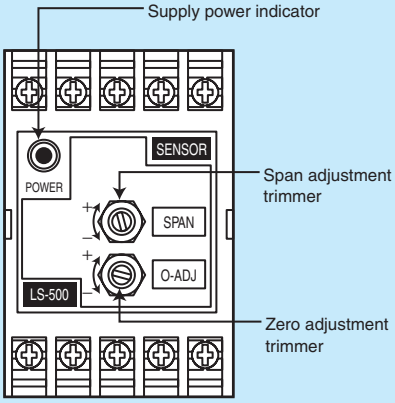

Offset Span Adjustment Range

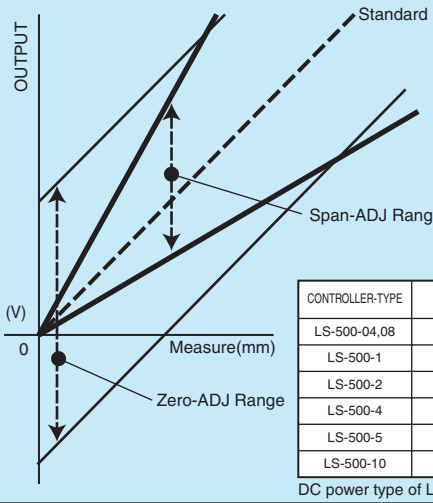

CONTROLLER-TYPE	Zero-ADJ Range(V)	Span-ADJ
LS-500-04,08	-0.4 ~ +0.4	0.7 ~ 1.3imes
LS-500-1	-0.5 ~ +0.5	
LS-500-2	-1.0 ~ +1.0	
LS-500-4	-2.0 ~ +2.0	
LS-500-5	-3.0 ~ +2.0	
LS-500-10	-5.0 ~ +1.0	

DC power type of LS-500D is same as above.

LS-500

■FUNCTION

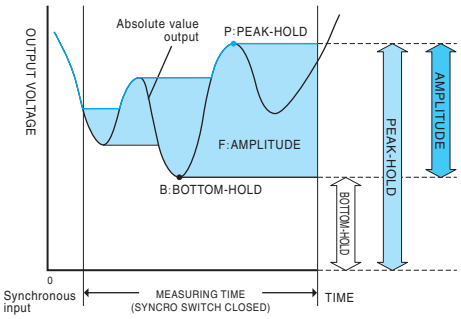

1. PEAK-HOLD(P)
2. BOTTOM-HOLD(B)
3. AMPLITUDE(F)

*Data etc. has a case where it differs from catalog spec according to an operating condition etc. with a reference value.

Output Characteristics

(1)For the area of a subject

A specification value will be satisfied if it is the thing which has a sensor head and a diameter more than equivalent when a subject is used as a disk.

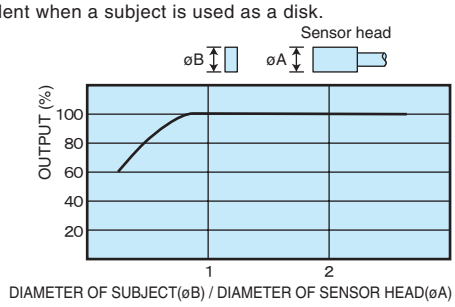

(2)In case a subject is a pillar

A specification value will be satisfied if the diameter of the pillar of a subject is by the thing which has 5 or more times of the diameter of a sensor head.

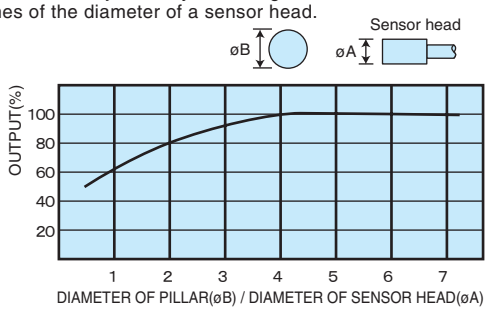

(3)The charactoeristic over metal other than iron.

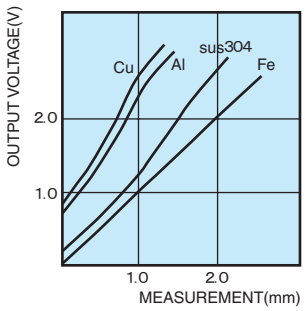

(4)Response For Frequency(LS-500-SS)

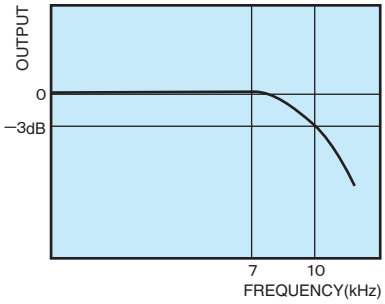

Caution In Use

• SENSOR HEAD MOUNTING

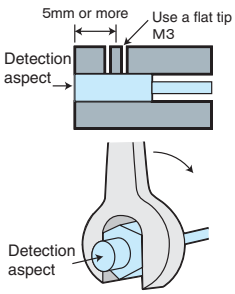

TYPE	MAX. TORQUE
HA-20S	0.1Nm or less
HA-30S	0.2Nm or less
HA-50S	0.5Nm or less
HA-80S	0.8Nm or less
HA-101S	4Nm or less
HA-141S	15Nm or less
HA-162S	30Nm or less
HA-222S	15Nm or less

*From the Model of HA-20S to HA-141S are suitable to implant inside of metal. Re-adjustment may be required for measurement. Consult to Sales Department.

• MUTUAL INTERFERENCE

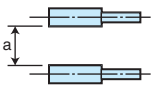

Refer to the table list for minimum distance between the plural sensor heads set at opposing or parallel position. (with selector B)

mm

TYPE \ MARK	a	a′
HA-20S	6	2
HA-30S	7	3
HA-50S	12	5
HA-80S	20	8
HA-101S	20	8
HA-141S	30	12
HA-225S	20	10
HA-162S	60	30
HA-222S	60	30

• VHF COAXIAL CABLE & CONNECTORS MATERIALS

Readjustment is required for extending or cutting co-axial cable. (Additional cost)

TYPE	COAXIAL CABLE	COAXIAL CONNECTOR
HA-30S・HA-225S	RG-174U	BNC P-1.5,J-1.5
HA-50S ~ HA-162S	1.5D-QEV	
HA-222S	3D-QEV	BNC P-3,J-3

• EFFECT OF SURROUNDING FERROUS MATERIALS

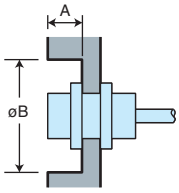

TYPE \ MARK	A	øB
HA-162S	9	30
HA-222S	18	42

High Accuracy Displacement Sensor (DC power)

LS-115

SENTEC

Mini power relay size is easy to use.

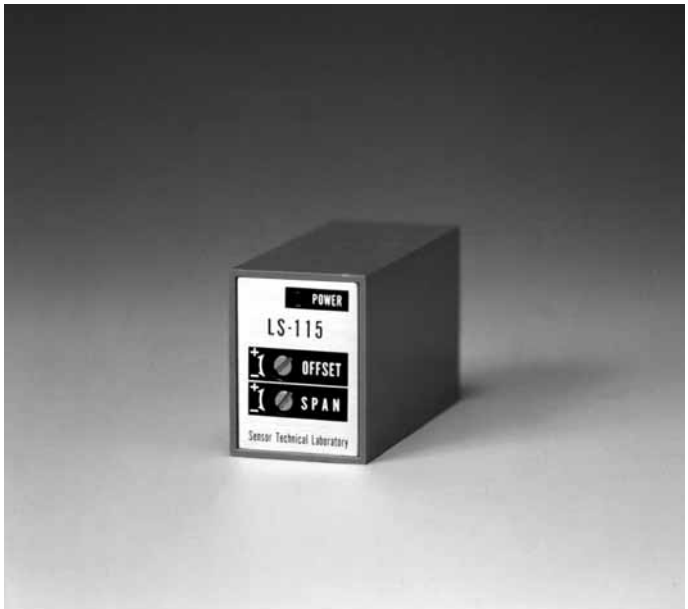

Feature

- High accuracy measurement.
- Small shape.
- Low drift.
- DC supply power and ± voltage output.
- Available with interchangeability of sensor head.

Application

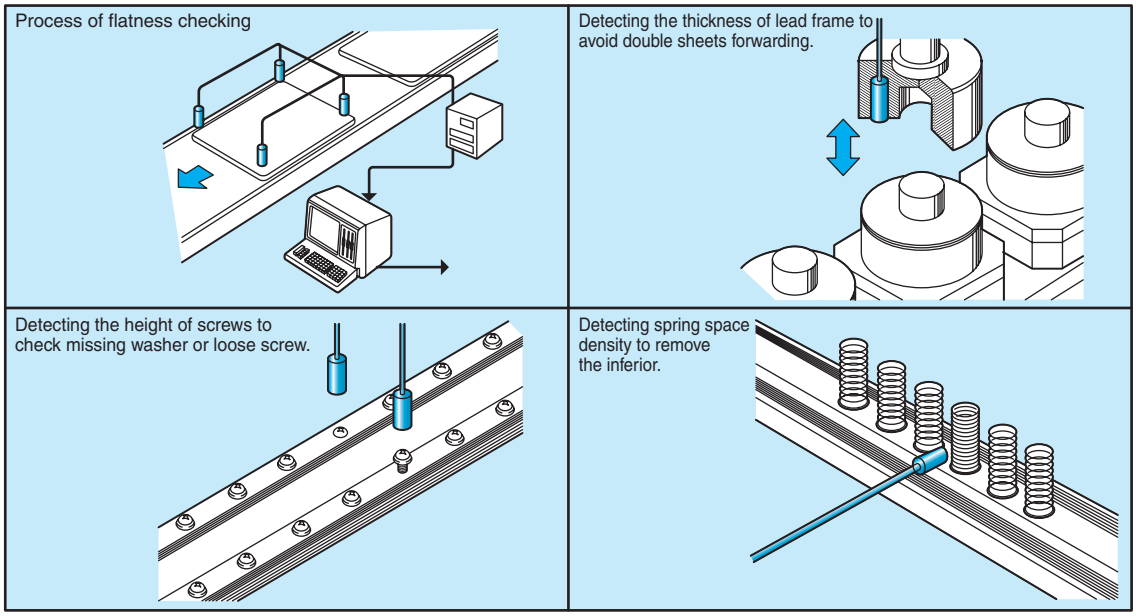

LS-115

Specification

CONTROLLER / SENSOR / ITEM	LS-115-1	LS-115-2	LS-115-3A·3B*3·*4	LS-115-4A·4B*5·*6
	HA-30S	HA-50S	HA-80S*3 HA-101S*4	HA-141S*5 HA-225S*6
MEASURING RANGE *1	0 ~ 0.8mm	0 ~ 1mm	0 ~ 2mm	0 ~ 4mm
LINEARITY RANGE *2	0 ~ 0.4mm	0 ~ 0.6mm	0 ~ 1.4mm	0.5 ~ 2.0mm
OUTPUT VOLTAGE	0 ~ 0.8V	0 ~ 1V	0 ~ 2V	0 ~ 4V
LINEARITY	±2% of F.S			
RESOLUTION	0.1% of F.S(1μm, minimum)			
RESPONSE	DC ~ 5KHz(−3dB)			
OUTPUT IMPEDANCE	52Ω			
STABILITY	CONTROLLER : 0.02% of F.S/°C SENSOR-HEAD: 0.03% of F.S/°C			
OPERATING TEMPERATURE	CONTROLLER : 0 ~ 60°C SENSOR-HEAD: −10 ~ 70°C			
POWER SUPPLY	DC12−30V 50mA or less(ripple 20% or less)			

*1 : Measuring range is assured for repeatable accuracy, but linearity is slightly decreased.
*2 :Measuring range is assured for 2% accuracy of linearity.
*3·*4 : HA-80S for LS-115-3A, HA-101S for LS-115-3B
*5·*6 : HA-141S for LS-115-4A, HA-225S for LS-115-4B

Controller Dimensions

• CONTROLLER DIMENSIONS(mm)

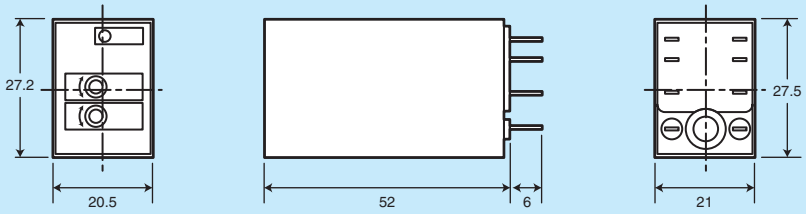

Sensor Head Dimensions

• SENSOR HEAD DIMENSIONS (mm)

HA-30S

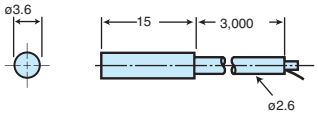

HA-50S

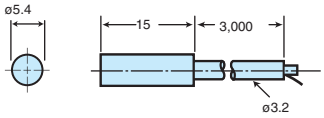

HA-80S

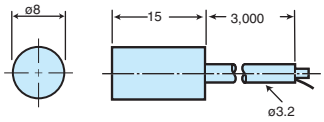

HA-101S

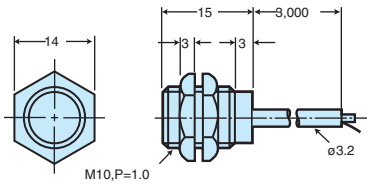

HA-141S

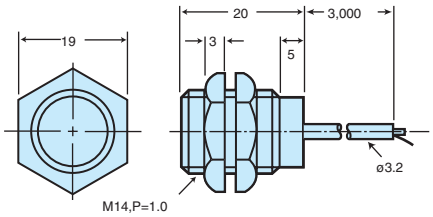

HA-225S

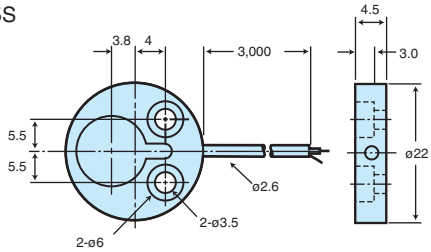

3m of standard coaxial cord is attached to each Sensor-Head

LS-115

Wiring Connections

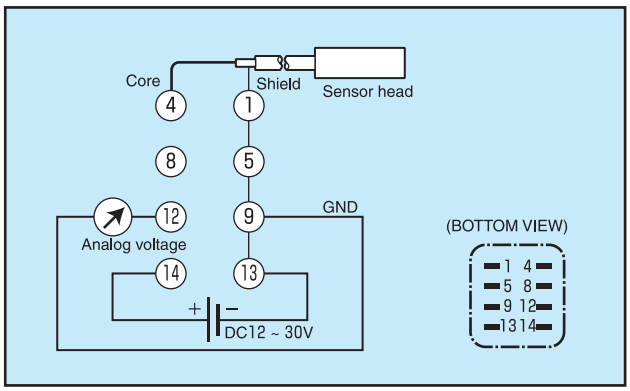

Front Panel

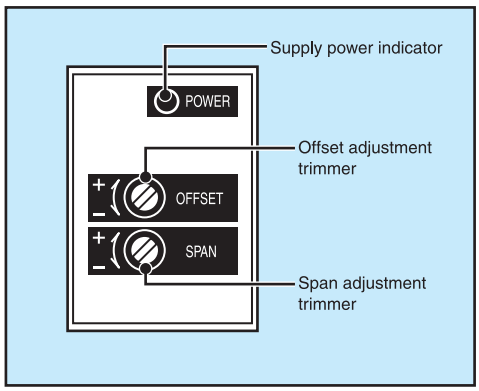

Adjustment Manner

(2)Offset adjustment

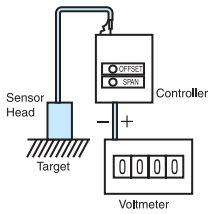

Adjust OFFSET with input touching the sensor head to the target for reading zero on the voltage meter connecting to the analog voltage output terminals.

(2)Span adjustment

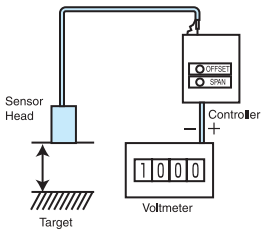

Adjust SPAN with input at the half of the full detectable displacement for reading the required figures on the voltage meter connecting to the analog voltage output terminals.

(Example1mm=1,000mV
HA-80S)

* Do OFF-Set and Span adjustment for a few times.

Caution In Use

• SENSOR HEAD MOUNTING

Fasten the sensor head by torque as list below. Note: Use flat tip screw of M3.

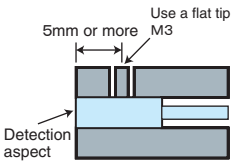

TYPE	MAX. TORQUE
HA-30S	0.2Nm or less
HA-50S	0.5Nm or less
HA-80S	0.8Nm or less
HA-225S	1Nm or less

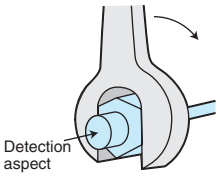

TYPE	MAX. TORQUE
HA-101S	4Nm or less
HA-141S	15Nm or less

• VHF COAXIAL CABLE & CONNECTORS MATERIALS:

Do not wire with power line, solo-wiring is required. High frequency co-axial cable (Impedance 50Ω) is required for extension with 10m Max.

TYPE	COAXIAL CABLE	COAXIAL CONNECTOR
HA-30S HA-225S	RG-174U	BNC-P-1.5,J-1.5
HA-50S ~ HA-141S	1.5D-QEV	

Data

(1)For the area of a subject

A specification value will be satisfied if it is the thing which has a sensor head and a diameter more than equivalent when a subject is used as a disk.

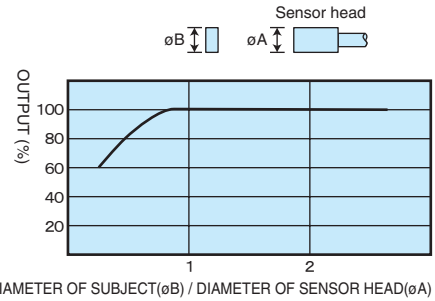

(2)In case a subject is a pillar

A specification value will be satisfied if the diameter of the pillar of a subject is by the thing which has 5 or more times of the diameter of a sensor head.

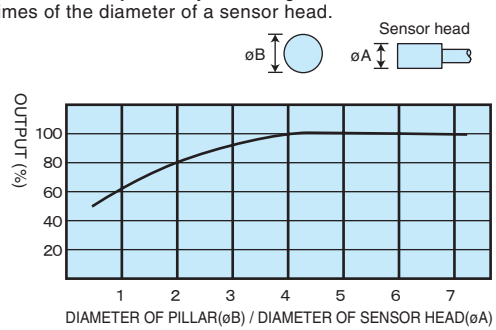

*Data etc. has a case where it differs from catalog spec according to an operating condition etc. with a reference value.

Sub-miniature Proximity Sensor
(DC power)

MS-110,120

SENTEC

Mini power relay type and plug in.

Feature

- Sub-miniature controller.
- Circuit with protection against mutual interference.
- High accuracy.

Application

Detecting grip of robot to control fingers.

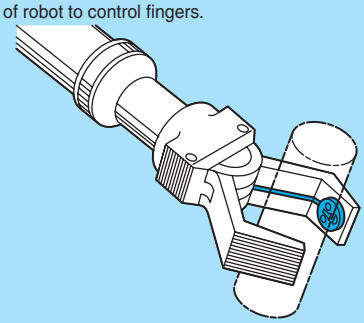

Detection for cutting error of screw thread

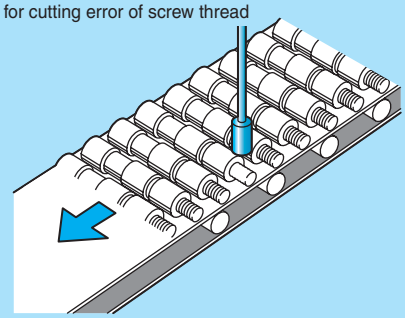

Detecting pull-top on can for alignment.

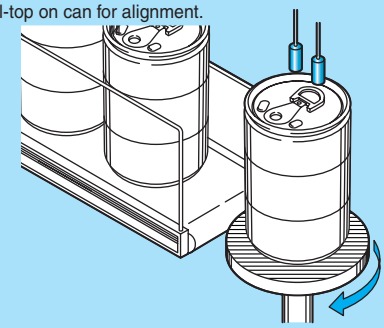

Positioning controls for slider.

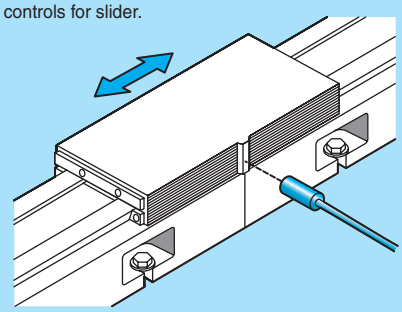

MS-110,120

Controller Specifications

ITEM \ TYPE		MS-110	MS-120
FUNCTION		Single channel(A)	Dual channel(A),(B)
POWER SUPPLY		DC5 ~ 30V、ripple 10% or less	
CURRENT CONSUMPTION		15mA or less	20mA or less
PROTECTIONS		Power protection & Surge killer (Zenner barrier)	
OUTPUT	CIRCUIT	NPN open-collector	
	ACTION	Make at "Detection" & Make at "Non-detection"	Make at "Detection"×2
	CAPACITY	40VDC 100mA, Max.	
RESPONSE		1ms or less	
SENSITIVITY ADJ.		15 turn pot.	
TARGET		Ferrous materials : Fe, Al, Stainless steel, Cu etc.	
MATERIALS USED		Cover : ABS resin Terminal : Phenol resin	
DETECATION		LED(red) turns on at relay make.	
OPERATING TEMPERATURE		-10 ~ 60°C	
OPERATING HUMIDITY		85%RH or less, non-condensing	
SOCKET		Socket (YF08A, RT58S, SM2S-05B, or equivalent) shall be purchased separately.	

*1.Max. measuring distance:Max. distance is measured by standard medium (Fe, SS400 90ø5t) with neglect of accuracy.
*2.Stable measuring range:Measuring range satisfied by accuracy.
*3.Differential distance:Difference between conversion and reconversion function.
*4.Repeatability: Error of measuring distance by repeat function with certain condition.
*5.The data of specification is based on using standard length of sensor head cable (3m). The distance shall be slightly shortened by extension cable.

Sensor Head Specifications

TYPE \ ITEM		TYPE	OUTSIDE DIAMENTER OF FACE (MM)	OPERATING DISTANCE* (MM)	*3DIFFERENTIAL DISTANCE (μM)	*4REPEATED ACCUARCY (μM)	Availability of embedding	WORKING TEMPERATURE (°C)
CYRINDRICAL TYPE	H-20		ø2.8	0.6 / 1.8	20	3	○	-10 ~ 60
	H-30		ø3.6	1.2 / 2.2	50	2	○	
	H-50		ø5.4	1.5 / 2.5	50	2	○	
	H-80		ø8.0	2.5 / 5	40	5	○	
SCREW TYPE	H-101		M10	2.5 / 5	40	5	○	
	H-141		M14	5 / 8	50	5	○	
	H-162		M16	6 / 10	50	6	×	
	H-182		M18	7 / 16	80	10	×	
	H-222		ø22	8 / 18	100	10	×	
	H-302		ø30	12 / 25	120	10	×	
THIN TYPE	H-225		4.5t	5 / 8	50	5	○	

*How to read "Operationg"
Example : In case of H-50

1.5	2.5

*2 Stable operating distance

*1 Maximum operating distance

Remarks : The operating distance contained in the specifications is for standard detection material (Fe 18, it).In case of non-ferrous metals, refer to the coefficient of the following tabel.

SS400	1.0
SUS430	approx. 0.9
SUS304	approx. 0.8
Brass	approx. 0.6
Aluminium	approx. 0.4
Copper	approx. 0.4

MS-110,120

Output

MS-120

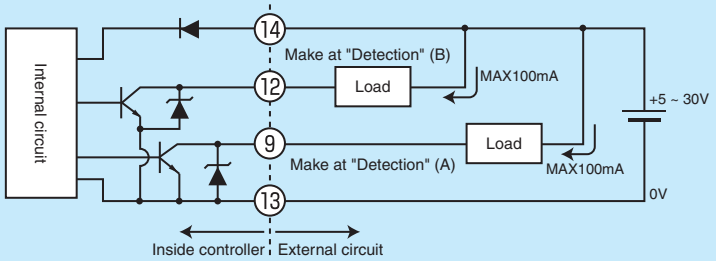

Time Chart

MS-110

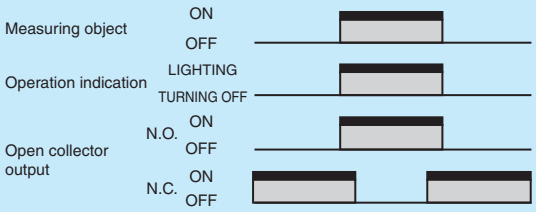

MS-120

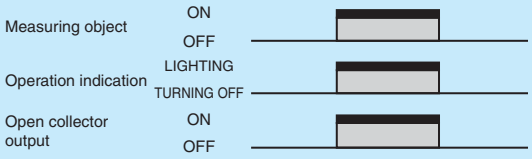

Front Panel

MS-110

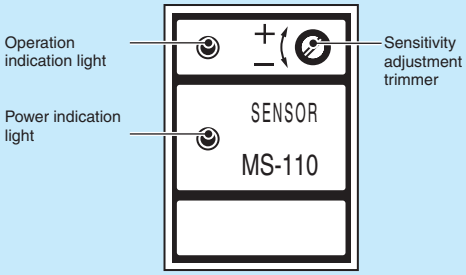

Conformity to socket of mini power relay.

MS-120

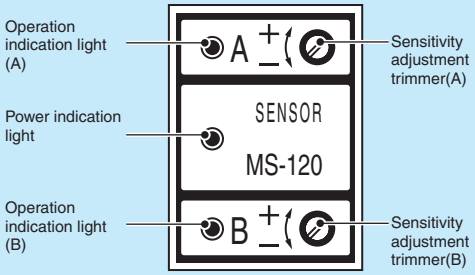

Conformity to socket of mini power relay.

Adjustment Manner

1.Set the sensor head into the position of detection.

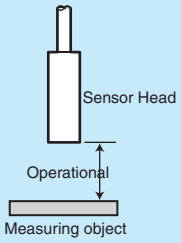

2.Turn the sensitivity adjustment trimmer to clock wise, and make sure that the operation indicator is lighted ON.

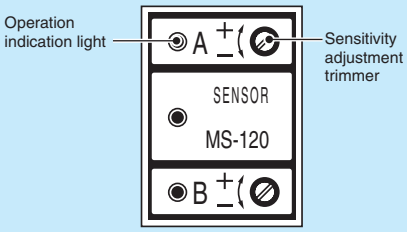

3.Turn the trimmer to counter clock wise to the position of operation indicator ON.

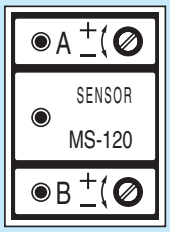

Adjustment for MS-110 and MS-120 are same.

MS-110,120

Controller Dimensions

Sensor Head Dimensions

• CONTROLLER DIMENSIONS (mm)

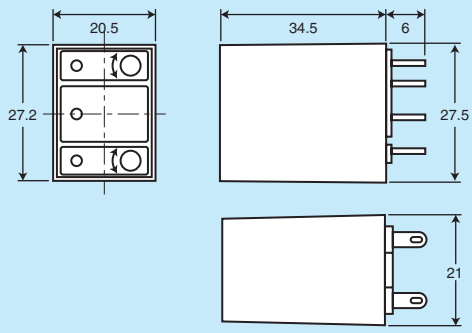

The drawing shows MS-120.The dimension of MS-110, MS-120 is same.

• SENSOR HEAD DIMENSIONS (mm)

H-20 ~ 80

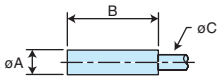

TYPE \ MARK	A	B	C
H-20	2.8	15	1.9
H-30	3.6	15	2.6
H-50	5.4	15	3.2
H-80	8	15	3.2

H-101,141

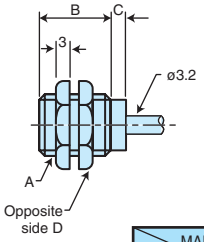

TYPE \ MARK	A	B	C	D
H-101	M10,P=1.0	12	3	14
H-141	M14,P=1.0	15	5	19

H-225

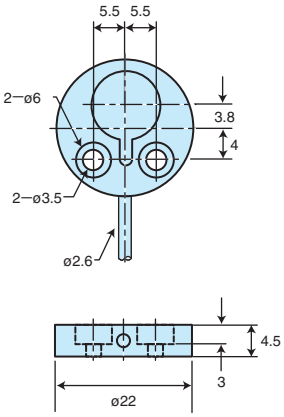

H-162,182

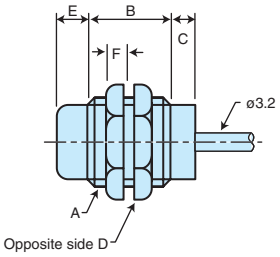

TYPE \ MARK	A	B	C	D	E	F
H-162	M16,P=1.0	14	5	21	6	3
H-182	M18,P=1.0	17	5	24	8	4

H-222,302

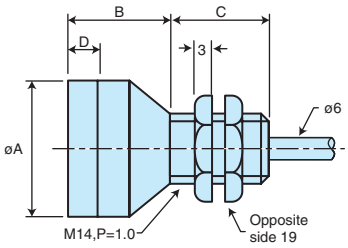

TYPE \ MARK	A	B	C	D
H-222	22	18	14	8
H-302	30	24	14	10

3m of standard coaxial cord is attached to each Sensor-Head

Wiring Connections

MS-110

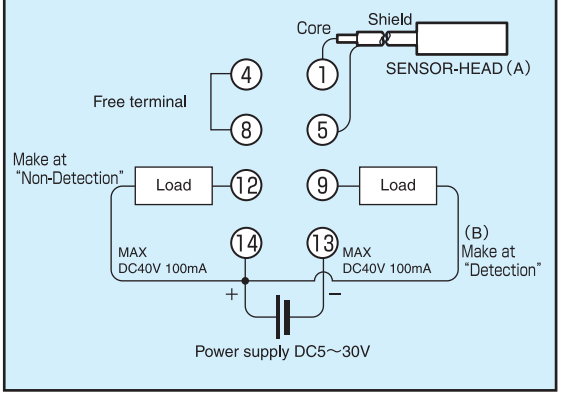

MS-120

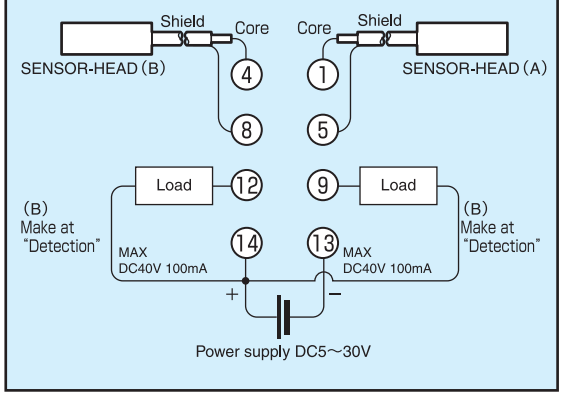

The meaning of (A), (B) are channel (a) and channel (B).

(BOTTOM VIEW)

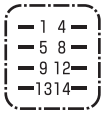

MS-110,120

Caution In Use

• SENSOR HEAD MOUNTING

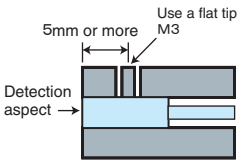

TYPE	MAX. TORQUE
H-20	0.1Nm or less
H-30	0.2Nm or less
H-50	0.5Nm or less
H-80	0.8Nm or less
H-225	1Nm or less

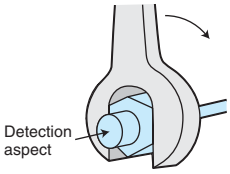

TYPE	MAX. TORQUE
H-101	4Nm or less
H-141	15Nm or less
H-162	30Nm or less
H-182	50Nm or less
H-222	15Nm or less
H-302	15Nm or less

• VHF COAXIAL CABLE & CONNECTORS MATERIALS

・Do not wire with power line, solo-wiring is required.
・High frequency co-axial cable (Impedance 50Ω) and co-axial connector is required for extension with 10m Max.

TYPE	COAXIAL CABLE	COAXIAL CONNECTOR
H-20	0.8D-QEV	BNC-P-1.5,J-1.5
H-30 H-225	RG-174U	
H-50～ H-182	1.5D-QEV	
H-222～ H-552	3D-QEV	BNC-P-3,J-3

*Measuring distance may be changed by cable extension.

• INTERFERENCE OF DETECTION HEADS(Sensitivity : Set to the stable operationg distance about all the detection heads)

	PARALLEL INSTALLATION	OPPOSED INSTALLATION
IN THE CASE OF THE SAME TYPES	 (*3) Contact installation is allowed.	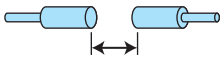 (2a) or more a,: Stable operating distance
IN THE CASE OF DIFFERENT TYPES	 (*3) Contact installation is allowed.	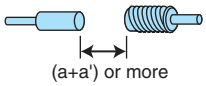 (a+a') or more a, a' : Stable operating distance of each detection head/

*1:When two or more sensor heads are installed in parallel, arrange the sensor heads connected to A and B channels of controller, so that the sensor heads may line up in order of A, B, A, B ···· (MS-110) is connected to channel A, while MS-120 is connected to A and B channel
*2:If two type of sensor head are connected with MS-120, bigger diameter of sensor head must be connected to channel B.
*3:Sealed type sensor head can be set in parallel and closely contact.

Data

• Operating characteristic on temperature change (Typical example)

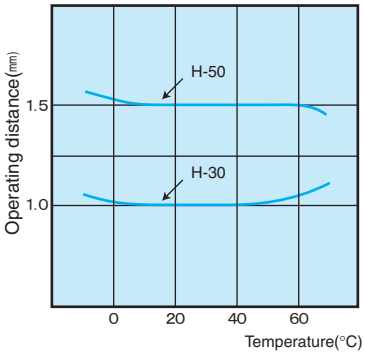

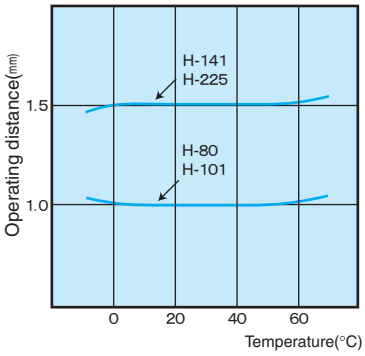

• How to measure
Controller····Constant temperature on 20°C.

Sensor Head····Variable temperature

Operating distance(Verticaldetection)····

H-30	—	1.0mm
H-50	—	1.5mm
H-80	—	2.0mm
H-101	—	2.0mm
H-141	—	4.0mm
H-225	—	4.0mm

Object····Standard detection material (SS400 90ø 5t)
Setting is taken place under the above condition, how the operating distance changes in accordance with the temperature change is shown in the graphs.

• Condition of measurement
For each data, measuring range shall be set by 50% of stable operation. Work (SS400 ø90) is set by under fixed temperature of 23°C, then collect data by 10°C of temperature changing.

• Operating characteristics by horizontal direction. (Case in point)

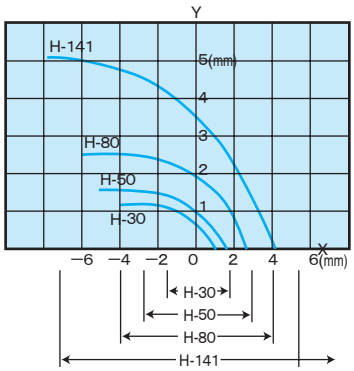

How to measure
On each sensor head, the characteristic in the case of sensitivity, being in accordance with stable operating distance, is shown.

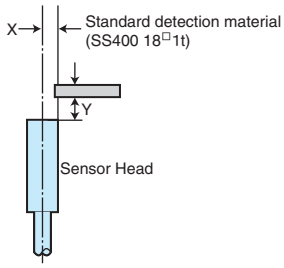

※Data etc. has a case where it differs from catalog spec according to an operating condition etc. with a reference value.

High Accuracy Proximity Sensor
(Multifunction type)

MS-550

SENTEC

Multifunction by 8 selection switch.

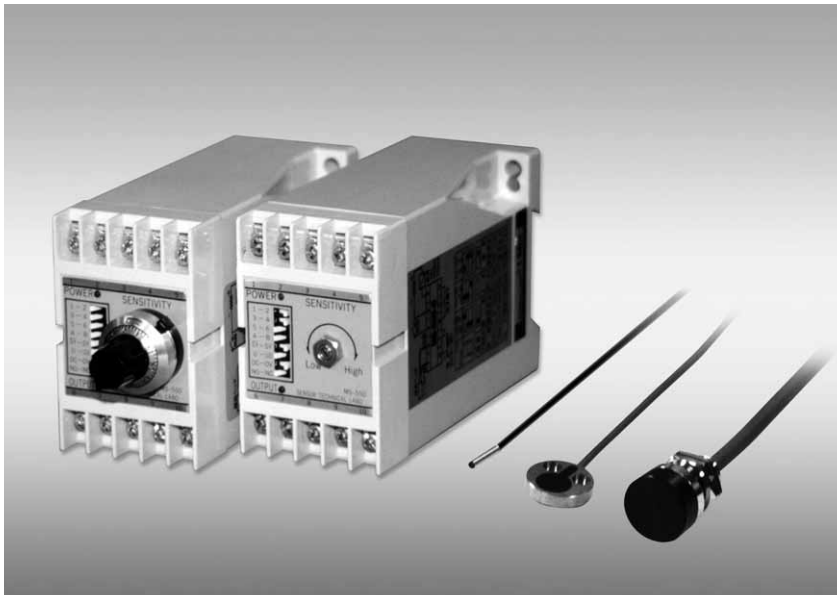

Features

- Multifunction by 8 selection switch.
- High accuracy and stability.
- AC or DC free supply power.
- The controller housing is subject to DIN standard.
- Wide detection range.
- Provide high class trimmer control(MS-550DT/AT).
- Potentiodial (MS-550DP/AP).

Applications

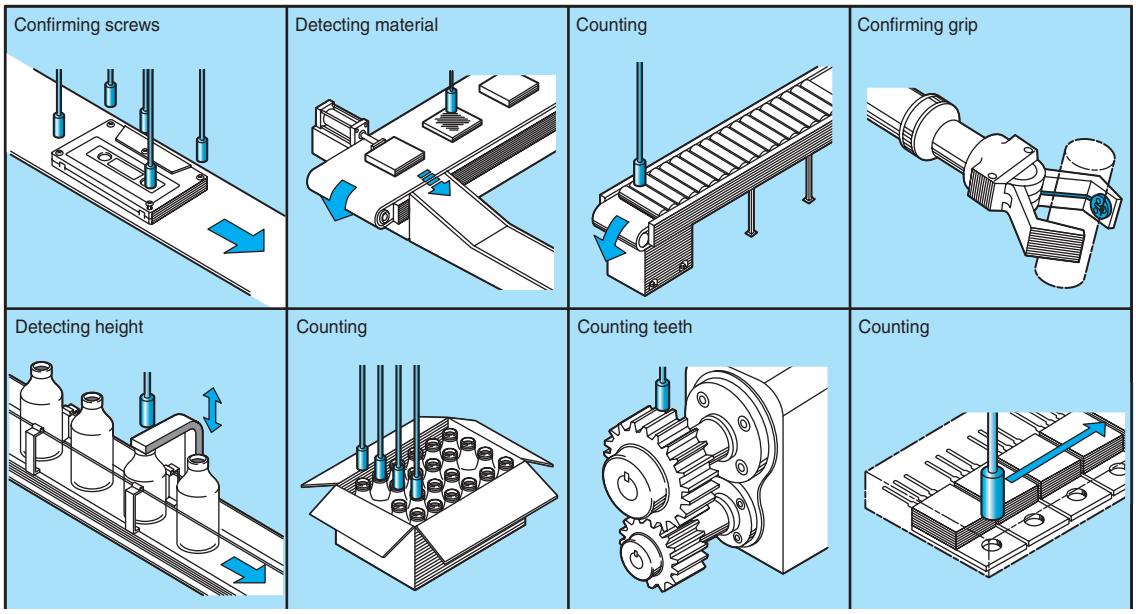

MS-550

Controller Specifications

ITEM \ TYPE		MS-550-DT	MS-550-DP	MS-550-AT	MS-550-AP
POWER SUPPLY		DC10 ~ 30V, ripple 10% or less		80 ~ 240VAC 50/60Hz	
CONSUMPTION		60mA		2VA	
CONTROL OUTPUT	RELAY OUT	—		AC250V 2A(resistive),1C	
	NON-CONTACT	NPN open-collector out 60V 150mA max. or Voltage out 0.5V/8V, selectable by switch			
RESPONSE TIME	RELAY OUT	—		10msec	
	NON-CONTACT	1msec			
FUNCTIONS	SENSITIVITY ADJ.	22 turn trimmer	10 turn dial pot.*1	22 turn trimmer	10 turn dial pot.*1
	HEAD SELECTOR	Mode selectable by 3 DIP switch (1-6)			
	INTERFERENCE	Protected by selectable excitation frequency (A-B)			
	SYNCHRO SWITCH	Direct action / Reverse action, selectable ($\overline{SY}$-SY)			
	OFF DELAY	0/100msec, selectable(non-contact out only) (0-100)			
	OUTPUT	NO-NC, selectable (NO-NC)			
INDICATION		Red LED for output			
AMBIENT TEMPERATURE		-10 ~ 60°C			
AMBIENT HUMIDITY		35 ~ 85%RH, non-condensing			

*1 Provided by lock function.

Sensor Head Specifications

TYPE \ ITEM		TYPE	OUTSIDE DIA.(mm)	DETECTABLE STABLE(mm)*1	DISTANCE MAX.(mm)*2	HYSTERESIS (mm)	REPEATABLE*4	STABILITY*5	WORKING TEMPERATURE
CYLINDEICAL (SEALED)	HA-20 *6		ø2.8	0 ~ 0.8	2	0.03	0.002	0.3% / °C	-10°C ~ 60°C
	HA-30		ø3.6	0 ~ 1	3	0.03	0.001	0.2% / °C	
	HA-50		ø5.4	0 ~ 1.5	3.5	0.03	0.001	0.05% / °C	
	HA-80		ø8.0	0 ~ 2.5	6	0.02	0.001	0.05% / °C	
SCREWED (SEALED)	HA-101		M10	0 ~ 2.5	6	0.02	0.001	0.05% / °C	
	HA-141		M14	0 ~ 5	11	0.01	0.002	0.04% / °C	
	HA-181		M18	0 ~ 6	15	0.01	0.002	0.05% / °C	
NON-SEALED	HA-162		M16	0 ~ 7	16	0.01	0.002	0.04% / °C	
	HA-182		M18	0 ~ 10	22	0.01	0.004	0.05% / °C	
	HA-222		ø22	0 ~ 12	30	0.05	0.005	0.06% / °C	
	HA-302		ø30	0 ~ 17	40	0.08	0.01	0.06% / °C	
	HA-552		ø55	0 ~ 25	50	0.1	0.05	0.08% / °C	
THIN	HA-225		4.5t	0 ~ 5	12	0.01	0.002	0.04% / °C	

*1 Stable measuring range:Measuring range satisfied by accuracy.
*2 Max. measuring distance:Max. distance is measured by standard medium (SS400 90ø 5t) with neglect of accuracy.
*3 Differential distance:Difference between conversion and reconversion function.
*4 Repeatability: Error of measuring distance by repeat function with certain condition.
*5 Movable value of operating distance in range of operating temperature (Measuring with 50% of stable operating distance)
*6 The dedicated controller must be selected for using HA-20.
**The data of specification is based on using standard length of sensor head cable (3m). The distance shall be slightly shortened by extension cable.

MS-550

Controller Dimensions

Mounting Dimensions

• CONTROLLER DIMENSIONS (mm)

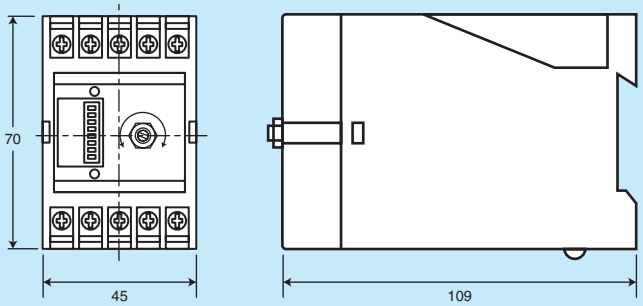

*The drawing shows MS-550-□T.

• MOUNTING DIMENSIONS (mm)

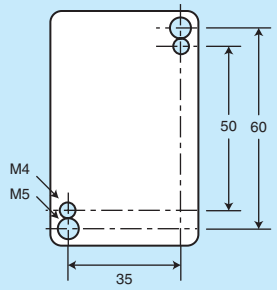

DIN rail mountable
(Conform to DIN46277)

Sensor Head Dimensions

• SENSOR HEAD DIMENSIONS (mm)

HA-20 ~ 80

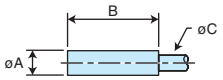

TYPE \ MARK	A	B	C
HA-20	2.8	15	1.9
HA-30	3.6	15	2.6
HA-50	5.4	15	3.2
HA-80	8	15	3.2

HA-101,141,181

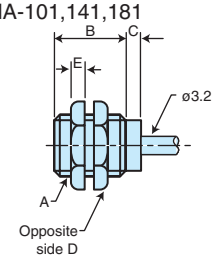

TYPE \ MARK	A	B	C	D	E
HA-101	M10,P=1.0	12	3	14	3
HA-141	M14,P=1.0	15	5	19	3
HA-181	M18,P=1.0	25	5	24	4

HA-162,182

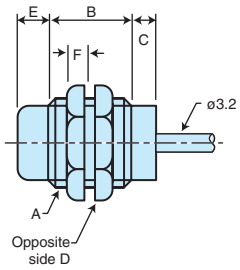

TYPE \ MARK	A	B	C	D	E	F
HA-162	M16,P=1.0	14	5	21	6	3
HA-182	M18,P=1.0	17	5	24	8	4

HA-222,302

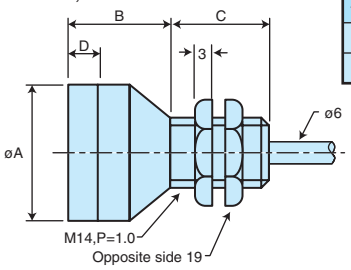

TYPE \ MARK	A	B	C	C
HA-222	22	18	14	8
HA-302	30	24	14	10

HA-225

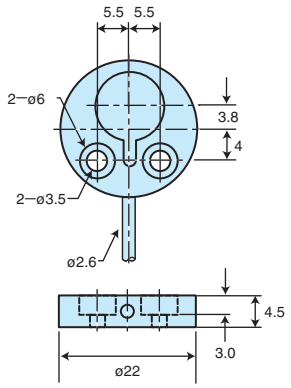

HA-552

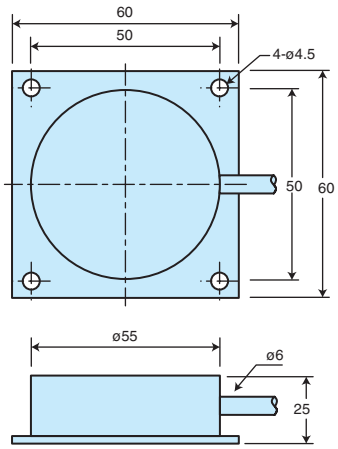

3m of standard coaxial cable is attached to each Sensor-Head

MS-550

Wiring Connection

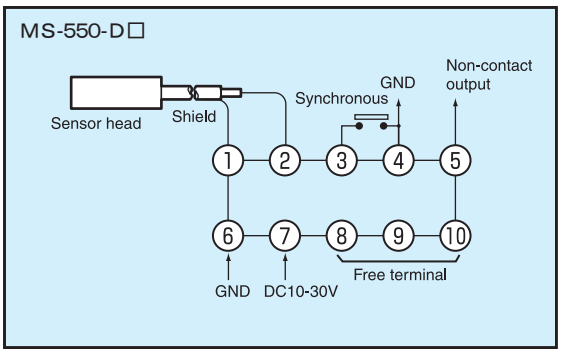

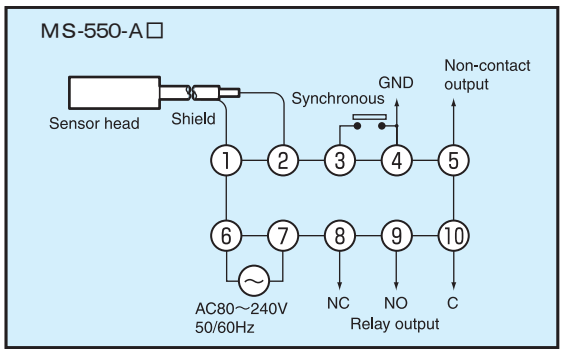

Time Chart

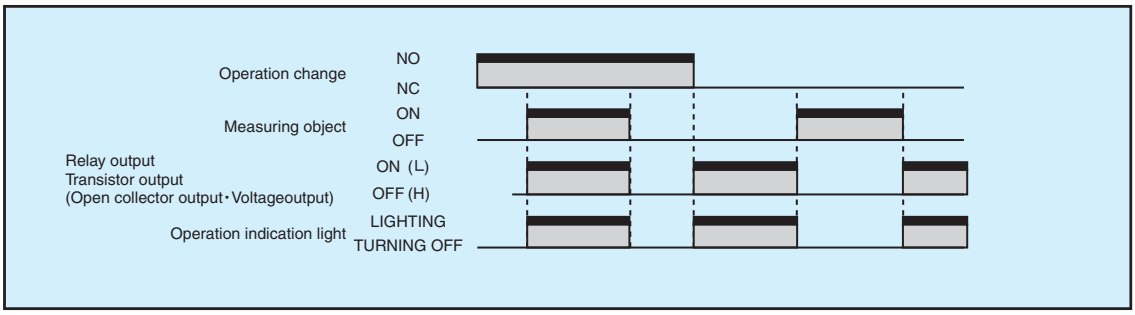

Putput

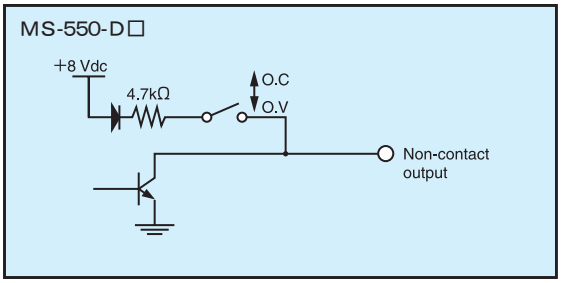

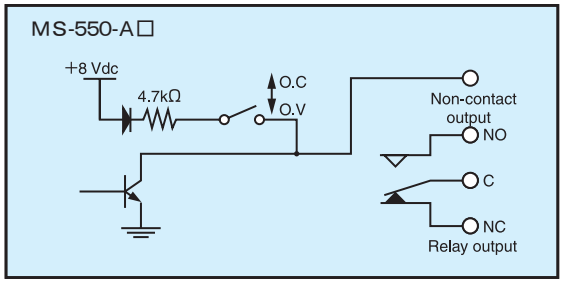

Controller Front View

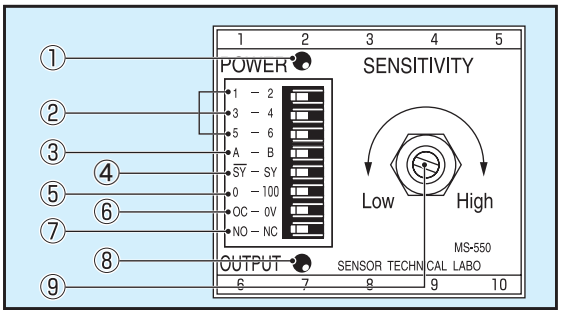

①Power indicator Green

②Senser head selector

HA-30	HA-50	HA-80以上
1—2 ▬ 3—4 ▬ 5—6 ▬	1—2 ▬ 3—4 ▬ 5—6 □	1—2 ▬ 3—4 □ 5—6 □

③Interference protection
A : Standard B : Excitation frequency change

④Synchronous mode selector

$\overline{SY}$-SY	▬	Reverse action
$\overline{SY}$-SY	□	Direct action

⑤Off delay timing selector(Non-contact out only)

0-100	▬	Offdelay 0msec
0-100	□	Offdelay 100msec

⑥Non-contact output mode selector

O.C-O.V	▬	NPN open-collector out
O.C-O.V	□	Voltage output(0.5V/8V)

⑦Relay output mode selector

NO-NC	▬	Trip at detaction
NO-NC	□	Trip at non-detaction

⑧Output indicator
Red

⑨Sensitivty adjusting trimmer :
22turns 10 turn potentiometer
optionally

※Off delay: The function which the output is continuously kept even detection object is gone.

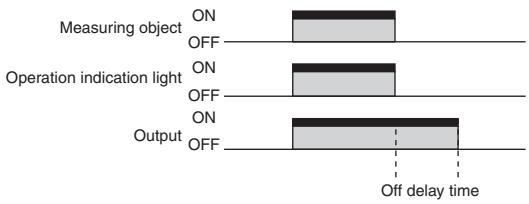

MS-550

Caution In Use

• SENSOR HEAD MOUNTING

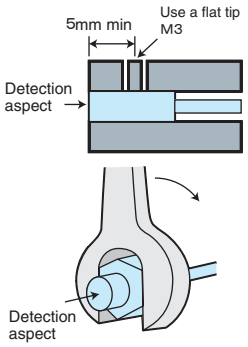

TYPE	MAX. TORQUE
HA-20	0.1Nm or less
HA-30	0.2Nm or less
HA-50	0.5Nm or less
HA-80	0.8Nm or less
HA-101	4Nm or less
HA-141	15Nm or less
HA-162	30Nm or less
HA-182	50Nm or less
HA-222	15Nm or less
HA-225	1Nm or less
HA-302	15Nm or less
HA-552	1Nm or less

• MUTUAL INTERFERENCE

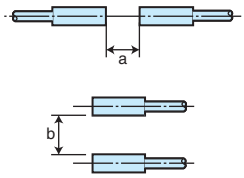

Refer to the table list for minimum distance between the plural sensor heads set at opposing or parallel position. (with selector B)

mm

TYPE \ MARK	a	b
HA-20	2	0
HA-30	3	0
HA-50	8	0
HA-80	16	0
HA-101	18	0
HA-141	20	0
HA-225	20	0
HA-162	25	4
HA-181	28	0
HA-182	32	5
HA-222	48	8
HA-302	50	10
HA-552	60	10

• VHF COAXIAL CABLE & CONNECTORS MATERIALS

- Do not wire with power line, solo-wiring is required.
- High frequency co-axial cable (Impedance 50Ω) is required for extension with 10m Max.

TYPE	COAXIAL CABLE	COAXIA CONNECTOR
HA-30 HA-225	RG-174U or equiv.	BNC-P-1.5,J-1.5 or equiv.
HA-50 ~ HA-182	1.5D-QEV or equiv.	
HA-222 ~ HA-552	3D-QEV or equiv.	BNC-P-3,J-3 or equiv.

※Measuring distance may be changed by cable extension.

• EFFECT OF SURROUNDING FERROUS MATERIALS

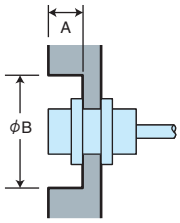

mm

TYPE \ MARK	A	ϕB
HA-162	9	30
HA-182	10	32
HA-222	18	42
HA-302	24	60
HA-552	25	100

Data

• DATA (TEMPERATURE)

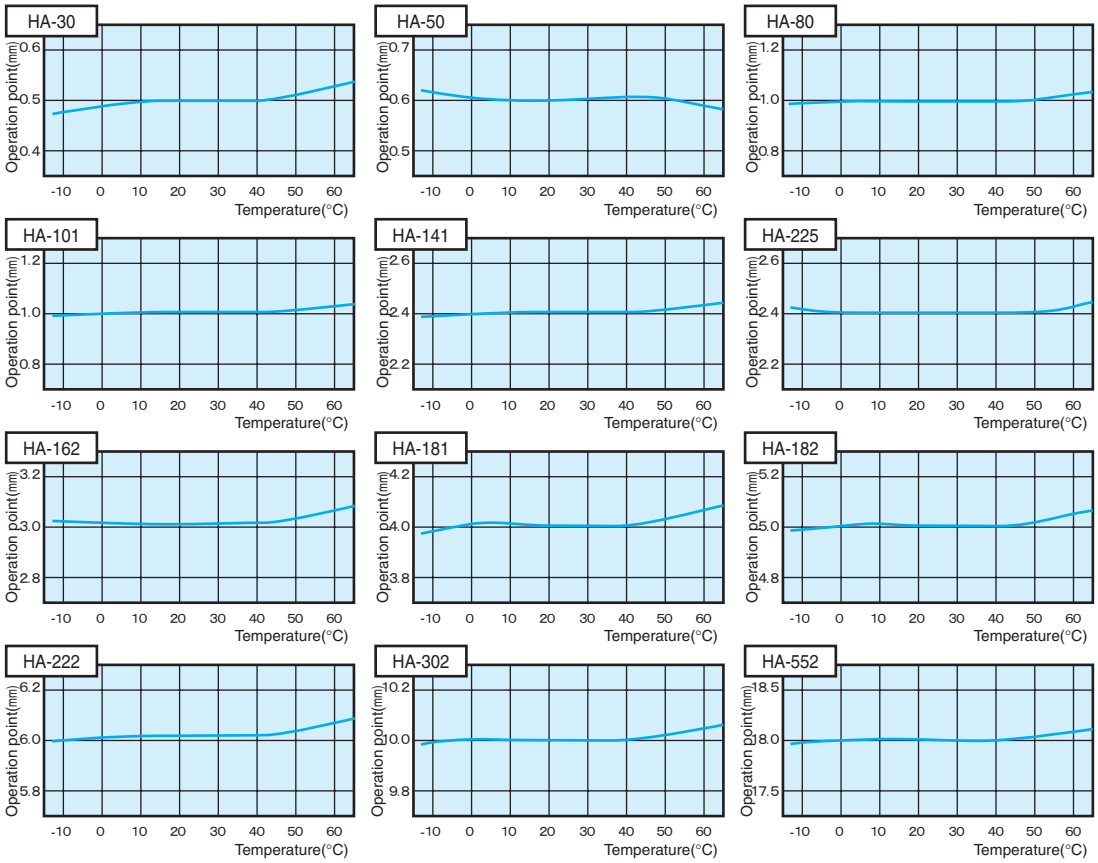

Condition of measuring : Operating distance is set by 50% of stable operating distance, fixed condition of measuring object (Feø90), the temperature shall be changed by ±10°C per hour from the basing temperature of 23°C, data is collected when the temperature is stable.

MS-550

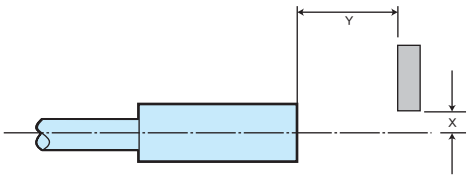

Data from lateral
The operation distance is adjusted at 50% & 100% of stable detection distance. The distance is measured from reference axis operation point by applicable object which is horizontally moved at detection face.

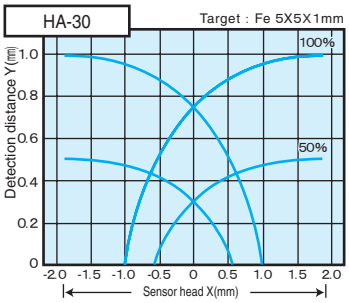

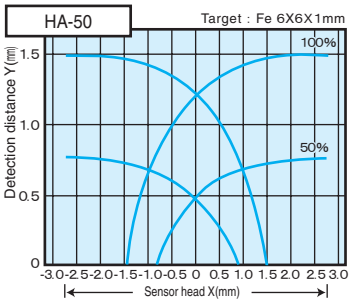

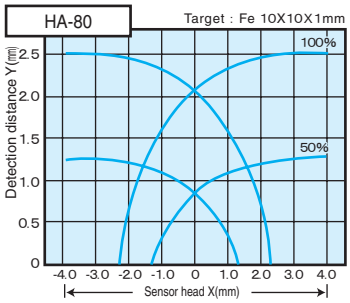

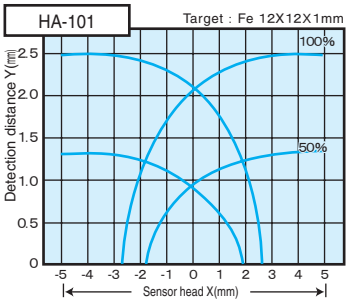

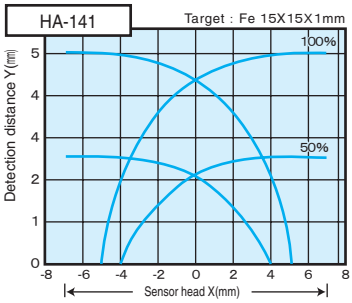

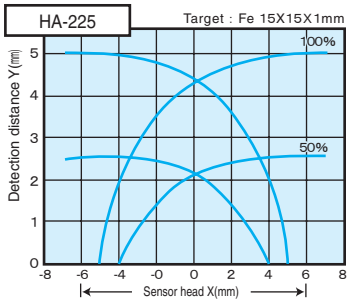

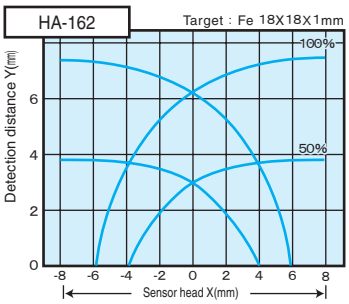

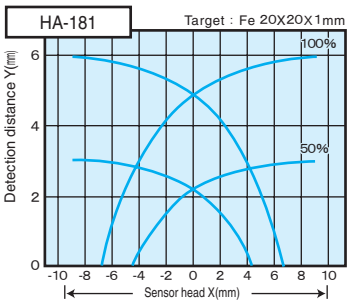

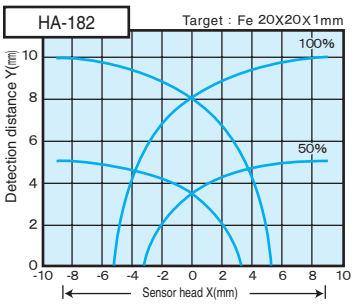

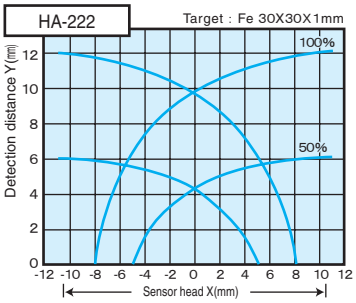

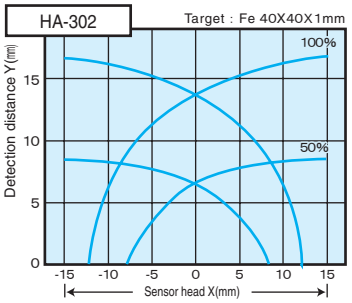

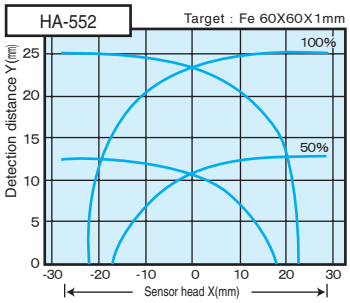

MS-550

Data (Materials)

Detection object is square metal place with thickness of 1mm. The operation distance is adjusted at 100% of stable detection distance. Detection distance of Y mm is detected by changing X mm square of detection object.

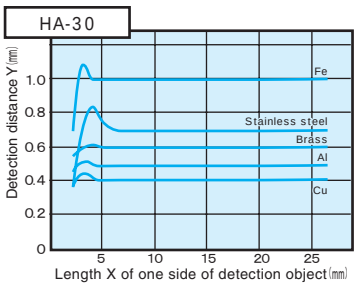

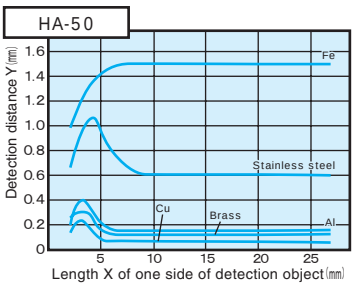

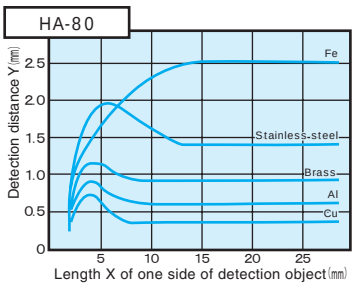

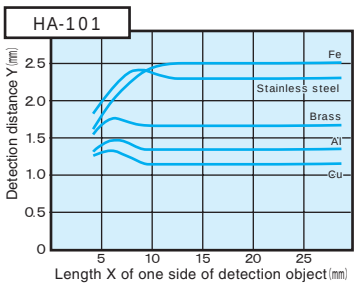

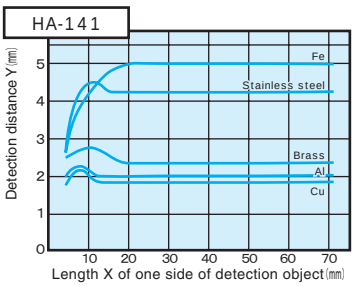

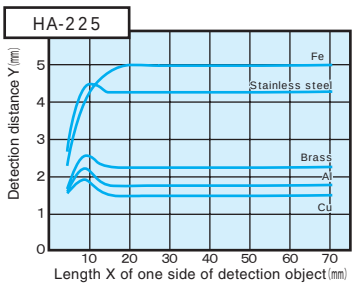

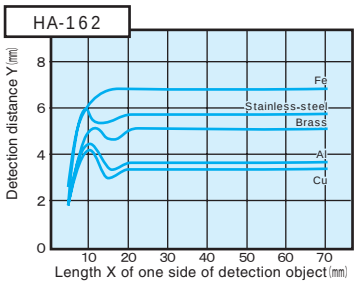

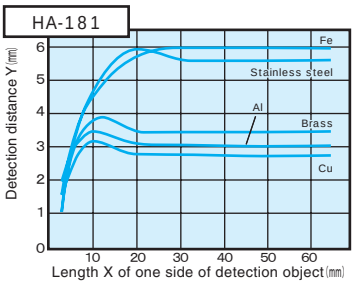

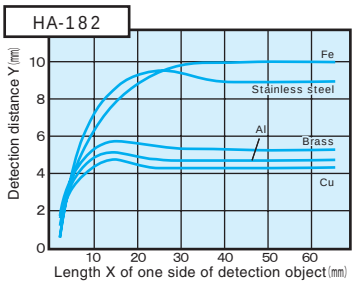

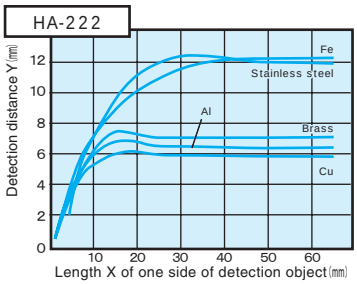

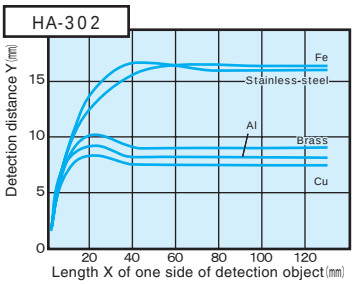

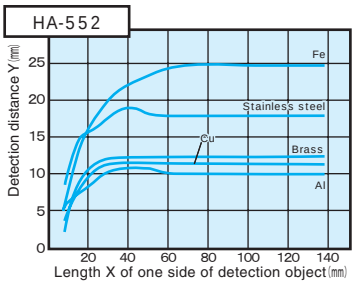

※Data etc. has a case where it differs from catalog spec according to an operating condition etc. with a reference value.

Pass Detection Sensor
(Built-in Amplifier)

FMS-112

SENTEC

Built-in Amplifier Type Pass Detection Sensor.

Feature

- It is compact and easy to handle with the built-in amplifier in sensing part.
- Easy to change cable length and wiring.
- Dimension of detection hole can be selected by purpose of usage.

Specification

ITEM \ TYPE	FMS-112-10	FMS-112-12	FMS-112-15	FMS-112-20
POWER SUPPLY	12 ~ 24VDC ±20%(ripple : 10% or less)			
CURRENT CONSUMPTION	20mA or less			
SENSITIVITY ABJUSTMENT	single-turn trimmer(270°)			
ALARM OUTPUT	NPN open-collector, 40VDC 100mA max.			
OUTPUT PROTECTION	Zener barrier			
RESPONSE TIME	1mS			
SENSOR BORE	ø10	ø12	ø15	ø20
MINIMUM TARGET (REMARKS)	M2.6 nut	M2.6 nut	M2.6 nut	M3.0 nut
OFF DELAY FUNCTION	0 sec (std.) but 0.1, 0.2, 0.5 sec(opt.)			
OPERATING TEMPERATURE	-10 ~ 60°C, no-condensing			

Application

Detection of screw and rivet passing through

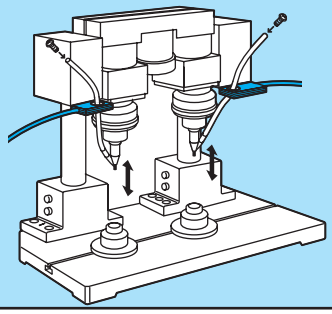

Confirmation og punching

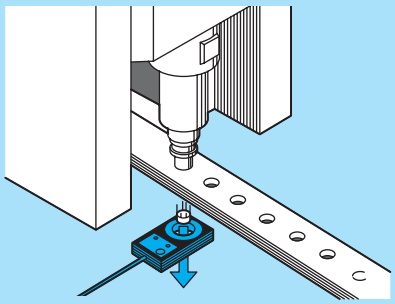

FMS-112

Wiring Connection

Output

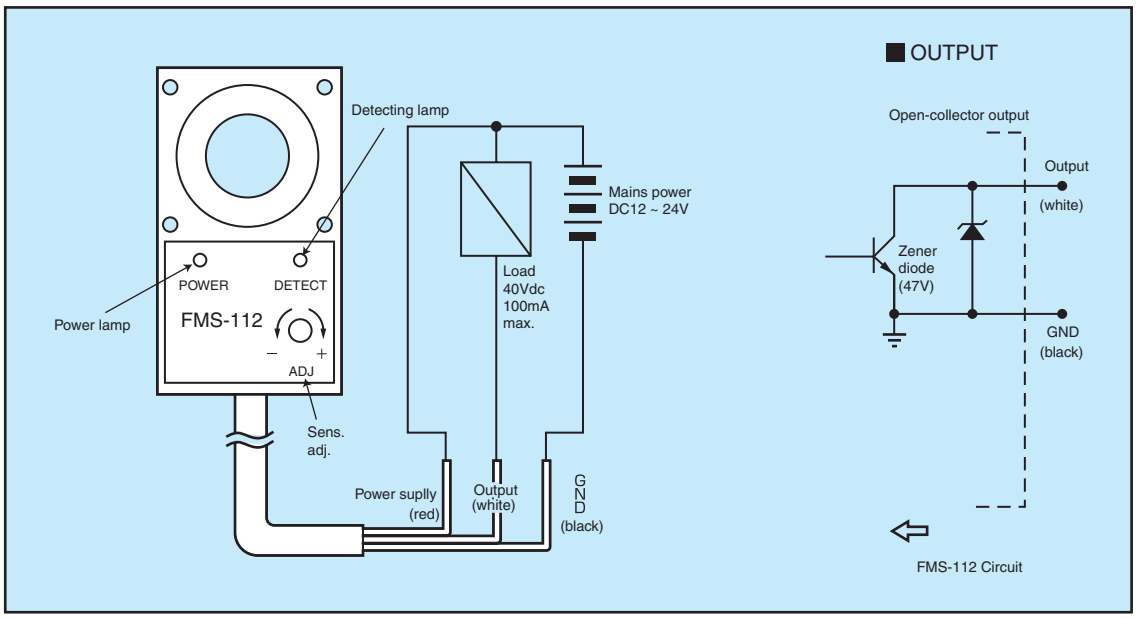

Dimensions

Type

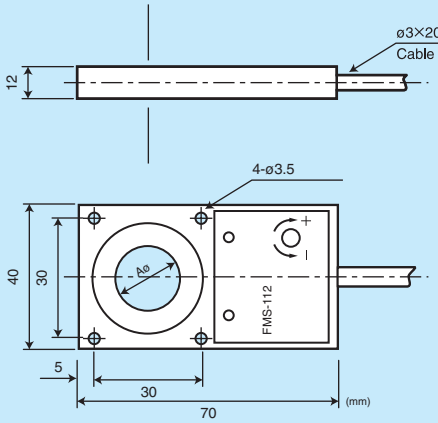

TYPE

FMS-112- □□-□

SENSOR BORE	OFF DELAY TIMER (accuracy: ±25°C)
10 : ø10mm	None : 0 sec (standard)
12 : ø12mm	1 : 0.1 sec (optional)
15 : ø15mm	2 : 0.2 sec (optional)
20 : ø20mm	3 : 0.3 sec (optional)

Caution In Use

(1) The sensor head must be securely mounted with screws. The sensor head may be moved by vibration, and the malfunction may be occurred.

(2) Do not use this sensor for positioning control, since the presence of target in the sensor keeps alarm on.

(3) Connecting cable can be extended by the less than 10Ω of electric resistance.

- Consulted if plural number of sensor head is installed in parallel.
- Do not directly fix to metal face. Otherwise, the sensor is malfunctioned by decreasing sensitivity. Use non-metal spacer with 30mm thickness.

Vibration Detector

SK-500

SENTEC

Adoption of mini voltage sensor.

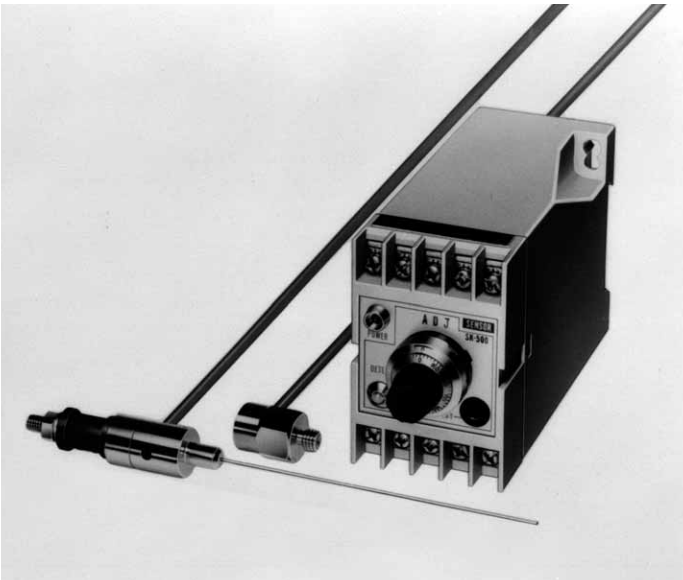

Vibration Detector

Feature

- Adoption of mini voltage sensor.
- Free from the error with type of material.
- Well-prepared function set.

Application

Confirmation of grip. 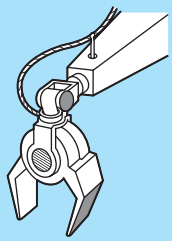	For unattended vehicle, touch sensing on bumper. 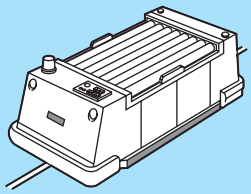	Detecting of intrusion, astray of arms & overtrip. 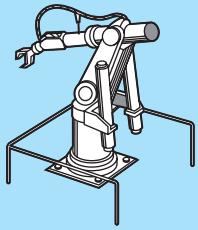	Detection of stirring. 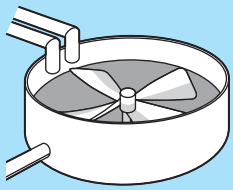
Detecting deterioraton of system & clogging 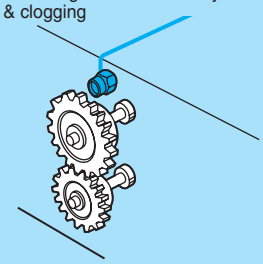	Observing and recording 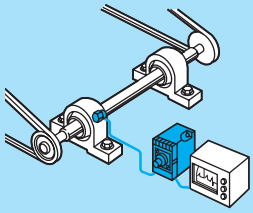	Detection of ejection. 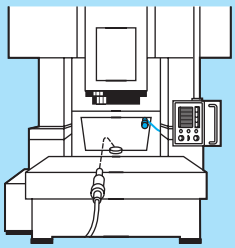	Detecting loosing & side motion. 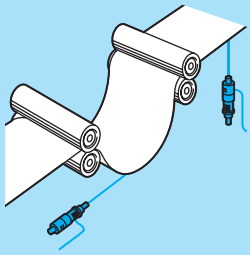

SK-500

Controller Specifications

ITEM \ TYPE	SK-500
DYNAMIC RANGE	0.1 ~ 100Gpk
RESOLUTION	0.01Gpk
RESPONSE FREQUENCY	5Hz ~ 6kHz ±0.5dB 3Hz ~ 5Hz · 6kHz ~ 10kHz ±3dB
ACCURACY	±1% at 100Hz
ANALOG VOLTAGE OUTPUT (MONITOR OUTPUT)	AC 0 ~ 10VAC p-p : (process value)
	DC 0 ~ 5VAC pk : (peak-hold value)
RELAY OUTPUT	2A/250VAC max.(resistive), 1C
RESPONSE TIME	10ms
SENSITIVITY ADJ.	10 ture pot. w/lock
FUNCTION	On-delay timer(0 ~ 2sec)
OPERATING TEMPERATURE	+10 °C ~ 60 °C
OPERATING HUMIDITY	85%RH or less, non-condensing
POWER SUPPLY	AC100/200V ±15%, 50/60Hz
CONSUMPTION	3VA or less

Sensor head Specifications

ITEM \ TYPE	KH-114 ROUND CABLE	KH-314 FLAT CABLE	KH-414 SCREW	KH-214 PIANO WIRE
SENSITIVITY *1	20mVp-p/G ±20%			
RADIAL SENSITIVITY	±10% max			
LINEARITY	100G *2			
ALLOWABLE ACCELERATION	1000G			
RESPONSE FREQUENCY	5Hz ~ 6kHz(±0.5dB)			
RESONANCE POINT	About 8kHz			
OUTPUT IMPEDANCE	10kΩ			
COAXIAL CABLE *3	co-axial 1.5D-QEV 3m		RG-316 3m	co-axial 1.5-QEV 3m
MAX.TORQUE	3Nm *4		3Nm *4	
AMBIENT TEMPERATURE	-10 ~ 60 °C			

KH-114 Screw type	KH-314 screw fixed type	KH-414 drip-proof · degreasing type	KH-214 Piano wire type
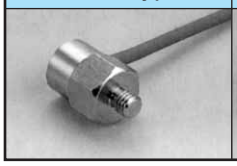			

*1 Sensor Sensitivity : The voltage which is generated on both sensor wire and shielded wire by the combination of SK-500.

*2 G : 1G=9.8m/sec^2

*3 High frequency co-axial cable is required for extension with 50m Max. Co-axial connector (BNCP-1.5JJ · J-1.5JJ) must be used to connect.

*4 3Nm : Tightening torque of 3Nm is approximately 30kgfcm.

SK-500

Controller Dimensions

Wiring Connections

• CONTROLLER DIMENSIONS (mm)

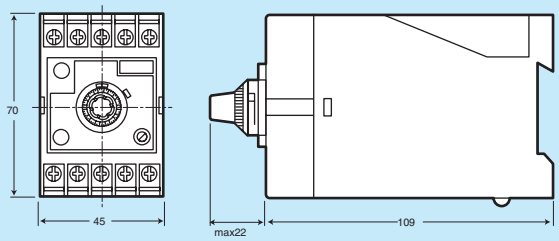

• MOUNTING DIMENSIONS (mm)

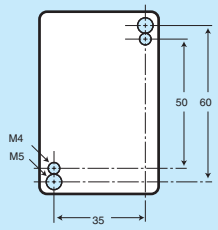

Sensor Head Dimensions

• SENSOR HEAD DIMENSIONS (mm)

KH-114

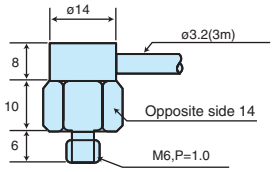

KH-314

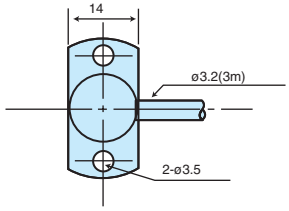

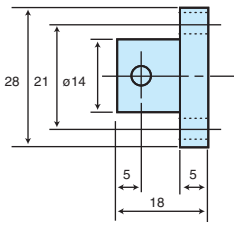

KH-414

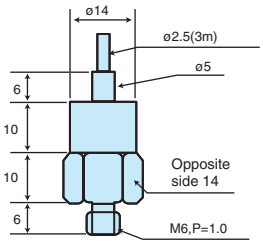

KH-214

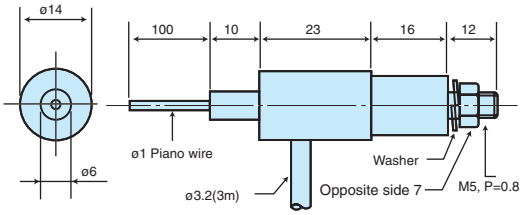

Option for installation of sensor head

(mm)

• Base insulator (Option)
SP-17

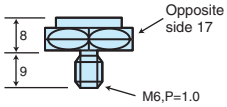

• Magnet (Option)
MB-22

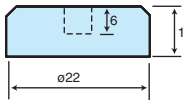

Installation Manner

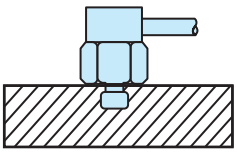

KH-114, KH-414
(M6,P=1.0)

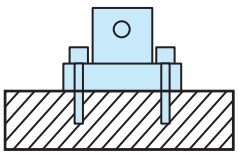

KH-314 M3 Bolt

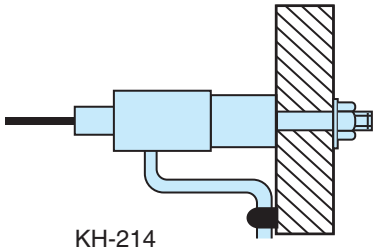

KH-214

• The sensor head must be securely mounted, and cable must be securely and closely mounted to avoid vibration.

• Do not install the plural number of sensor to the non-insulated object. Otherwise, the sensor is malfunctioned by stray current. Using base insulator (Model SP-17 Option) to insulate between sensors.

SK-500

Wiring Connections

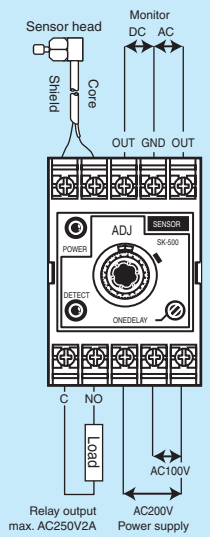

Output Explanation

- Relay output NO contact : Max AC250V 2A (resistive)
  When the vibration is over the setting level, reply is ON.

- Monitor output
  - DC monitor output voltage : DC 0~8V
    Max. voltage of vibration is outputted. Aging of vibration can be recorded by pen recorder.
  - AC monitor output voltage : AC 0~16V(p-p)
    Voltage in proportion to the vibration is outputted. Vibration wave can be monitored by oscilloscope.

Front Panel

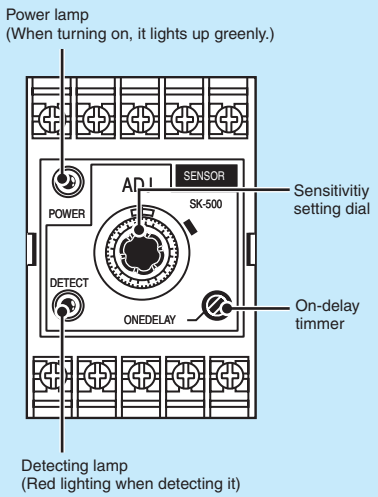

Functional Explanation

- Sensitivity adjustment
  Turn the sensitivity setting dial to clock wise fully. Make sure Red detection indicator is lighted, and turn the sensitivity setting dial to counter clock wise at the position where the detection indicator is OFF. (The sensitivity setting dial contains hysteresis, so the sensitivity must be adjusted for decreasing sensitivity.
- Detection indicator
  Gain shall be increased by turning sensitivity setting dial to clock wise. Detection signal is outputted when the output value from the sensor head is crossed over the internal comparator, and detection indicator is turned to Red. (Set mini On Delay timer)
- On-delay timer (0 ~ 2sec, adj.)
  On delay timer is a detection signal integration type and accumulate the signal which close over the internal comparator in temporally. Detection signal is outputted when the setting level is passed. For 0 sec setting, signal is outputted when the internal comparator is passed. For 2 sec setting, signal is outputted when the internal comparator is passed 2 sec continuously. (Note: On delay time of detection output shall be longer than setting time when the duty ratio is small during integration.)

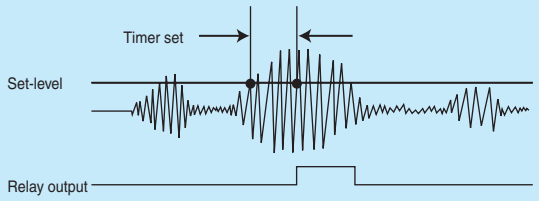

Note: Setting time and actual time may be different due to the oscillation wave of integral timer.

Caution In Use

(1)Sensor cable must be fixed to avoid fluctuation of output by swinging or vibration of cable or strong pressure.

(2)Sensor must be fasten by less than regulated torque. The sensitivity shall be fluctuated by condition of fastening.

(3)The vibration level must be adjusted by installing to actual usage. (The characteristics of vibration shall be changed mounting position and fastening.)

*Data etc. has a case where it differs from catalog spec according to an operating condition etc. with a reference value.

Digital Meter Relay

SG-4500

SENTEC

Stable detection by adoption of crystal oscillation circuit.

Feature

- Stable detection by adoption of crystal oscillation circuit.
- High sensitivity detection with easy operation.

Specification

ITEM / TYPE		SG-450□□	SG-451□□	SG-452□□	SG-453□□	SG-454□□
INPUT CONFIGURATION		single-ended				
A/D CONVERSION		dual-slope integration with automatioc zero correction				
MEASUREMENT VOLTAGE RANGE		±1V	±2V	±5V	±10V	±20V
DIRECTIONS RANGE		±999.9mV	±1.999V	±19.99V ±9.999V	±9.999V	±19.99V
SETUP RANGE		±9999	±1999	±1999 ±9999	±9999	±1999
READ RATE		2.5/s（9999 display specification is sampling rate 10C/S.）				
INPUT IMPEDANCE		100MΩ or more		±19.99V : 10MΩ ±9.999V : 1MΩ		10MΩ
ACCURACY VOLTMETER		±1.999V : ±0.1%FS±1digit ±9.999mV : ±0.03%FS±1digit		±19.99V : ±0.1%FS±1digit ±9.999V : ±0.03%FS±1digit		
TEMP. COEFFICIENT		±100ppm FS±0.1digit /°C				
POLARITY DISPLAY		(−) Only the input time is "−" indication.				
OVER-RANGE INDICATION		display flashes				
RELAY OUTPUT	OUTPUT*1	1c relay output × 3（HI,GO,LO）				
	CAPACITY	AC250V・0.2Vm, DC30V・1A				
POWER SUPPLY		100V AC ±10% 50/60Hz 200V AC ±10% 50/60Hz （Option DC24V・120mA）				
OPERATING TEMPERATURE		0 to 55°C				
WEIGHT		360g（AC MODEL）				

*1 Manufacture of photo-coupler output specification is also possible as an option. (NPN Open collector type Only)
Manufacture with adigital output is also possible as an option.(BCD・RS-232C)

SG-4500

Terminals Connections & ADJ

• Terminal connections & ADJ

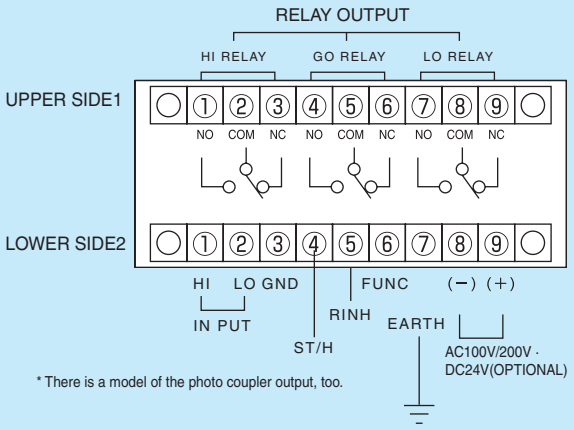

* There is a model of the photo coupler output, too.

HOW " to cling "

Please insert in this machine from a face of panel, attach from the rear surface, and bind tight in a band.

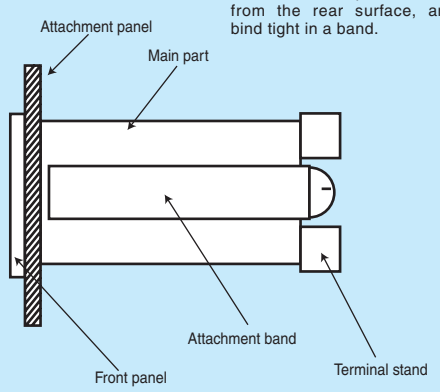

Type

• Digital Meter Relay SG-4500 series ordering information

SG−45 □ − □ − □ − □ − □ − □

Input Range
- 1・・・± 2V input
- 3・・・± 10V input
- 4・・・± 20V input
- 5・・・± 4 ~ 20mA input
- 6・・・± 1 ~ 5V input

Display
- 3・・・1999
- 4・・・9999

Power Supply
- 0 ・・・ AC100V
- 1 ・・・ AC200V
- 2 ・・・ DC24V

Scaling Function
- S・・・ Provided

Function
- PH ・・・ PEAK HOLD
- BH ・・・ BOTOM HOLD
- PPH ・・・ PEAK-PEAK HOLD
- FZ ・・・ FZ(forced-zero)

Output
- B・・・1999
- R・・・9999

*Specified 2.5 C/S or 20 C/S for sampling (Specified 2.5 C/S or 10 C/S for 9999 indication type.)
*Photo-Coupler output (NPN open collector type) is optionally available.

Dimensions

• Dimensions

mm

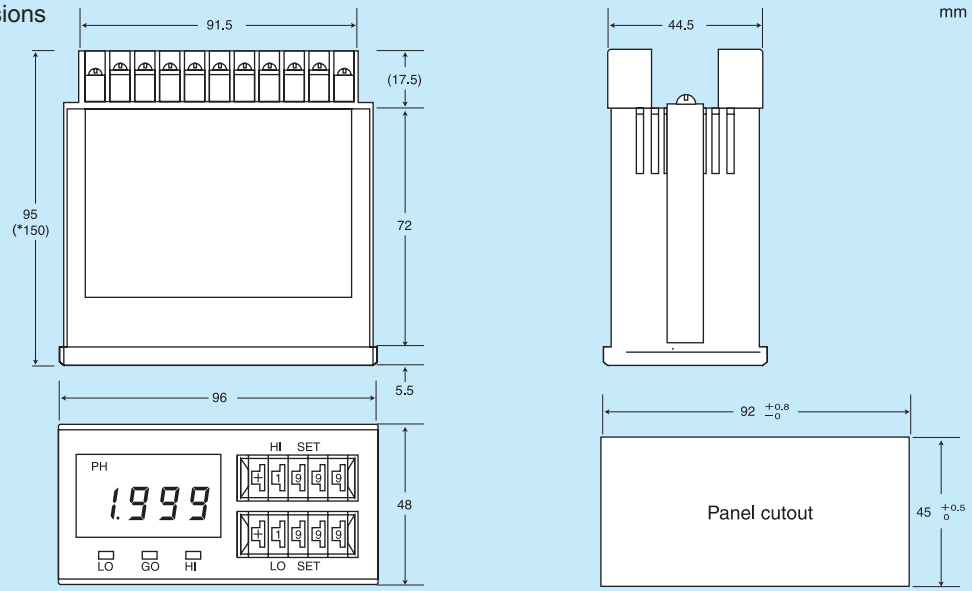

*Data etc. has a case where it differs from catalog spec according to an operating condition etc. with a reference value.

Company Profile of Manufacturer

Name	SENTEC CO., LTD.
Establishment	December, 1981
Capital	¥84.5 million
Product Line-Up	Non-contact High Accuracy Displacement Sensor Laser Displacement Sensor Fiber Optics Displacement Sensor High Accuracy Proximity Sensor Metal Pass Detection Sensor Sub-miniature Photo Sensor Vibration Detector Joint Detector Eccentricity Detector Analog Comparator Digital Panel Meter Related Equipment of Computer

SENTEC

Technology and Idea

SENTEC CO., LTD.

▪ Manufacturer

SENTEC CO., LTD.

4-4-24, Nishi-Nakajima, Yodogawa-ku, Osaka-city,
Osaka, 532-0011, Japan
TEL: 81-6-6304-8858 FAX: 81-6-6302-0700
URL http:// www.sentec.co.jp
E-mail: sentec@sentec.co.jp

2008.07.2000