PAPAMY Horizontal Rotary Compressor

Commercial & Transportation Refrigeration & Cooling

21st Nov 2018

Panasonic Appliances Air-Conditioning Malaysia Sdn. Bhd. (PAPAMY)
Panasonic Appliances Air-Conditioning R&D Malaysia Sdn. Bhd. (PAPARADMY)

Panasonic

PAPAMY Horizontal Compressor Line up

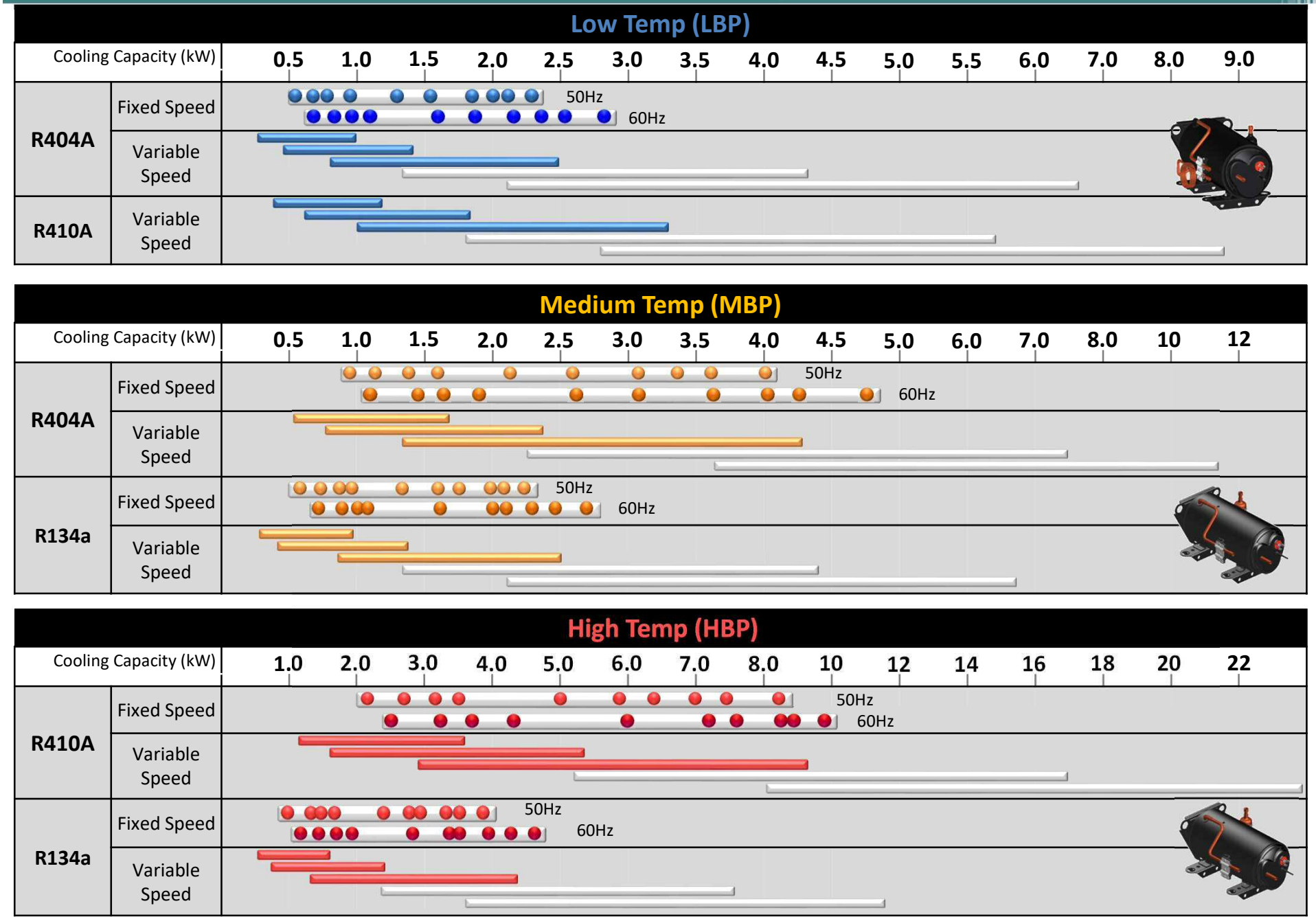

Technology of Horizontal Compressor

For illustration only

Features

❑ Compact & Light weight

Low height & weight design ideal for self-contained showcase, transportation cooling & refrigeration.

❑ Low Vibration

Twin rotary compressor use balanced crankshaft ensure smooth operation

❑ Liquid Injection Technology

Wider operating envelope with evaporating temperature extend down to -45°C.

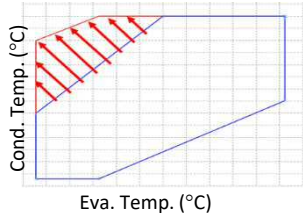

❑ DC Inverter Technology

Fine-tuned temperature control & lesser on-off operation ensure high energy saving for commercial refrigeration application

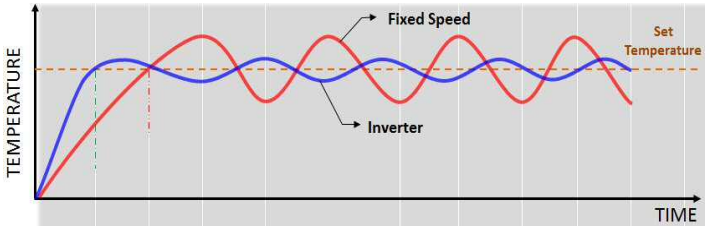

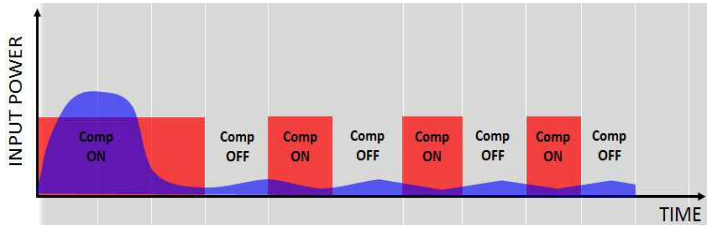

❑ High Reliability

High grade materials & pressurized oil distribution ensure sufficient lubrication on rotating parts.

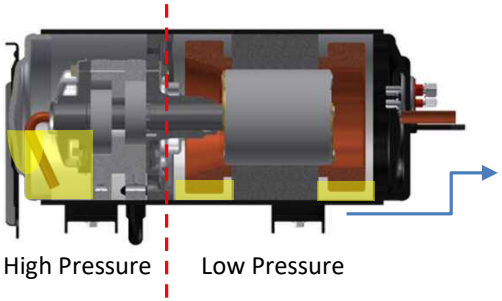

❑ Double Protection

Designed with over-current*1 (OLP) & over-temperature protection (thermostat) to prevent motor burnt

*1 : For fixed speed compressor only; Over-current protection for variable speed compressor depend on inverter drive.

Type of Application

Commercial Business

Plug-in Refrigerator/Showcase

Remote/ split type Refrigerator to Showcase

Transportation Business

Truck Refrigeration

Bus
Air Conditioning

Truck Air Conditioning

■Basic Design

LBP	MBP / HBP
Accessories:	Accessories:
Discharge tube	Discharge tube
Capillary tube assembly	Clamper
Clamper	Bracket
Bracket	Rubber adjustment
Rubber adjustment	Screws
Screws	

Compressor Model List

Low Temp (LBP)

❑ Fixed Speed

Series	Model	Displacement	Nominal Cooling Capacity (W)				Power Supply	Cooling Technology	Pipe Connection	Rating Condition
			R404A		R410A					
		cm^3/rev	50Hz	60Hz	50Hz	60Hz				
R	RSHL09***	9.2	535	670			1 phase , 220-240V , 50Hz 1 phase , 220V , 60Hz 3 phase , 200V , 50/60Hz	Liquid Injection	Brazing	CT 54.4°C ET -23.3°C Suction Temp 18.3°C Liquid Temp 32.2°C Ambient Temp 32.2°C Liquid Injection
	RSHL11***	11.4	675	820						
	RDHL13***	13.2	770	950						
K	KSHL15***	15.1	925	1,125						
	KSHL21***	21.4	1,315	1,595						
	KSHL25***	25.2	1,550	1,880						
J	JSHL27***	27.0	1,800	2,175						
	JSHL30***	30.0	2,000	2,415						
	JSHL32***	31.7	2,115	2,555						
	JSHL35***	35.1	2,340	2,825						

❑ Variable Speed

Series	Model	Displacement	Nominal Cooling Capacity (W)				Power Supply & Modulation range	Cooling Technology	Pipe Connection	Rating Condition
			R404A		R410A					
		cm^3/rev	60rps	Range	60rps	Range				
R	RSHL09X***	9.2	720	300 ~ 960	905	375 ~ 1205	VDC 280 / 25-80rps VDC 520 / 25-80rps	Liquid Injection	Brazing	CT 54.4°C ET -23.3°C Suction Temp 18.3°C Liquid Temp 32.2°C Ambient Temp 32.2°C Liquid Injection
	RDHL13X***	13.2	1,030	430 ~ 1375	1,340	560 ~ 1,785				
K	KDHL24X***	24.0	1,840	765 ~ 2450	2,445	1,020 ~ 3,260				
J	JDHL42X***	42.4	3,250	1,355 ~ 4,335	4,280	1,770 ~ 5,670				
	JDHL65X***	65.0	4,980	2,075 ~ 6,645	6,620	2,740 ~ 8,775				

* Development of JDHL42X*** & JDHL65X*** based on upon request.

Compressor Model List

Medium Temp (MBP)

❑ Fixed Speed

Series	Model	Displacement	Nominal Cooling Capacity (W)				Power Supply	Cooling Technology	Pipe Connection	Rating Condition
			R404A		R134a					
		cm^3/rev	50Hz	60Hz	50Hz	60Hz				
R	RSHB09***	9.2	960	1,130	585	705	1 phase , 220-240V , 50Hz 1 phase , 220V , 60Hz 3 phase , 200V , 50/60Hz	Natural Air Cooling	Brazing	CT 54.4°C ET -6.7°C Suction Temp 35.0°C Liquid Temp 46.1°C Ambient Temp 35.0°C
	RSHB11***	11.4	1,215	1,445	730	875				
	RDHB13***	13.2	1,405	1,670	845	1,015				
K	KSHB15***	15.1	1,565	1,870	965	1,155				
	KSHB21***	21.4	2,220	2,655	1,365	1,640				
	KSHB25***	25.2	2,620	3,135	1,610	1,935				
J	JSHB27***	27.0	3,090	3,625	1,725	2,070				
	JSHB30***	30.0	3,435	4,030	1,915	2,300				
	JSHB32***	31.7	3,630	4,260	2,025	2,430				
	JSHB35***	35.1	4,015	4,710	2,240	2,690				

❑ Variable Speed

Series	Model	Displacement	Nominal Cooling Capacity (W)				Power Supply & Modulation range	Cooling Technology	Pipe Connection	Rating Condition
			R404A		R134a					
		cm^3/rev	60rps	Range	60rps	Range				
R	RSHB09X***	9.2	1,260	525 ~ 1,680	715	300 ~ 955	VDC 280 / 25-80rps VDC 520 / 25-80rps	Natural Air Cooling	Brazing	CT 54.4°C ET -6.7°C Suction Temp 35.0°C Liquid Temp 46.1°C Ambient Temp 35.0°C
	RDHB13X***	13.2	1,795	750 ~ 2,395	1,030	430 ~ 1,375				
K	KDHB24X***	24.0	3,210	1,340 ~ 4,280	1,875	780 ~ 2,500				
J	JDHB42X***	42.4	5,670	2,365 ~ 7,560	3,315	1,380 ~ 4,415				
	JDHB65X***	65.0	8,695	3,625 ~ 11,590	5,080	2,115 ~ 6,775				

* Development of JDHL42X*** & JDHL65X*** based on upon request.

Compressor Model List

High Temp (HBP)

❑ Fixed Speed

Series	Model	Displacement	Nominal Cooling Capacity (W)				Power Supply	Cooling Technology	Pipe Connection	Rating Condition
			R410A		R134a					
		cm^3/rev	50Hz	60Hz	50Hz	60Hz				
R	RSHB09***	9.2	2,150	2,580	1,005	1,210	1 phase , 220-240V , 50Hz 1 phase , 220V , 60Hz 3 phase , 200V , 50/60Hz	Natural Air Cooling	Brazing	CT 54.4°C ET 7.2°C Suction Temp 35.0°C Liquid Temp 46.1°C Ambient Temp 35.0°C
	RSHB11***	11.4	2,670	3,205	1,250	1,500				
	RDHB13***	13.2	3,090	3,710	1,450	1,740				
K	KSHB15***	15.1	3,525	4,230	1,650	1,985				
	KSHB21***	21.4	5,000	6,000	2,345	2,810				
	KSHB25***	25.2	5,900	7,080	2,765	3,320				
J	JSHB27***	27.0	6,320	7,580	2,960	3,555				
	JSHB30***	30.0	7,020	8,425	3,290	3,950				
	JSHB32***	31.7	7,420	8,905	3,480	4,175				
	JSHB35***	35.1	8,210	9,850	3,850	4,615				

❑ Variable Speed

Series	Model	Displacement	Nominal Cooling Capacity (W)				Power Supply & Modulation range	Cooling Technology	Pipe Connection	Rating Condition
			R410A		R134a					
		cm^3/rev	60rps	Range	60rps	Range				
R	RSHB09X***	9.2	2,705	1,125 ~ 3,605	1,230	515 ~ 1,645	VDC 280 / 25-80rps VDC 520 / 25-80rps	Natural Air Cooling	Brazing	CT 54.4°C ET 7.2°C Suction Temp 35.0°C Liquid Temp 46.1°C Ambient Temp 35.0°C
	RDHB13X***	13.2	3,890	1,620 ~ 5,185	1,770	740 ~ 2,360				
K	KDHB24X***	24.0	7,035	2,930 ~ 9,380	3,220	1,340 ~ 4,295				
J	JDHB42X***	42.4	12,430	5,180 ~ 16,570	5,690	2,370 ~ 7,585				
	JDHB65X***	65.0	19,055	7,940 ~ 25,405	8,720	3,635 ~ 11,625				

* Development of JDHL42X*** & JDHL65X*** based on upon request.

Compressor Outline <LBP Comp>

R-series

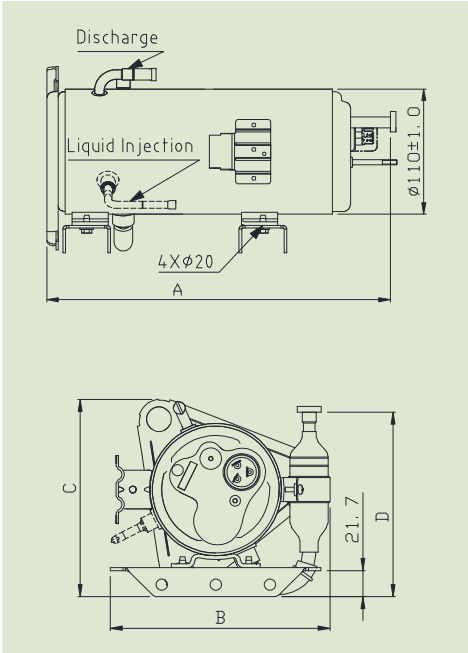

K-series

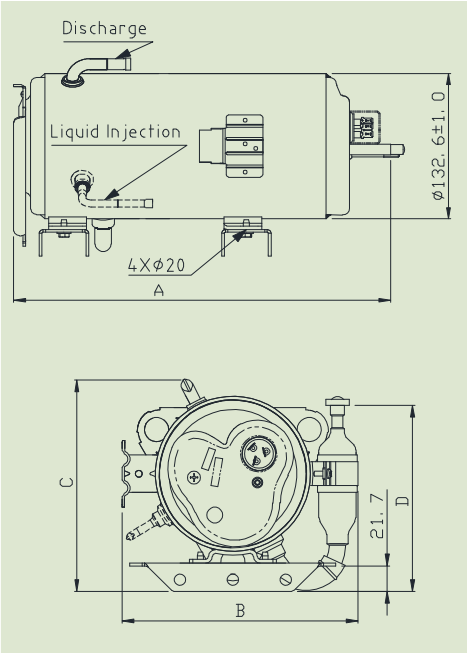

J-series

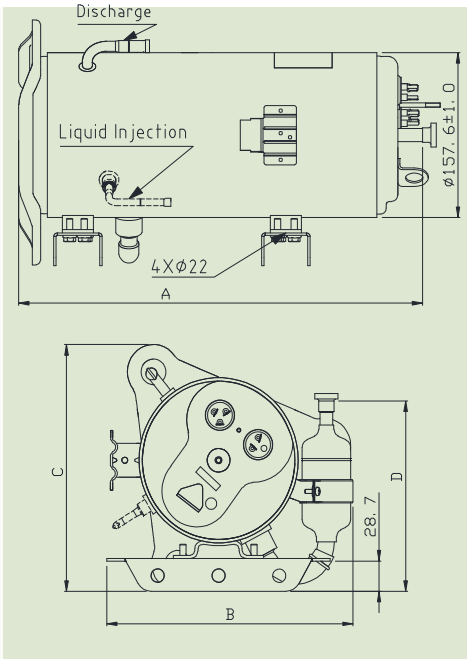

Series	Model	Dimension (mm)			
		A	B	C	D
R	RSHL09***, RSHL11***	302.0	182.7	163.7	153.0
	RSHL09X***				
	RDHL13***	317.0	182.7	163.7	156.0
	RDHL13X***				
K	KSHL15***, KSHL21***, KSHL25***	343.3	200.3	180.3	158.0
	KDHL24X***	338.4			
J	JSHL27***, JSHL30***, JSHL32***, JSHL35***	399.6	247.0	233.9	180.4
	JDHL42X***	368.6			
	JDHL65X***	392.6			

* Presented are preliminary outline for reference; Kindly consult to our Sales office for other outline requirements.

Compressor Outline <MBP/HBP Comp>

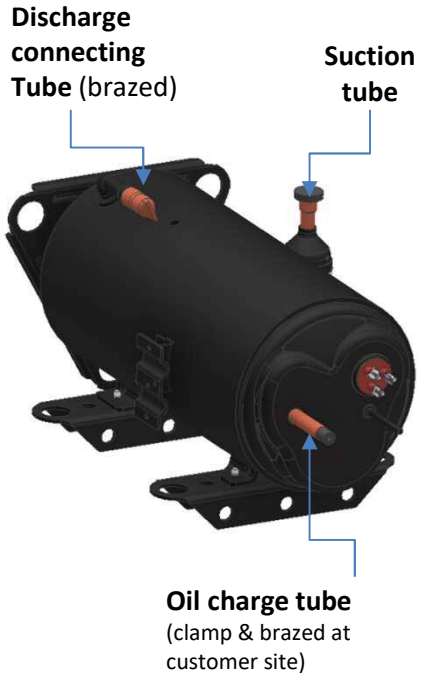

R-series

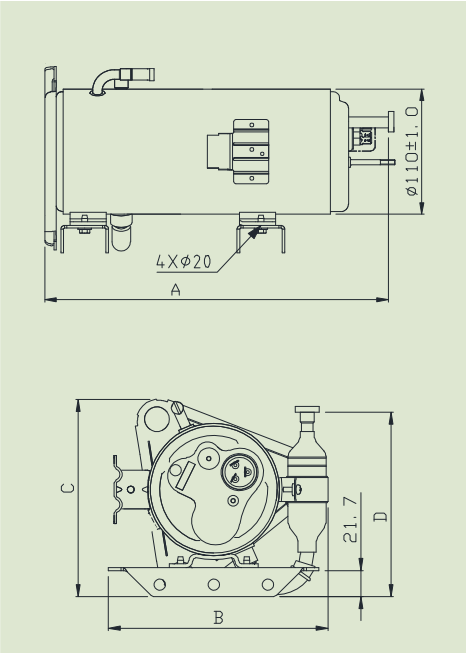

K-series

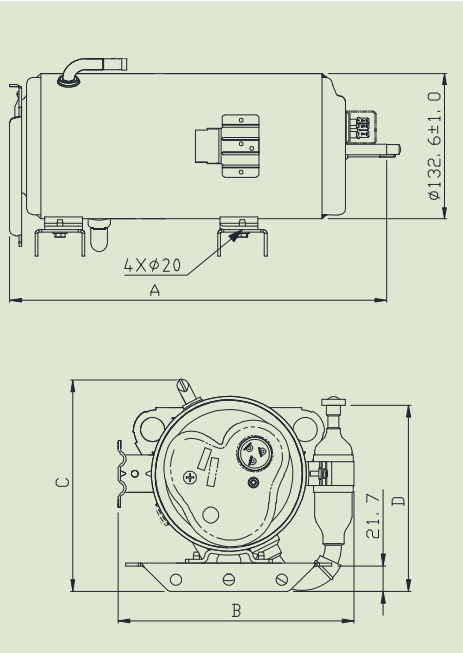

J-series

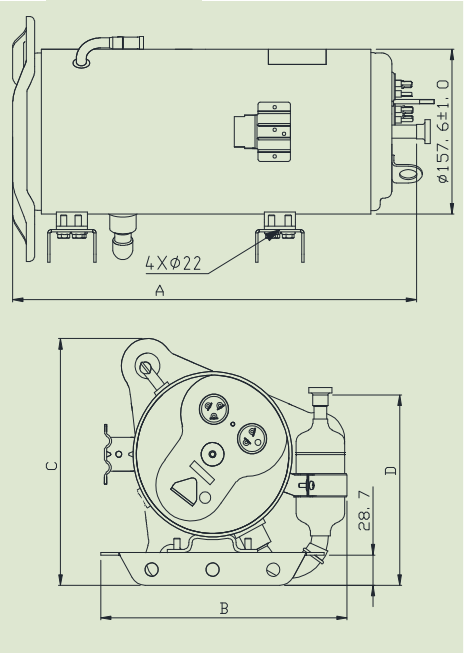

Series	Model	Dimension (mm)			
		A	B	C	D
R	RSHL09***, RSHL11***	302.0	182.7	163.7	153.0
	RSHL09X***				
	RDHL13***	317.0	182.7	163.7	156.0
	RDHL13X***				
K	KSHL15***, KSHL21***, KSHL25***	343.3	200.3	180.3	158.0
	KDHL24X***	338.4			
J	JSHL27***, JSHL30***, JSHL32***, JSHL35***	399.6	247.0	233.9	180.4
	JDHL42X***	368.6			
	JDHL65X***	392.6			

* Presented are preliminary outline for reference; Kindly consult to our Sales office for other outline requirements.

Model Coding

Series
R
K
J

Orientation	
H	Horizontal
V	Vertical

Displacement
cm^3/rev

Refrigerant	Refrigerant Oil PVE
R404A	1
R404A / R407C	3
R407C	4
R410A	5
R134a	6
R404A / R134a	7
(R448A/R449A)	8

Compressor Type

Small modification

K	D	H	L	2	4	X	5	4	A	A

Structure	
S	Single Cylinder
D	Double Cylinder

Cooling Feature	
B	Basic
L	Liquid Injection

Power									
D	1 ϕ	220 / 240 V	50 Hz		Q	3 ϕ	208 / 230 V	60 Hz	<UL>
E	1 ϕ	220 / 240 V	50 Hz	<VDE>	R	1 ϕ	100 V	50Hz	
F	1 ϕ	208 / 230 V	60 Hz	<UL>	S	1 ϕ	100 V	50 / 60 Hz	
G	1 ϕ	200 / 220 V	50 Hz		T	1 ϕ	110 V	60 Hz	
H	1 ϕ	220 V	60 Hz		U	1 ϕ	115 V	60 Hz	<UL>
J	1 ϕ	220 V	50 Hz	<GB>	W	3 ϕ	380 V	60 Hz	
K	1 ϕ	200 V	50 / 60 Hz		X	3 ϕ	Inverter	Brushless	
M	3 ϕ	200 V	50 / 60 Hz		Y	3 ϕ	220 V	60 Hz	
N	3 ϕ	Inverter	Induction		Z	3 ϕ	Inverter	Brushless	<GB>
P	3 ϕ	380 V	50 Hz	or					
	3 ϕ	380 / 415 V	50 Hz	or					
	3 ϕ	400 V	50 Hz						