DRAWING CLASS B

VERSION P01

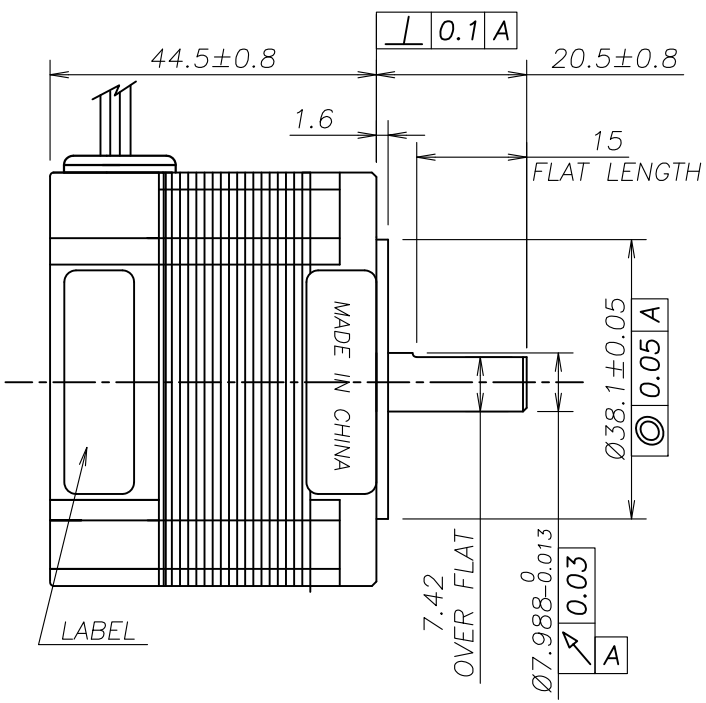


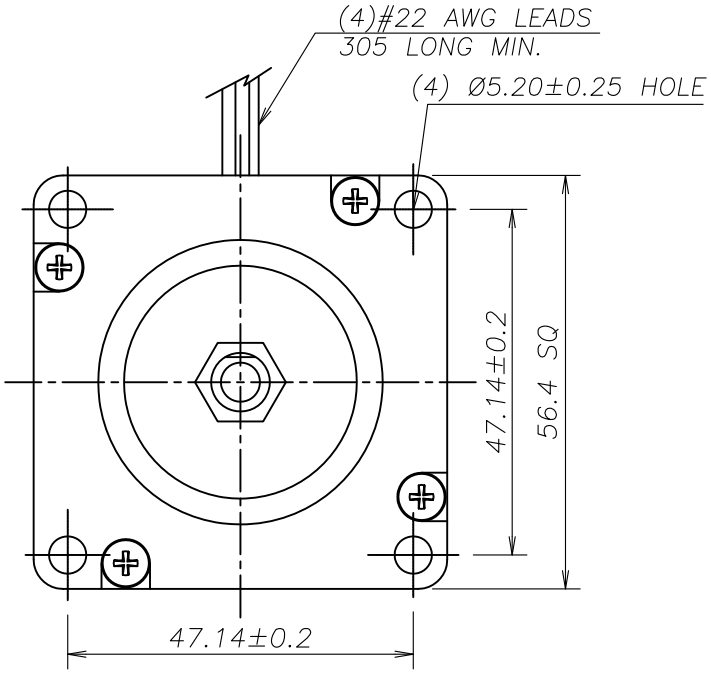


| BIPOLAR SPECIFICATIONS | |
|---|---|
| RATED VOLTAGE (Vm) DC | 3.0 |
| AMPS/PHASE | 2.0 |
| RESISTANCE/PHASE Rm (OHMS) | 1.5 |
| INDUCTANCE/PHASE (MH @ 1000Hz) | 4.8 |
| STEP ANGLE (DEGREES) | 1.8 |
| STEP ACCURACY (NON-ACCUM)% | ±5 |
| HOLDING TORQUE (N-cm) MIN | 71 |
| ROTOR INERTIA (g-cm$^2$) | 141 |
| WEIGHT APPROX. (kg) | 0.482 |

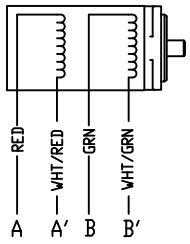


FULL 4 STEP SEQUENCE
2 PHASE ON

CW ROT'N (LEAD END)

| STEP | A | B | C | D |
|---|---|---|---|---|
| 1 | ON | OFF | ON | OFF |
| 2 | ON | OFF | OFF | ON |
| 3 | OFF | ON | OFF | ON |
| 4 | OFF | ON | ON | OFF |
| 1 | ON | OFF | ON | OFF |

| REV | ECN NO. | DESCRIPTION | BY | DATE |
|---|---|---|---|---|
| P01 | | FIRST ISSUE | Sam Yu | 02/28/2018 |

SCALE 1:1 | SHEET 1 OF 1

CUSTOMER: IMS

CUSTOMER P/N

UNLESS OTHERWISE SPECIFIED
1. ISO 2768-1 CLASS m
<=6 ±.1 >6~30 ±.2
>30~120 ±.3 >120~400 ±.5
ALL ANGLES ±.5° BREAK ALL EDGES 0.5
FILLET & RADII = 0.2
2. DIMENSION UNIT: mm
3. CPK:

| SYMBOL | CPK |
|---|---|
| ⊙ | >2.0 |
| ⊙ | >1.67 |
| ⊙ | >1.33 |
| ⊙ | NO SPEC |

DWN BY: Sam Yu | DATE: 02/28/2018 | ROHS: YES

CHK BY | DATE | QTY: 1

APRV BY | DATE | A4

OUTLINE/ASSY NO. | FINISH: BLACK LAM

CONFIDENTIAL INFORMATION OF ELECTROCRAFT

ElectroCraft

TITLE: STEPPER MOTOR

DWG NO.: TPE23M-71-003