SANMOTION

ECO PRODUCTS

AC SERVO SYSTEMS

R

Ver.5

SANYO DENKI

CONCEPT 1 Easy Set-up for Optimal Operation

Auto-Tuning

A new auto-tuning algorithm improves system response by providing functions such as inertia identification, 5 auto-tuning modes, 30 levels of response, and parameter setting auto-save.

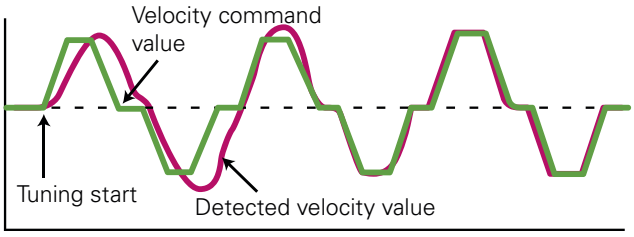

Small Compact Servomotors

Motor size and volume is reduced by as much as 30% and 25% respectively compared to current models. The world's smallest high torque high performance servomotor. (as of Sept 2006)

Multi-Axis Servo Amplifier

6-axis model can reduce installation width by up to 42% compared to six single-axis models.Power loss is reduced by up to 20% compared to current single-axis models.

Protection code IP67

Protection code is IP67 for all models.

*Shaft feedthrough and cable end are excluded.

All-in-One Control

Configurable parameters allow you to switch between control modes for torque, position or velocity.

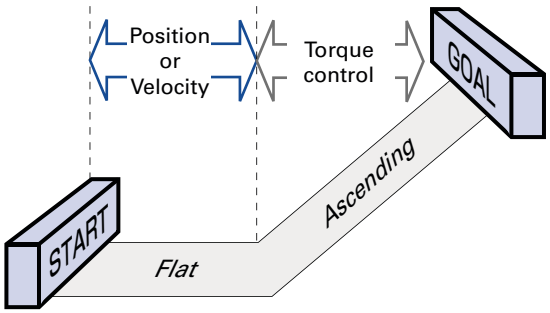

*Uniaxial servo amplifier only

Power Supply Harmonic Suppression

Equipped with DC reactor connection terminals as standard feature for supressing power supply harmonics.

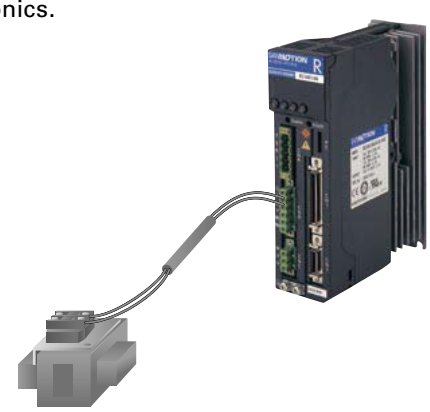

5-digit LED Display, Built-in Operator

Parameter setting, monitoring and alarm tracing can be easily done using the built-in operator.

*Multi-axis is done through a personal computer.

Test Function (JOG)

On-board JOG operation function is available for testing motor and amplifier connection without the need to connect to host device.

Setup Software

The setup software allows you to set parameters, view graphical displays of monitored position, velocity or torque waveforms, and perform system analysis.

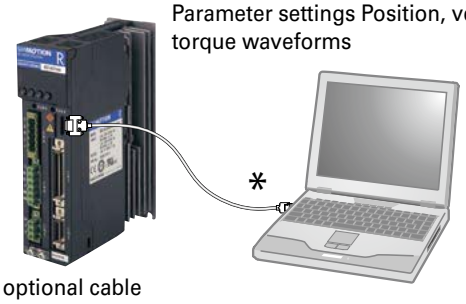

*Use optional cable AL-00490833-01 for PC connection

Multiaxial Monitor Function

The setup software allows up to 15 amplifiers to be monitored. (Single axis only)

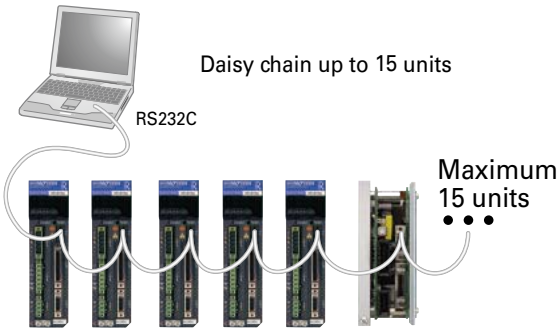

*PC connection cable is optional

Built-in Regeneration Resistor

It is possible to choose whether to equip regenerative resistance or not. If the regenerative resistance capability is insufficient, it is possible to use an external regenerative resistance unit.

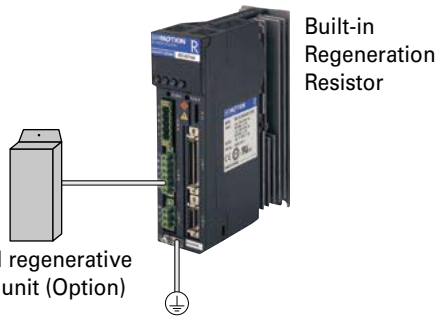

Built-in Dynamic Brake

A built-in dynamic brake provides emergency stop capability. The six kinds of motion sequences for the dynamic brake can be selected by parameter setting.

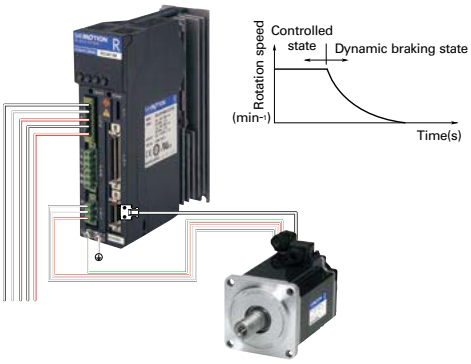

CONCEPT 2 Improved Precision and Reduced Cycle Time

High Response

A 4th-order notch filter reduces phase delay to suppress mechanical resonance and improve velocity response of equipment.

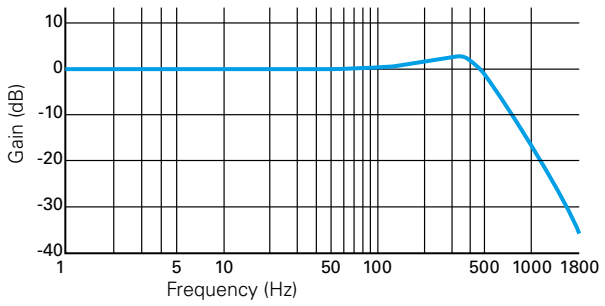

Shorter Position Settling Time

A new algorithm drastically shortens positioning settling time for equipment.

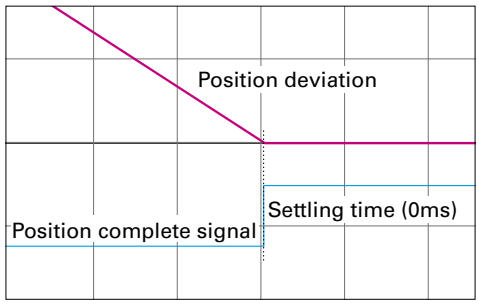

Example of positioning settling time in highly rigid machinery 5ms/div

Vibration Suppression Control

With feed-forward vibration suppression control, vibrations at the processing point and base of a machine can be suppressed through simple tuning procedures. Up to 4 types of vibration control frequencies can be selected.

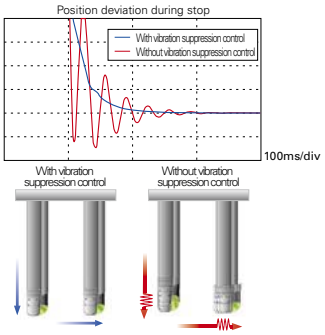

Disturbance Suppression

It is possible to control impacts from other axes in case of multiaxial constitution, by using the new disturbance observer with extended applicable frequency.

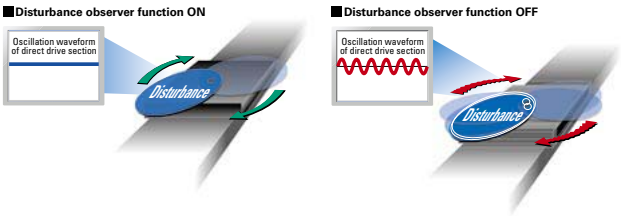

Expanded Power Range

Maximum instantaneous stall torque is improved by 5% to 26%, and maximum rotation speed is increased from 5000min^{-1} to 6000min^{-1} compared to current models.

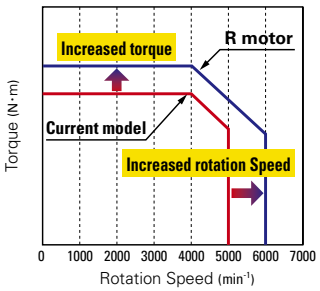

Command Follow-up Control

Performance of the positioning doubled in comparison with current models by adoption of new positioning control algorithm and new speed control algorithm. And position deviation≒0 is achieved.

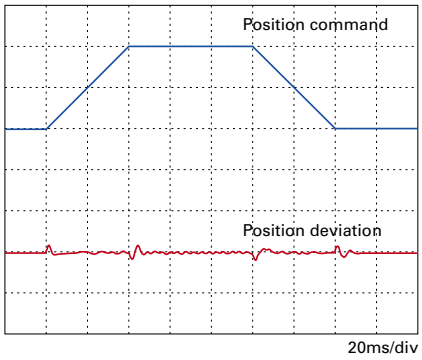

CONCEPT 3 Reduced Running Costs

Low Cogging Torque

Using our proprietary technology, the motor's low cogging torque delivers smooth rotation that is ideal for high precision processes and vibration-sensitive conveyor applications.

Comparison of cogging torque waveforms

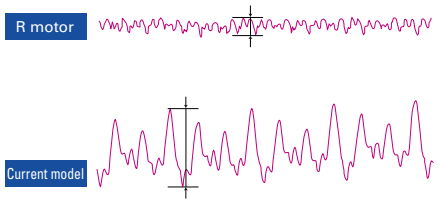

(*Image)

20% Reduction in Power Loss

An energy conserving power module reduces main circuit power loss by up to 20%.

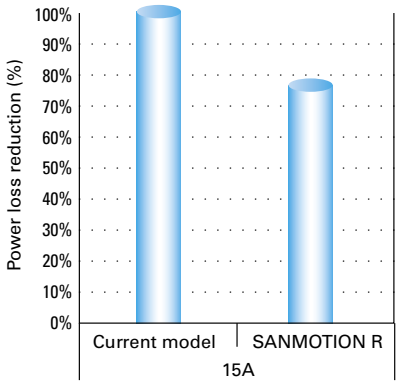

High Resolution

Support for encoders up to 17 bit (131,072 divisions) is available for high resolution control.

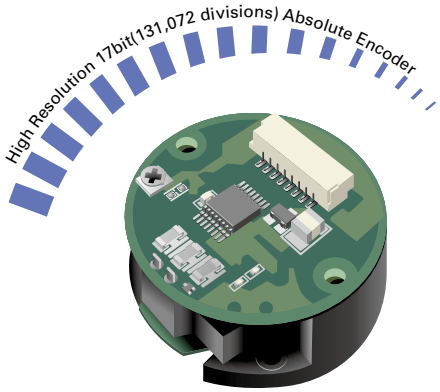

Full Closed-Loop Control

Optional support for full closed-loop control using linear scale and other high resolution encoders mounted on device side.

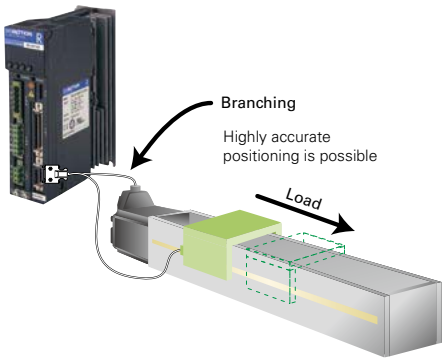

*available for single-axis only

Servo Motor Standard Model Number List

200V System

Power Voltage	Encoder models	Rated Output	Motor Flange Size	Holding Brake	CE·UL	Model No.
200V	Battery backup method absolute encoder (PA035C)	30W	40mm sq.	—	—	R2AA04003FXP00
				—	Standard	R2AA04003FXP00M
				yes (24V)	—	R2AA04003FCP00
				yes (24V)	Standard	R2AA04003FCP00M
		50W	40mm sq.	—	—	R2AA04005FXP00
				—	Standard	R2AA04005FXP00M
				yes (24V)	—	R2AA04005FCP00
				yes (24V)	Standard	R2AA04005FCP00M
		100W	40mm sq.	—	—	R2AA04010FXP00
				—	Standard	R2AA04010FXP00M
			60mm sq.	—	—	R2AA06010FXP00
				—	Standard	R2AA06010FXP00M
				yes (24V)	—	R2AA06010FCP00
				yes (24V)	Standard	R2AA06010FCP00M
		200W	60mm sq.	—	—	R2AA06020FXP00
				—	Standard	R2AA06020FXP00M
				yes (24V)	—	R2AA06020FCP00
				yes (24V)	Standard	R2AA06020FCP00M
			80mm sq.	—	—	R2AA08020FXP00
				—	Standard	R2AA08020FXP00M
				yes (24V)	—	R2AA08020FCP00
				yes (24V)	Standard	R2AA08020FCP00M
		400W	60mm sq.	—	—	R2AA06040FXP00
				—	Standard	R2AA06040FXP00M
			80mm sq.	—	—	R2AA08040FXP00
				—	Standard	R2AA08040FXP00M
				yes (24V)	—	R2AA08040FCP00
				yes (24V)	Standard	R2AA08040FCP00M
		750W	80mm sq.	—	—	R2AA08075FXP00
				—	Standard	R2AA08075FXP00M
				yes (24V)	—	R2AA08075FCP00
				yes (24V)	Standard	R2AA08075FCP00M
		1000W	86mm sq.	—	—	R2AAB8100FXP00
				—	Standard	R2AAB8100FXP00M
				yes (24V)	—	R2AAB8100FCP00
				yes (24V)	Standard	R2AAB8100FCP00M
	Absolute encoder for incremental System (PA035S)	30W	40mm sq.	—	—	R2AA04003FXH00
				—	Standard	R2AA04003FXH00M
				yes (24V)	—	R2AA04003FCH00
				yes (24V)	Standard	R2AA04003FCH00M
		50W	40mm sq.	—	—	R2AA04005FXH00
				—	Standard	R2AA04005FXH00M
				yes (24V)	—	R2AA04005FCH00
				yes (24V)	Standard	R2AA04005FCH00M
		100W	40mm sq.	—	—	R2AA04010FXH00
				—	Standard	R2AA04010FXH00M
			60mm sq.	—	—	R2AA06010FXH00
				—	Standard	R2AA06010FXH00M
				yes (24V)	—	R2AA06010FCH00
				yes (24V)	Standard	R2AA06010FCH00M
		200W	60mm sq.	—	—	R2AA06020FXH00
				—	Standard	R2AA06020FXH00M
				yes (24V)	—	R2AA06020FCH00
				yes (24V)	Standard	R2AA06020FCH00M
			80mm sq.	—	—	R2AA08020FXH00
				—	Standard	R2AA08020FXH00M
				yes (24V)	—	R2AA08020FCH00
				yes (24V)	Standard	R2AA08020FCH00M
		400W	60mm sq.	—	—	R2AA06040FXH00
				—	Standard	R2AA06040FXH00M
			80mm sq.	—	—	R2AA08040FXH00
				—	Standard	R2AA08040FXH00M
				yes (24V)	—	R2AA08040FCH00
				yes (24V)	Standard	R2AA08040FCH00M
		750W	80mm sq.	—	—	R2AA08075FXH00
				—	Standard	R2AA08075FXH00M
				yes (24V)	—	R2AA08075FCH00
				yes (24V)	Standard	R2AA08075FCH00M
		1000W	86mm sq.	—	—	R2AAB8100FXH00
				—	Standard	R2AAB8100FXH00M
				yes (24V)	—	R2AAB8100FCH00
				yes (24V)	Standard	R2AAB8100FCH00M

For specifications on other model, please contact us.

Servo Amplifier Standard Model Number List

200V System

Type	Main Power	Control Power	Encoder Type	Selectable Output	Internal Registration Resistor	Amplifier Capacity	Model No.
Analog/Pulse input type	AC200V System AC200 to 230V (3-phase)	AC200V System AC200 to 230V (1-phase)	Wire-saving incremental encoder, Battery backup method absolute encoder	NPN	—	15A	RS1A01AA
						30A	RS1A03AA
					With	50A	RS1A05AA
						15A	RS1L01AA
						30A	RS1L03AA
					—	50A	RS1L05AA
				PNP	—	15A	RS1A01AB
						30A	RS1A03AB
					With	50A	RS1A05AB
						15A	RS1L01AB
						30A	RS1L03AB
					—	50A	RS1L05AB
			Full Closed	NPN	—	15A	RS1A01AT
						30A	RS1A03AT
					With	50A	RS1A05AT
						15A	RS1L01AT
						30A	RS1L03AT
					—	50A	RS1L05AT
CANopen Interface specifications	AC200V System	AC200V System	Wire-saving incremental encoder, Battery backup method absolute encoder	NPN	—	15A	RS1A01AL
						30A	RS1A03AL
					With	50A	RS1A05AL
		DC24V			—	15A	RS1J01AL
						30A	RS1J03AL
						50A	RS1J05AL
		AC200V System		PNP	—	15A	RS1A01AU
						30A	RS1A03AU
					With	50A	RS1A05AU
		DC24V			—	15A	RS1J01AU
						30A	RS1J03AU
						50A	RS1J05AU
Built-in positioning function model	AC200V System	AC200V System	Wire-saving incremental encoder, Battery backup method absolute encoder	NPN	—	15A	RS1A01AC
						30A	RS1A03AC
					With	50A	RS1A05AC
						15A	RS1L01AC
						30A	RS1L03AC
					—	50A	RS1L05AC

For specifications on other model, please contact us.

■ Multi-Axis Servo System Amplifier Unit

Type	Power Input	Encoder Type	Selectable Output	Amplifier Capacity	Model No.
Pulse train interface	DC280V	Battery backup method absolute encoder	NPN	15A	RR1A01AAB00
				30A	RR1A03AAB00

■ Multi-Axis Servo System Power Unit

Type	Power Input	Internal Registration Resistor	Model No.
Pulse train interface	AC200V	With	RRPAA00

■ Multi-Axis Servo System Motherboard

Power Input	Number of Slots (based on a 15A unit)	Model No.
AC200V	4	RRMA400
	6	RRMA600
	8	RRMA800

Servo Motor Standard Model Number List

100V System

Power Voltage	Encoder models	Rated Output	Motor Flange Size	Holding Brake	CE·UL	Model No.
100V	Battery backup method absolute encoder (PA035C)	30W	40mm sq.	yes(24V)	—	R2EA04003FCP00
				yes(24V)	Standard	R2EA04003FCP00M
				—	—	R2EA04003FXP00
				—	Standard	R2EA04003FXP00M
		50W	40mm sq.	yes(24V)	—	R2EA04005FCP00
				yes(24V)	Standard	R2EA04005FCP00M
				—	—	R2EA04005FXP00
				—	Standard	R2EA04005FXP00M
		80W	40mm sq.	yes(24V)	—	R2EA04008FCP00
				yes(24V)	Standard	R2EA04008FCP00M
				—	—	R2EA04008FXP00
				—	Standard	R2EA04008FXP00M
		100W	60mm sq.	yes(24V)	—	R2EA06010FCP00
				yes(24V)	Standard	R2EA06010FCP00M
				—	—	R2EA06010FXP00
				—	Standard	R2EA06010FXP00M
		200W	60mm sq.	yes(24V)	—	R2EA06020FCP00
				yes(24V)	Standard	R2EA06020FCP00M
				—	—	R2EA06020FXP00
				—	Standard	R2EA06020FXP00M
	Absolute encoder for incremental System (PA035S)	30W	40mm sq.	yes(24V)	—	R2EA04003FCH00
				yes(24V)	Standard	R2EA04003FCH00M
				—	—	R2EA04003FXH00
				—	Standard	R2EA04003FXH00M
		50W	40mm sq.	yes(24V)	—	R2EA04005FCH00
				yes(24V)	Standard	R2EA04005FCH00M
				—	—	R2EA04005FXH00
				—	Standard	R2EA04005FXH00M
		80W	40mm sq.	yes(24V)	—	R2EA04008FCH00
				yes(24V)	Standard	R2EA04008FCH00M
				—	—	R2EA04008FXH00
				—	Standard	R2EA04008FXH00M
		100W	60mm sq.	yes(24V)	—	R2EA06010FCH00
				yes(24V)	Standard	R2EA06010FCH00M
				—	—	R2EA06010FXH00
				—	Standard	R2EA06010FXH00M
		200W	60mm sq.	yes(24V)	—	R2EA06020FCH00
				yes(24V)	Standard	R2EA06020FCH00M
				—	—	R2EA06020FXH00
				—	Standard	R2EA06020FXH00M

For specifications on other model, please contact us.

Servo Amplifier Standard Model Number List

100V System

Type	Main Power	Control Power	Encoder Type	Selectable Output	Internal Registration Resistor	Amplifier Capacity	Model No.
Analog/Pulse input type	AC100V System	AC100V System	Wire-saving incremental encoder, Battery backup method absolute encoder	NPN	With	15A	RS1N01AA
						30A	RS1N03AA
					—	15A	RS1E01AA
						30A	RS1E03AA
				PNP	With	15A	RS1N01AB
						30A	RS1N03AB
					—	15A	RS1E01AB
						30A	RS1E03AB
			Full Closed	NPN	With	15A	RS1N01AT
						30A	RS1N03AT
					—	15A	RS1E01AT
						30A	RS1E03AT
CANopen Interface specifications	AC100V System	AC100V System	Wire-saving incremental encoder, Battery backup method absolute encoder	NPN	With	15A	RS1N01AC
						30A	RS1N03AC
					—	15A	RS1E01AC
						30A	RS1E03AC

For specifications on other model, please contact us.

■ Multi-Axis Servo System Amplifier Unit

Type	Power Input	Encoder Type	Selectable Output	Amplifier Capacity	Model No.
Pulse train interface	DC140V	Battery backup method absolute encoder	NPN	15A	RR1E01AAB00
				30A	RR1E03AAB00

■ Multi-Axis Servo System Power Unit

Type	Power Input	Internal Registration Resistor	Model No.
Pulse train interface	AC100V	With	RRPEA00

■ Multi-Axis Servo System Motherboard

Power Input	Number of Slots (based on a 15A unit)	Model No.
AC100V	4	RRME400
	6	RRME600
	8	RRME800

Servo Motor Model Number Nomenclature

Servo Motor

Example: The following model number defines a "R2" servomotor with 60mm flange size, 200W rated output, 6000min^{-1} maximum rotation speed, 24V brake, and an absolute encoder (131,072 divisions/rotation),UL/CE approval and reduction ratio 1/3.(Planetary gear)

R | 2 | AA | 06 | 020 | F | C | P | 00 | M | A

R Series

Motor Type
····Middle inertia

Supply Voltage
AA··200V Motor
EA··100V Motor

Flange Size
04 ····· 40mm
06 ····· 60mm
08 ····· 80mm
B8 ····· 86mm

Rated Output

003 ·····	30W	040 ·····	400W
005 ·····	50W	075 ·····	750W
010 ·····	100W	100 ·····	1kW
020 ·····	200W		

A reduction in the rating might be needed if an oil seal and Brake is attached. Please consult with us about the details.

Maximum Rotation Speed
····6000min^{-1}

Holding Brake
X····Without Brake
B····With Brake(90V DC)
C····With Brake(24V DC)

Encoder Type
P ··Battery backup method absolute encoder [PA035C]
H ··Absolute encoder for incremental System [PA035S]
W··Absolute encoder without battery [RA035C]
S ··Wire-saving incremental encoder [PP031T]

Specification
00··Standard
01··With oil seal

Standard Identification
M ····CE and UL
0 ····Without standard but with gear

Symbol	Reducer type	Reduction ratio
A	Planetary gear	1/3
B		1/5
C		1/9
D		1/15
E		1/25
S	Backlashless planetary gear	1/5
T		1/11
U		1/21
V		1/33

Please consult with us about the combination for the decelerator.

Encoder Specification

Model	Partition number/ rotation	Multiple Rotations	Remarks
PA035C	131072(17bit)	65536(16bit)	Battery backup method Absolute encoder
PA035S	131072(17bit)	—	Absolute encoder for Incremental system
RA035C	131072(17bit)	65536(16bit)	Absolute encoder without battery
PP031T	8000(2000P/R)	—	Wire-saving incremental encoder Maximum 40000(Partition number/ rotation)

Conformance to Overseas Standards

Our standard servo amplifier has attained the international standards (UL, c-UL and EN Standards).
You can also employ servo motors that have attained the international standards (UL, c-UL and EN Standards).

Single-Axis Servo Amplifier (Analog/Pulse input type)

Example: The model number shown below is "R" Series Servo Amplifier with 200V AC input voltage and 15A amplifier capacity.

RS1 **A** **01** **A** **A**

R Series Single-Axis Servo Amplifier

Amp. capacity
01 ····· 15A
03 ····· 30A
05 ····· 50A

Motor Type
····· Rotary Motor

Power Input, Internal Registration Setting

Model	Input Voltage	Internal Registration Resistor	Amp. capacity
L	AC200V	W	15A,30A
A		W/O	15A,30A
A		W	50A
L		W/O	50A
N	AC100V	W	15A,30A
E		W/O	15A,30A

Control Hardware Type

A··· Encoder Specification : Absolute encoder
Wire-saving incremental encoder
Selectable output : NPN Output

B··· Encoder Specification : Absolute encoder
Wire-saving incremental encoder
Selectable output : PNP Output

T··· Full Closed-Loop
Specification : Wire-saving incremental encoder
Incremental encoder for full close
Selectable output : NPN Output

*The motor parameters need to be set for the amplifier for use. Use the setup software.

Servo Amplifier with CANopen

Example: The model number shown below is "R" Series Servo Amplifier with 200V AC input voltage (Main Power and Control Power) and 15A amplifier capacity.

RS1 **A** **01** **A** **L**

R Series Single-Axis Servo Amplifier

AMP. Capacity
01····· 15A
03····· 30A
05····· 50A

Motor Type
····· Rotary Motor

Interface Type
Interface Specification : CAN open I/F
Encoder Specification : Absolute encoder, Wire-saving incremental encoder
L····NPN Output
U····PNP Output

Power Input, Internal Registration Setting

Model	Control Power Input Voltage	Power Input, Input Voltage	Internal Registration Resistor	AMP. Capacity
L	AC200V	AC200V	W	15A,30A
A			W/O	15A,30A
A			W	50A
L			W/O	50A
N	AC100V	AC100V	W	15A,30A
E			W/O	15A,30A
K	DC24V	AC200V	W	15A,30A,50A
J			W/O	15A,30A,50A

*The motor parameters need to be set for the amplifier for use. Use the setup software.

Single-Axis Servo Amplifier built-in Positioning Function model

Example: The model number shown below is "R" Series Servo Amplifier with 200V AC input voltage (Main Power and Control Power) and 15A amplifier capacity.

RS1 **A** **01** **A** **C**

R Series Single-Axis Servo Amplifier

Amp. capacity
01····· 15A
03····· 30A
05····· 50A

Motor Type
·····Rotary Motor

Interface Type
C····Built-in Positioning Function Model
F····Built-in positioning function model with serial interface

Power Input, Internal Registration Setting

Model	Input Voltage	Internal Registration Resistor	Amp. capacity
L	AC200V	W	15A,30A
A		W/O	15A,30A
A		W	50A
L		W/O	50A
N	AC100V	W	15A,30A
E		W/O	15A,30A

*The motor parameters need to be set for the amplifier for use. Use the setup software.

Multi-Axis Servo Amplifier

Example: The model number shown below is a 4-axis "R" series multiaxis servo amplifier configuration with 200V AC input voltage, 4 units of 15A amplifiers, and pulse train interface.

Amplifier Unit	RR1A01AAB00 × 4 units
Power Unit	RRPAA00 × 1 unit
Motherboard	RRMA400 × 1 unit

Amplifier Unit

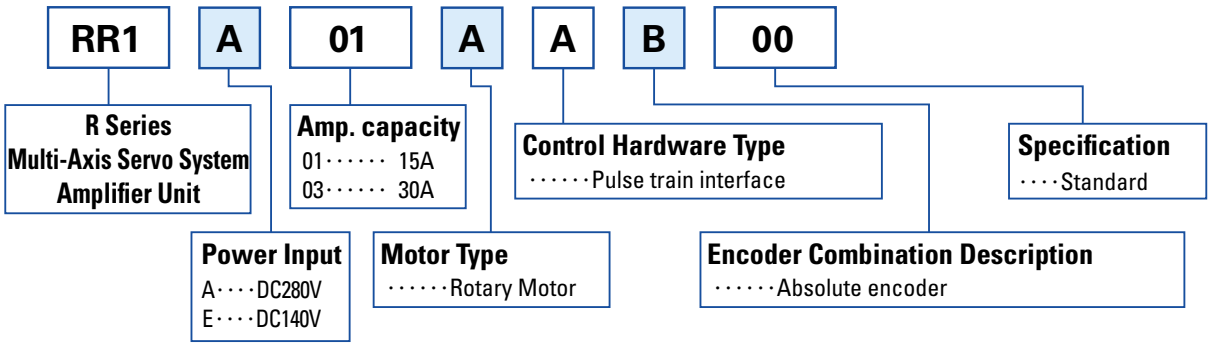

*The motor parameters need to be set for the amplifier for use. Use the setup software.

Power Unit

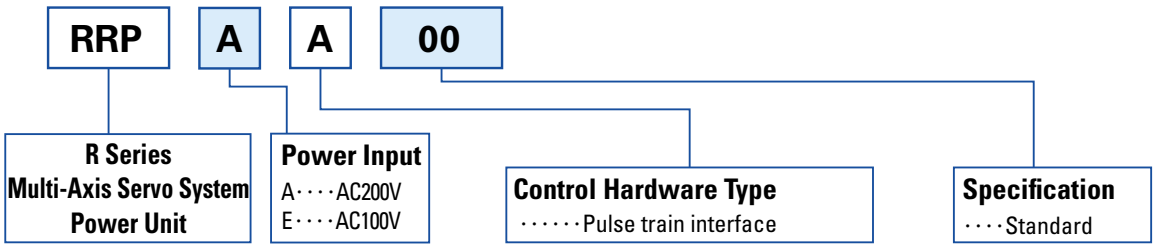

Motherboard

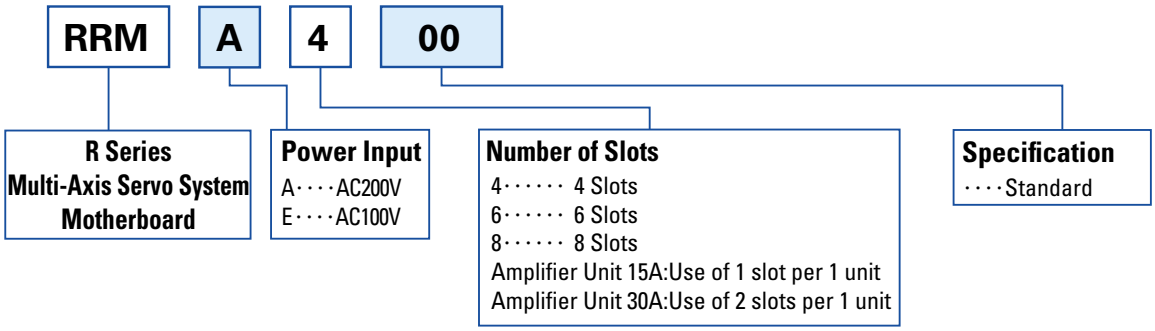

Single-Axis Servo Amplifier

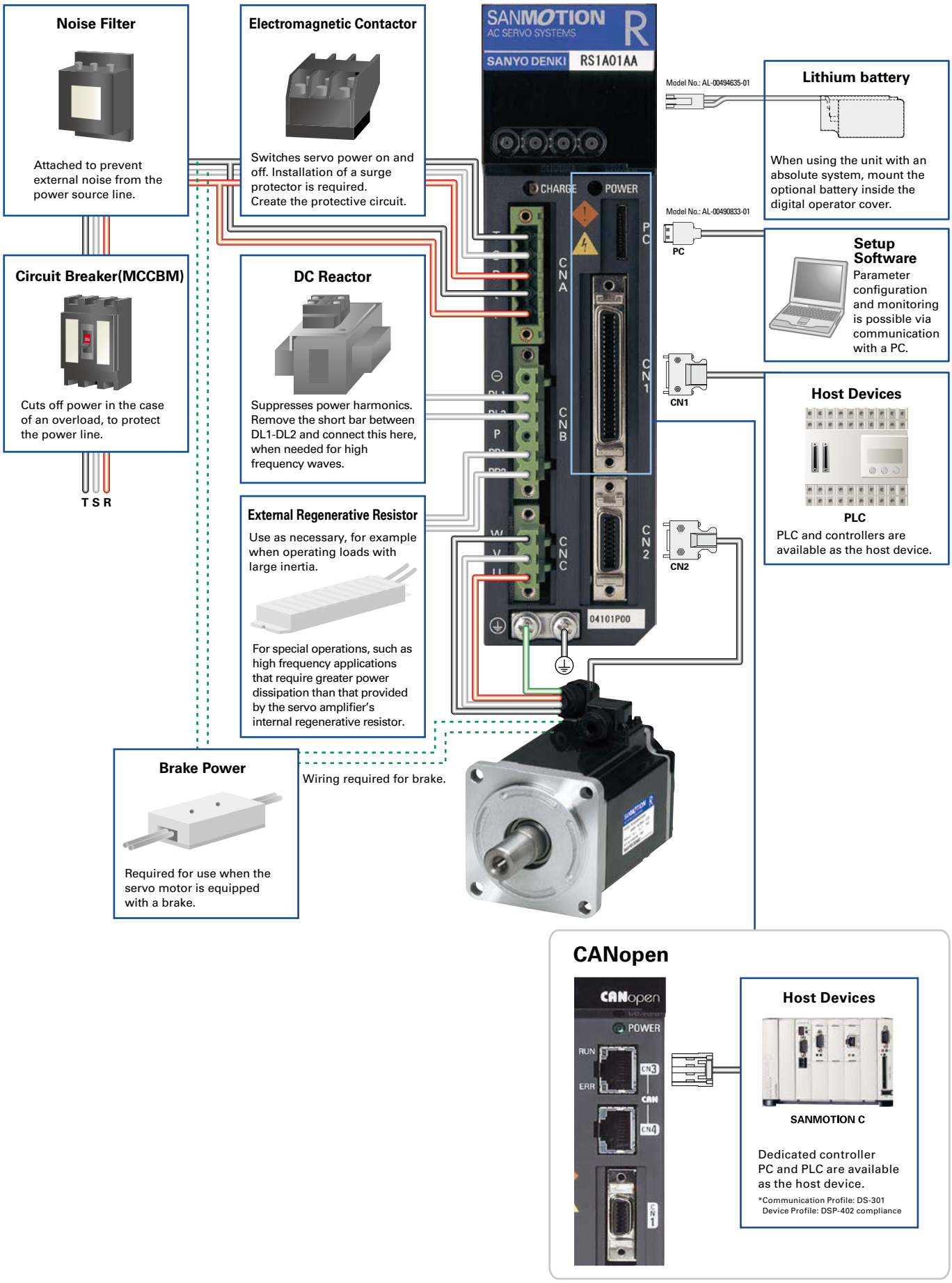

Multi-Axis Servo Amplifier

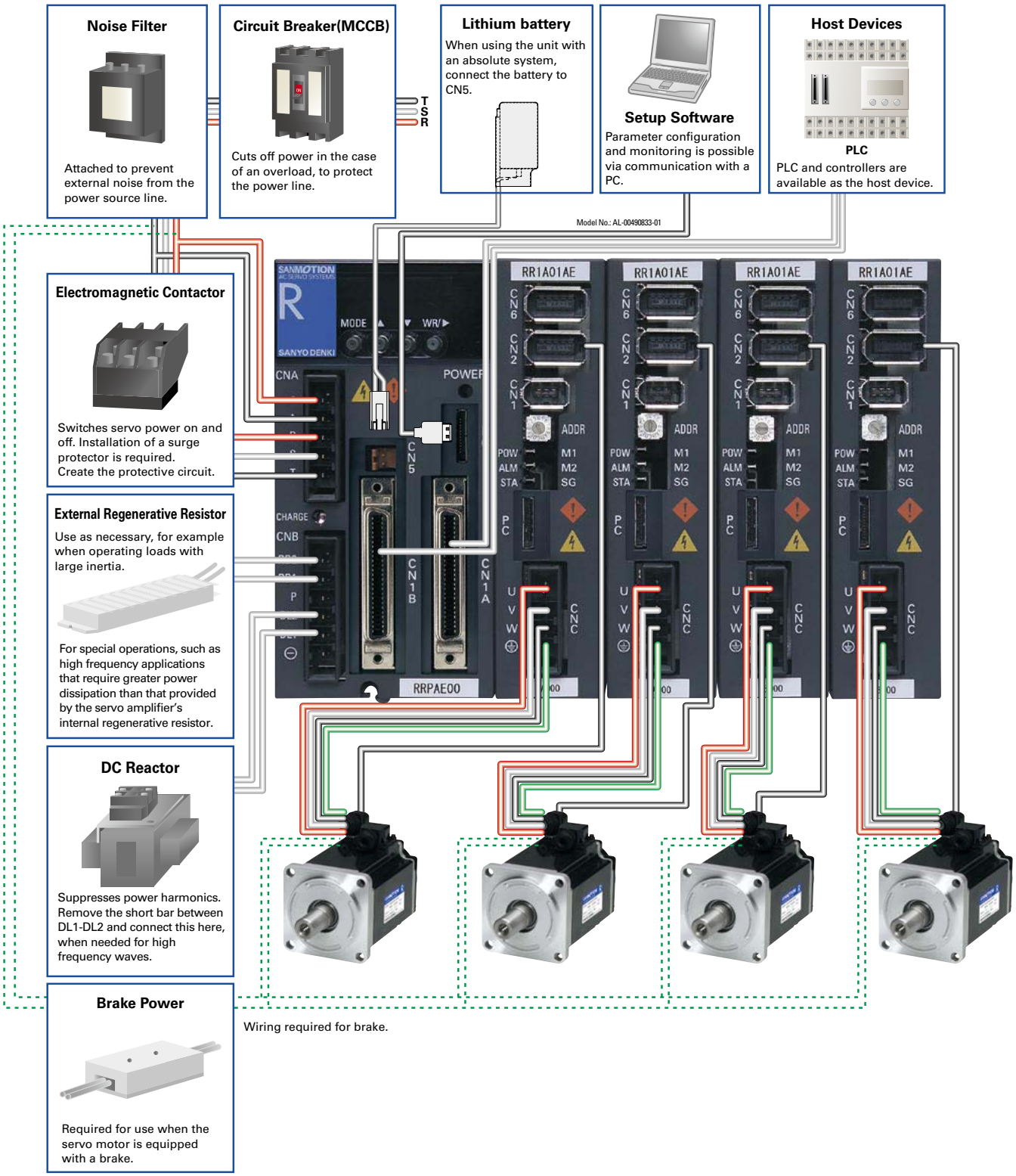

Standard Specifications

R2

Servo Motor

200V System

Capacity

40mm sq. to 86mm sq.
30W to 1000W

Features

High Efficiency and Low Ripple (Medium Inertia)

Motor Dwgs P24

★:Indicates a typical value after warm-up and thermal stabilization, together with a standard amplifier.

☆:Indicates a typical value when the winding temperature is 20℃.

Motor Model and Flange Size in mm	Status	Symbol	Unit	R2AA04003F 《40》	R2AA04005F 《40》	R2AA04010F 《40》
Rated Output	★	P_R	W	30	50	100
Rated Speed	★	N_R	min^{-1}	3000		
Maximum Speed	★	N_{max}	min^{-1}	6000		
Rated Torque	★	T_R	N·m	0.098	0.159	0.318
Continuous Torque at Stall	★	T_S	N·m	0.108	0.167	0.318
Peak Torque at Stall	★	T_P	N·m	0.37	0.59	1.18
Rated Armature Current	★	I_R	Arms	0.51	0.67	0.81
Armature Current at Stall	★	I_S	Arms	0.56	0.69	0.81
Peak Armature Current at Stall	★	I_P	Arms	2.15	2.8	3.3
Torque Constant	☆	K_T	N·m／Arms	0.201	0.246	0.424
Voltage Constant Per Phase	☆	$K_{E\phi}$	mV／min^{-1}	7	8.6	14.8
Phase Resistance	☆	R_ϕ	Ω	12	9	9.3
Rated Power Rate	★	Q_R	kW／s	3.9	6.7	16
Electrical Time Constant	☆	te	ms	0.55	0.67	0.82
Mechanical Time Constant (Not including Encoder)	☆	tm	ms	2.2	1.7	0.97
Rotor Moment of Inertia (Not including Encoder)		J_M	$\times10^{-4}$ kg·m²(GD²／4)	0.0247	0.0376	0.0627
Rotor Moment of Inertia (Encoder)		J_S	$\times10^{-4}$ kg·m²(GD²／4)	0.0033 (Note 3)		
Mass including Encoder		WE	kg	0.23	0.27	0.39
Brake Static Friction Torque		TB	N·m	0.32 MIN.		
Brake Rated Voltage		VB	V	DC90V ／ DC24V ± 10%		
Brake Rated Current		IB	A	0.07 ／ 0.27		
Rotor Moment of Inertia (Brake)		JB	$\times10^{-4}$ kg·m²(GD²／4)	0.0078		
Brake Mass		W	kg	0.23		
Motor Operating Temp, Rel. Humidity				Operating Temperature: 0 to 40°C, Relative Humidity: 90% Maximum, no condensation		
Amplifier Model (Single-Axis)				**RS1A01A□**		
Amplifier Model (Multi-Axis)				**RR1A01AAB00**		
Amplifier Power Supply				AC200V to 230V +10, −15% 50/60Hz ± 3Hz (Note 2)		
Amp. Operating Temp. and RH				Operating Temperature: 0 to 55°C (Note1), Relative Humidity: 90% Maximum, no condensation		
Power Consumption			kVA	0.2		0.4
Amplifier Mass (Weight)[Single / CAN / Multi] (Note4)			kg	0.9 ／ 1.0 ／ 0.48		

Note 1) The multi-axis type Servo amplifier has an ambient operating temperature of 0 to 40℃. The operating temperature with forced air cooling is 0 to 55℃.
Note 2) In case of the amplifier for CANopen, there is also control power source DC24V type.
Note 3) This is a instance with the battery-backup method absolute encoder (PA035).
For the following encoders, please make inquiries:
·Absolute encoder without battery [RA035C]
·Red. Wiring Incremental Encoder [PP031T]
Note 4) The weight in the multi-axial specifications is of amplifier unit only.
* For models with oil seal or brake, reduction in rated value may become necessary.

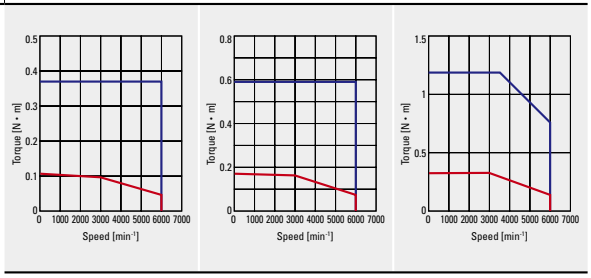

Encoder Wiring Diagram

Single-Axis Servo Amplifier

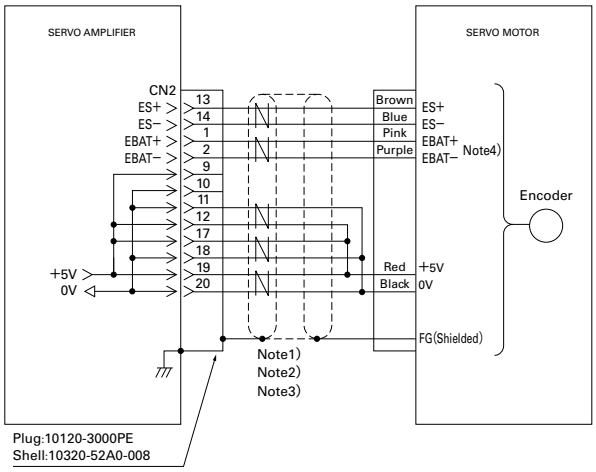

Battery backup type absolute encoder [PA035C]
Absolute encoder for incremental system [PA035S]
Absolute encoder without battery [RA035C]

Note 1) Use a twisted-pair shielded cable.

Note 2) Encoder power connections depend on encoder cable length. See the following

Encoder cable length	10m MAX.	25m MAX.	40m MAX.
+5V DC Wiring	Connect pin 19 (Do not connect pins12,17)	Connect pin 17,19 (Do not connect pins12)	Connect pin 12,17,19
0V DC Wiring	Connect pin 20 (Do not connect pins11,18)	Connect pin 18,20 (Do not connect pins11)	Connect pin 11,18,20

Note 3) Use a Awg24 0.2mm² encoder cable

Note 4) When the Absolute encoder for incremental system or absolute encoder without battery is used, battery lines (EBAT+, EBAT-) are not required.

·Multi-Axis Servo Amplifier Wiring diagram → page17

R2AA06010F 《60》	R2AA06020F 《60》	R2AA06040F 《60》	R2AA08020F 《80》	R2AA08040F 《80》	R2AA08075F 《80》	R2AAB8100F 《86》
100	200	400	200	400	750	1000
3000						
6000						
0.318	0.637	1.27	0.637	1.27	2.39	3.18
0.353	0.686	1.37	0.686	1.37	2.55	3.92
1.13	2.2	4.8	2.2	4.4	8.5	14.3
0.86	1.5	2.8	1.5	2.6	4.6	6.0
0.86	1.6	2.8	1.5	2.6	4.6	6.8
3.5	5.6	10.8	4.8	8.9	15.5	25.7
0.375	0.476	0.524	0.516	0.559	0.559	0.582
13.1	16.6	18.3	18.0	19.5	19.5	20.3
4.8	2.7	1.36	2.3	0.93	0.4	0.44
8.6	19	39	8	16	31	42
2.0	2.6	3.2	2.2	2.5	3.0	4.3
1.2	0.78	0.61	1.3	0.93	0.70	0.93
0.117	0.219	0.412	0.52	1.04	1.82	2.38
0.0033 (Note 3)						
0.59	0.84	1.3	1.2	1.6	2.6	3.5
0.36 MIN.	1.37 MIN.		2.55 MIN.			3.92 MIN.
DC90V ／ DC24V ± 10%						
0.07 ／ 0.27	0.11 ／ 0.32		0.12 ／ 0.37			0.30 ／ 0.09
0.060	0.060		0.25			0.34
0.30	0.35		0.85			0.8
Operating Temperature: 0 to 40˚C, Relative Humidity: 90% Maximum, no condensation						
RS1A01A□		RS1A03A□	RS1A01A□	RS1A03A□		RS1A05A□
RR1A01AAB00		RR1A03AAB00	RR1A01AAB00	RR1A03AAB00		—
AC200V to 230V +10, −15% 50/60Hz ± 3Hz (Note 2)						
Operating Temperature: 0 to 55˚C (Note), Relative Humidity: 90% Maximum, no condensation						
0.4	0.8	1.0	0.8	1.0	1.7	2.5
0.9 ／ 1.0 ／ 0.48		1.0 ／ 1.1 ／ 0.77	0.9 ／ 1.0 ／ 0.48	1.0 ／ 1.1 ／ 0.77		2.2 ／ 2.3 ／ –
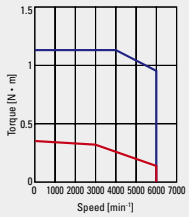	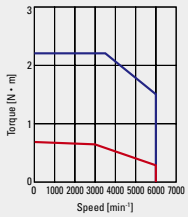	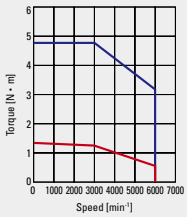	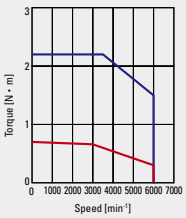	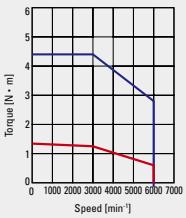	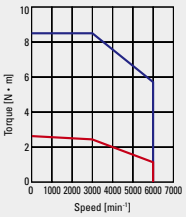	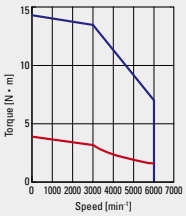

Single-Axis Servo Amplifier

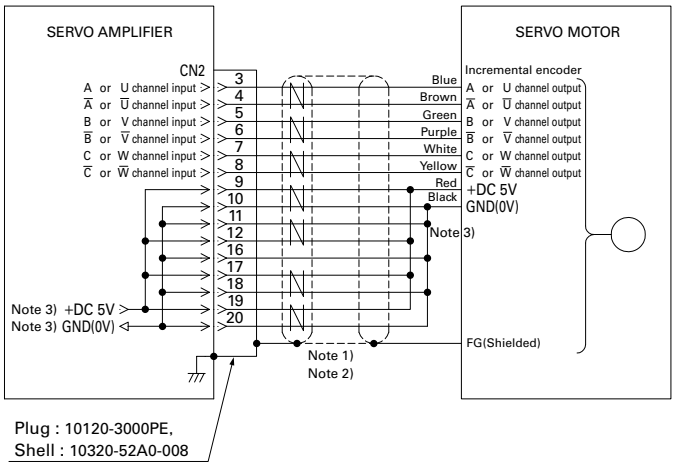

Red. Wiring incremental encoder [PP031T]

Note 1) Use a twisted-pair shielded cable.

Note 2) Encoder power connections depend on encoder cable length. See the following

Encoder cable length	5m MAX.	10m MAX.	20m MAX.	30m MAX.
+5V DC Wiring	Connect pin 19 (Do not connect pins 9,12,17)	Connect pin 17,19 (Do not connect pins 9,12)	Connect pin 12,17,19 (Do not connect pins 9)	9,12,17,19 Connect pin
0V DC Wiring	Connect pin 20 (Do not connect pins10,11,16,18)	Connect pin 18,20 (Do not connect pins 10,11,16)	Connect pin 11,18,20 (Do not connect pins 10,16)	10,11,16,18,20Connect pin

Note 3) Use a Awg24 0.2mm² encoder cable

Standard Specifications

R2

Servo Motor

100V System

Capacity

40mm sq. to 60mm sq.
30W to 200W
(5 models)

Features

High Efficiency and Low Ripple (Medium Inertia)

Motor Dwgs P24

★:Indicates a typical value after warm-up and thermal stabilization, together with a standard amplifier.

☆:Indicates a typical value when the winding temperature is 20℃.

Motor Model and Flange Size in mm	Status	Symbol	Unit	R2EA04003F 《40》	R2EA04005F 《40》
Rated Output	★	P_R	W	30	50
Rated Speed	★	N_R	min^{-1}	3000	
Maximum Speed	★	N_{max}	min^{-1}	6000	
Rated Torque	★	T_R	N·m	0.098	0.159
Continuous Torque at Stall	★	T_S	N·m	0.108	0.167
Peak Torque at Stall	★	T_P	N·m	0.37	0.59
Rated Armature Current	★	I_R	Arms	0.94	1.2
Armature Current at Stall	★	I_S	Arms	1.0	1.3
Peak Armature Current at Stall	★	I_P	Arms	3.7	4.9
Torque Constant	☆	K_T	N·m／Arms	0.116 ± 10%	0.142 ± 10%
Voltage Constant Per Phase	☆	$K_{E\phi}$	mV／min^{-1}	4.04 ± 10%	4.97 ± 10%
Phase Resistance	☆	R_ϕ	Ω	4	3
Rated Power Rate	★	Q_R	kW／s	3.9	6.7
Electrical Time Constant	☆	te	ms	0.55	0.67
Mechanical Time Constant (Not including Encoder)	☆	tm	ms	2.2	1.7
Rotor Moment of Inertia (Not including Encoder)		J_M	$\times10^{-4}$kg·m²(GD²／4)	0.0247	0.0376
Rotor Moment of Inertia (Encoder)		J_S	$\times10^{-4}$kg·m²(GD²／4)	0.0033 (Note 2)	
Mass including Encoder		WE	kg	0.23	0.27
Brake Static Friction Torque		TB	N·m	0.32 MIN.	
Brake Rated Voltage		VB	V	DC90V ／ DC24V ± 10%	
Brake Rated Current		IB	A	0.07 ／ 0.27	
Rotor Moment of Inertia (Brake)		JB	$\times10^{-4}$kg·m²(GD²／4)	0.0078	
Brake Mass		W	kg	0.23	
Motor Operating Temp, Rel. Humidity				Operating Temperature: 0 to 40°C, Relative Humidity: 90% Maximum, no condensation	
Amplifier Model (Single-Axis)				**RS1E01A□**	
Amplifier Model (Multi-Axis)				**RR1E01AAB**	
Amplifier Power Supply				AC100V to 115V ＋ 10, － 15% 50/60Hz ± 3Hz	
Amp. Operating Temp. and RH				Operating Temperature: 0 to 55°C (Note1), Relative Humidity: 90% Maximum, no condensation	
Power Consumption			kVA	0.2	
Amplifier Mass (Weight) [Single / Multi]			kg	0.9 ／ 0.48	

Note 1) The multi-axis type Servo amplifier has an ambient operating temperature of 0 to 40℃. The operating temperature with forced air cooling is 0 to 55℃.
Note 2) This is a instance with the battery-backup method absolute encoder (PA035).
For the following encoders, please make inquiries:
·Absolute encoder without battery [RA035C]
·Red. Wiring Incremental Encoder [PP031T]
Note 3) The weight in the multi-axial specifications is of amplifier unit only.
* For models with oil seal or brake, reduction in rated value may become necessary.

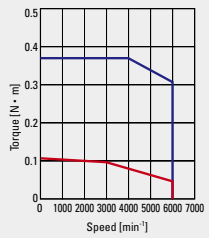

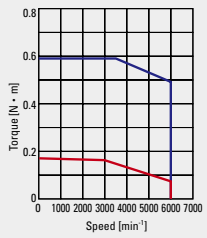

Encoder Wiring Diagram

Multi-Axis Servo Amplifier

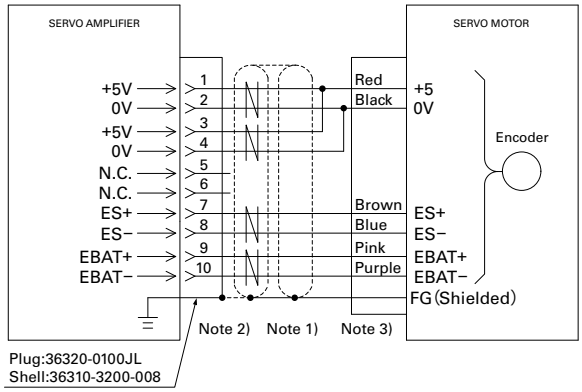

Battery backup type absolute encoder [PA035C]

Note 1) Use a twisted-pair shielded cable.

Note 2) The sheathed shield wire should be connected to the metal case (ground) on CN2 side, before connecting to ground on encoder side.

Note 3) Color symbols shown on the diagram for signal lines on encoder side refer to lead-wire type sensors.

Note 4) The allowable connection distance between amplifier and encoder varies according to the diameter(impedence) of the electric wire of the cable used. The power voltage specification for encoders is 5V±5%. If the cable is too long, the voltage on encoder side may fall below 5V. Measure the voltage on encoder side to ensure that the cable used is within specification limits.

For the following encoders, please make inquiries:
·Absolute encoder without battery [RA035C]

R2EA04008F 《40》	R2EA06010F 《60》	R2EA06020F 《60》	Unit
80	100	200	W
3000			min^{-1}
6000			min^{-1}
0.255	0.318	0.637	N·m
0.255	0.318	0.686	N·m
0.86	1.0	2.2	N·m
1.3	1.7	3.1	Arms
1.3	1.7	3.2	Arms
4.5	5.6	11.9	Arms
0.221 ± 10%	0.206 ± 10%	0.224 ± 10%	N·m／Arms
7.7 ± 10%	7.2 ± 10%	7.82 ± 10%	mV／min^{-1}
2.9	1.5	0.6	Ω
10	8.6	19	kW／s
0.81	1.9	2.6	ms
0.98	1.2	0.79	ms
0.0627	0.117	0.219	$\times10^{-4}$ kg·m²(GD²／4)
0.0033 (Note 2)			$\times10^{-4}$ kg·m²(GD²／4)
0.39	0.59	0.84	kg
0.32 MIN.	0.36 MIN.	1.37 MIN.	N·m
DC90V ／ DC24V ± 10%			V
0.07 ／ 0.27	0.07 ／ 0.27	0.11 ／ 0.32	A
0.0078	0.06		$\times10^{-4}$ kg·m²(GD²／4)
0.23	0.3	0.35	kg
Operating Temperature: 0 to 40° C, Relative Humidity: 90% Maximum, no condensation			
RS1A01A□		**RS1E03A□**	
RR1E01AAB		**RR1E03AAB**	
AC100V to 115V +10, −15% 50/60Hz ± 3Hz			
Operating Temperature: 0 to 55° C (Note1), Relative Humidity: 90% Maximum, no condensation			
0.4	0.5	0.8	kVA
0.9 ／ 0.48		1.0 ／ 0.77	kg
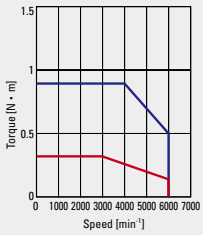	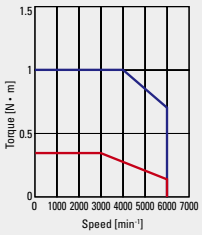	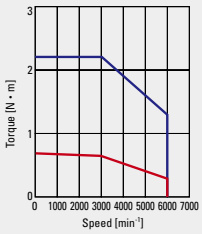	

CANopen Interface specifications

Fieldbus specifications	Bus Connection, Medium	CAN-Standard ISO-11898 (High-speed CAN)	
	Fieldbus	CANopen	
	Communication Profile	CiA DS301 Version 4.02	
	Device Profile	CiA DSP402 (CANopen device profile for drive and motion control) Version 2.0	
	Bit Rate	1Mbps, 800kbps, 500kbps(default setting), 250kbps, 125kbps, 50kbps , 20kbps , 10kbps (Selectable by R-Setup Software)	
	Max. nodes per segment	1 to 127 (Selectable by Double 16-position Rotary Switch or R-Setup Software)	
	Connector	RJ-45 type Modular connector (2 ports) - Pin 1 "CAN_H" high bus line - Pin 2 "CAN_L" low bus line - Pin 3,7 "CAN_GND" Ground - Pin 6 "CAN_SHIELD" Cable Shield - Pin 5 "Terminator" (120 ohm; if necessary, attach a jumper between Pin1 and Pin5)	
	Transceiver	ISO-11898 compliant high-speed transceiver	
	Max. Bus Length	25m (for 1Mbps)	
	Communication Objects	SDO (Service Data Object) EMCY (Emergency) SYNC (Synchronization Object)	PDO (Process Data Object) NMT (Network Management) Heartbeat
	PDO Transfer Modes	Synchronous transmission	Asynchronous transmission
	Mode of Operation	Homing Mode (h.m) Profile Velocity Mode (p.v) Profile Torque Mode (t.q)	Profile Position Mode (p.p) Interpolated Position Mode (i.p)

PNP output

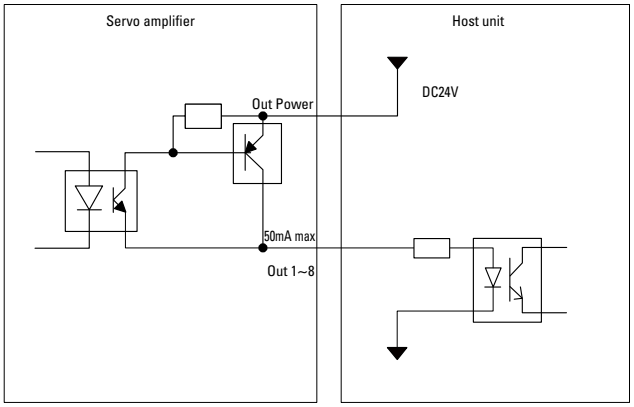

The output port counts are differentdepending on the specification.

NPN output

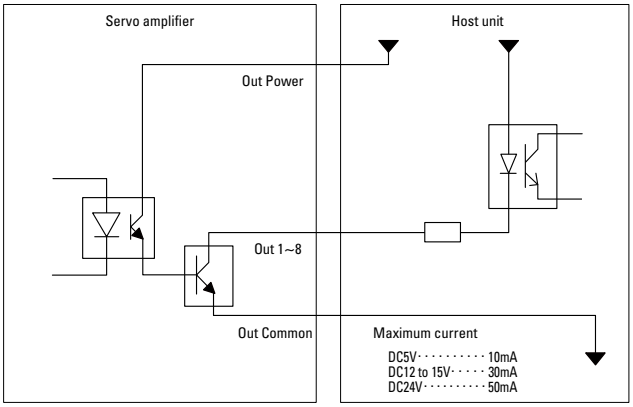

The output port counts are different depending on the specification.

Single-Axis Servo Amplifier

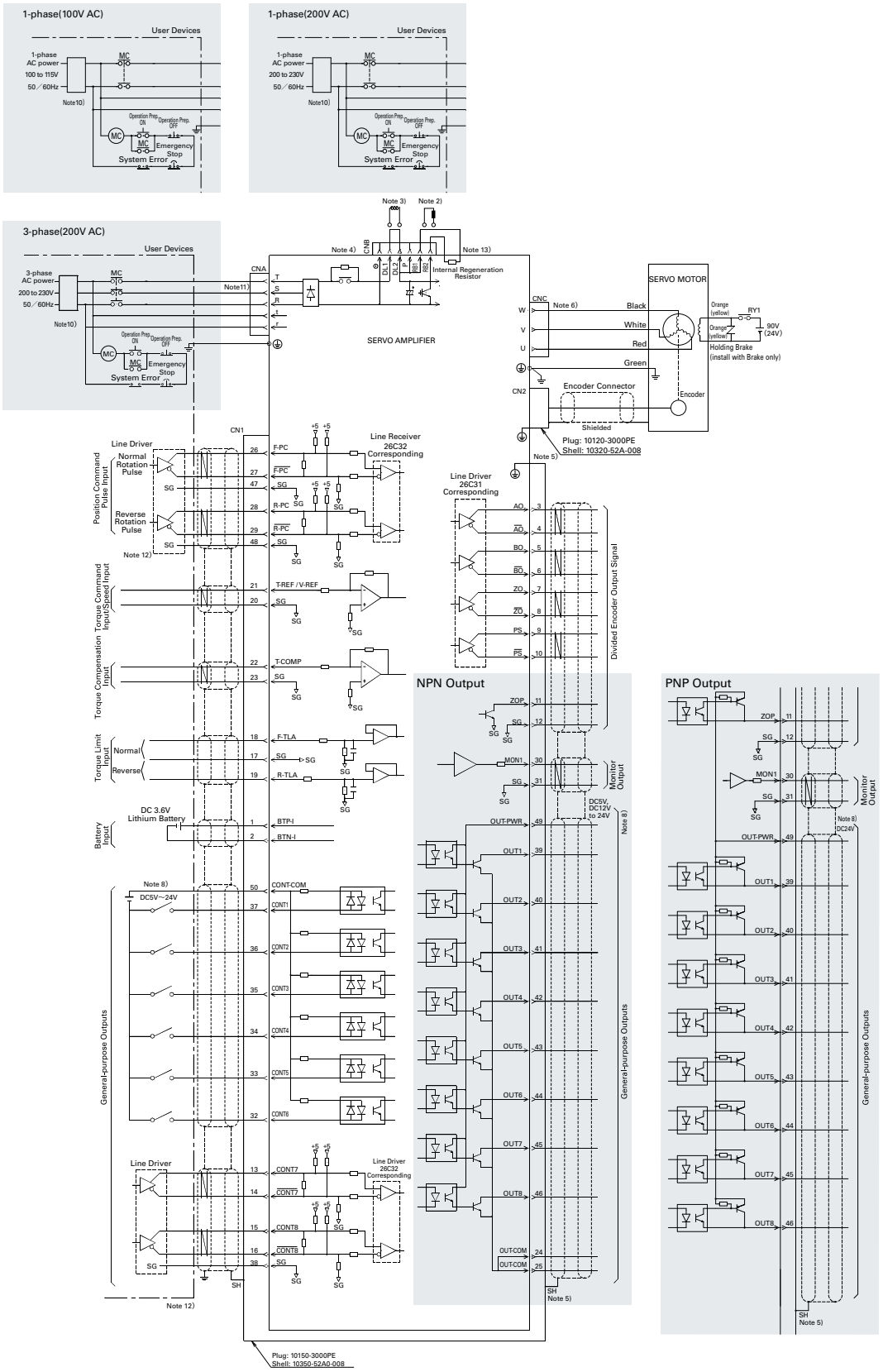

Note 1) For the parts markde , use a shielded cable.

Note 2) Connect a regenerative resistor between terminals RB1 - RB2.When using an external regenerative resistor,first remove the internal regenerative resistor wiring between terminals RB1 and RB2, and then connect an external regenerative resistor between terminals RB1 - RB2.

Note 3) Terminals DL1 and DL2 are dedicated for connecting DC reactors. If a harmonic suppression reactor is not in use, create a short circuit between DL1 and DL2 terminals with the attached shorting bar.

Note 4) The ⊖ and P terminals (high-voltage circuit) are reserved for maintenance. Do not wire these terminals.

Note 5) Refer to the Instruction Manual for instructions on the shielding process.

Note 6) Motor connection specifics may vary depending on the motor specifications. Lead-type motor power and brake wires are shown as red, white, black, green, and orange. When using a cannon plug, cannect it according to the motor specifications.

Note 7) For wiriting of the encoder connectors, refer to the encoder wiring diagram.

Note 8) The user must supply the external power supply.

Note 9) R, S, T, r, t, ⊖, P, DL2, RB1, RB2, U, V, W are high-voltage circuits; all other signal lines are low-voltage circuits. When wiring, maintain sufficient distance between high-voltage and low-voltage circuits.

Note 10) Installation of a UL compliant and IEC / EN compliant earth leakage circuit braker is recommended.

Note 11) When wiring the single-phase power supply, do not wire the S-phase to the amplifier.

Note 12) Always connect the SG (signal ground) between devices when using differential operation input signals.

Single-Axis Servo Amplifier with CANopen

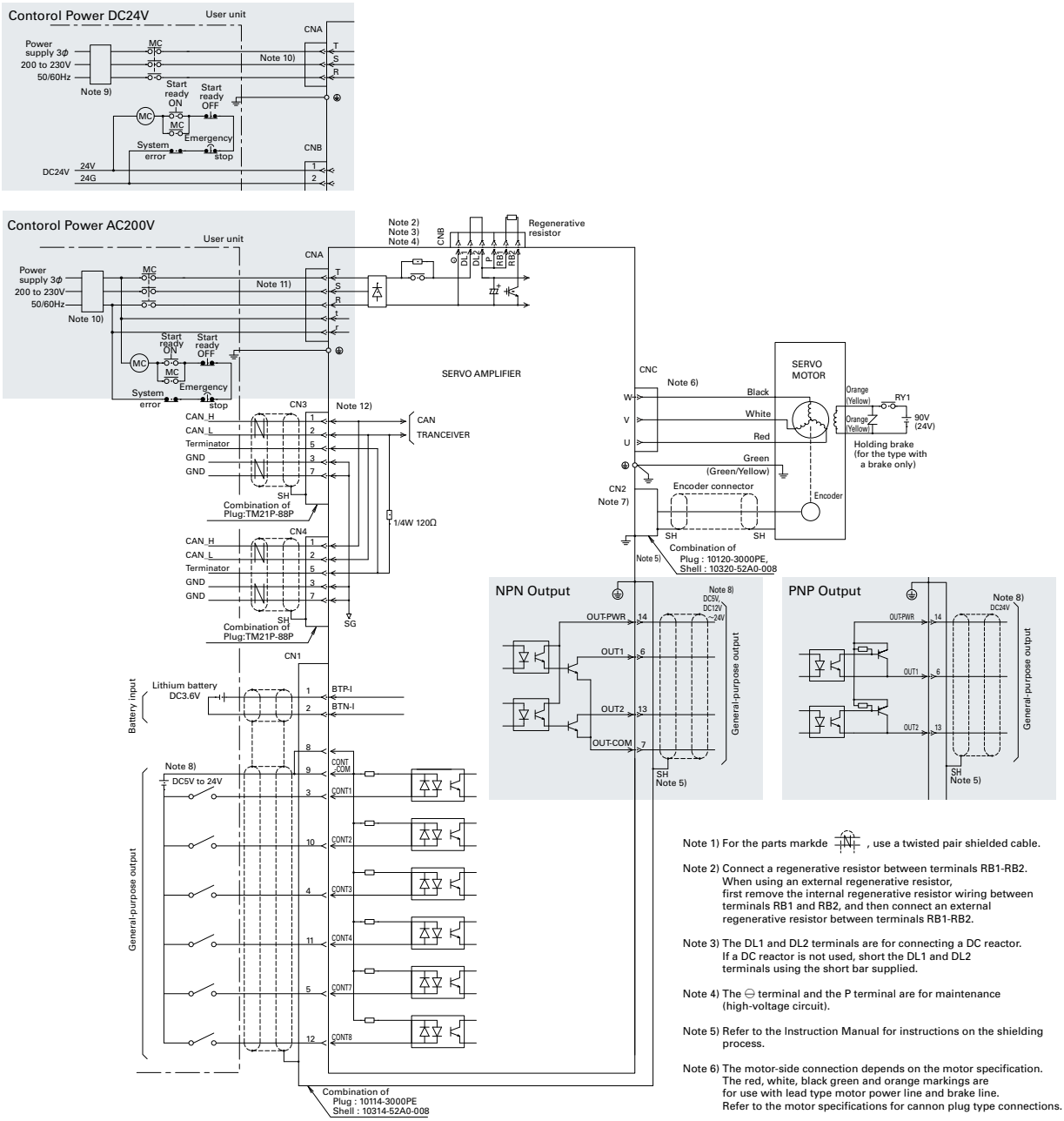

Note 1) For the parts markde , use a twisted pair shielded cable.

Note 2) Connect a regenerative resistor between terminals RB1-RB2. When using an external regenerative resistor, first remove the internal regenerative resistor wiring between terminals RB1 and RB2, and then connect an external regenerative resistor between terminals RB1-RB2.

Note 3) The DL1 and DL2 terminals are for connecting a DC reactor. If a DC reactor is not used, short the DL1 and DL2 terminals using the short bar supplied.

Note 4) The ⊖ terminal and the P terminal are for maintenance (high-voltage circuit).

Note 5) Refer to the Instruction Manual for instructions on the shielding process.

Note 6) The motor-side connection depends on the motor specification. The red, white, black green and orange markings are for use with lead type motor power line and brake line. Refer to the motor specifications for cannon plug type connections.

Note 7) Refer to the encoder connection diagram regarding the encoder connector wiring.

Note 8) Power should be supplied by the user. Either of the inputs can be selected.

Note 9) R,S,T,t,r,⊖,P,DL1,DL2,RB1,RB2,U,V,W are high-voltage circuits, all other lines are low-voltage. Ensure sufficient distance between the high- and low-voltage circuits.

Note 10) It is recommended to use a ground fault interrupter conforming to the UL, IEC and EN standards.

Note 11) Do not wire the S phase for a single-phase power amplifier.

Note 12) Insert RJ45 connector to which 1pin(CAN_H) and 5pin(Terminator) are short-circuited in CN3 or CN4 when the terminator is necessary.

Single-Axis Servo Amplifier built-in positioning function model

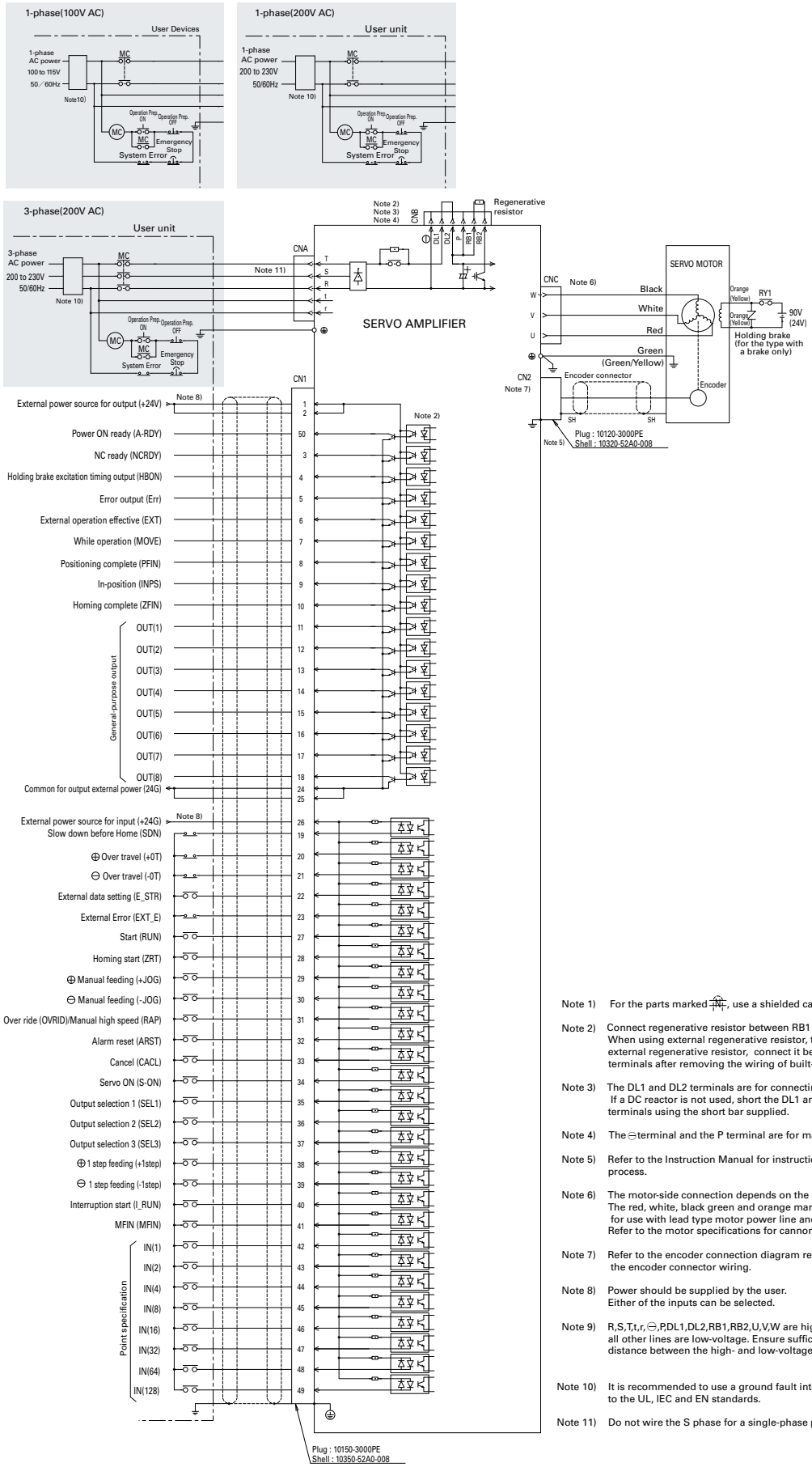

Note 1) For the parts marked ⏚, use a shielded cable.

Note 2) Connect regenerative resistor between RB1 and RB2 terminals. When using external regenerative resistor, terminals. When using external regenerative resistor, connect it between RB1 and RB2 terminals after removing the wiring of built-in regenerative resistor.

Note 3) The DL1 and DL2 terminals are for connecting a DC reactor. If a DC reactor is not used, short the DL1 and DL2 terminals using the short bar supplied.

Note 4) The ⊖terminal and the P terminal are for maintenance

Note 5) Refer to the Instruction Manual for instructions on the shielding process.

Note 6) The motor-side connection depends on the motor specification. The red, white, black green and orange markings are for use with lead type motor power line and brake line. Refer to the motor specifications for cannon plug type connections.

Note 7) Refer to the encoder connection diagram regarding the encoder connector wiring.

Note 8) Power should be supplied by the user. Either of the inputs can be selected.

Note 9) R,S,T,t,r,⊖,P,DL1,DL2,RB1,RB2,U,V,W are high-voltage circuits, all other lines are low-voltage. Ensure sufficient distance between the high- and low-voltage circuits.

Note 10) It is recommended to use a ground fault interrupter conforming to the UL, IEC and EN standards.

Note 11) Do not wire the S phase for a single-phase power amplifier.

Multi-Axis Servo Amplifier

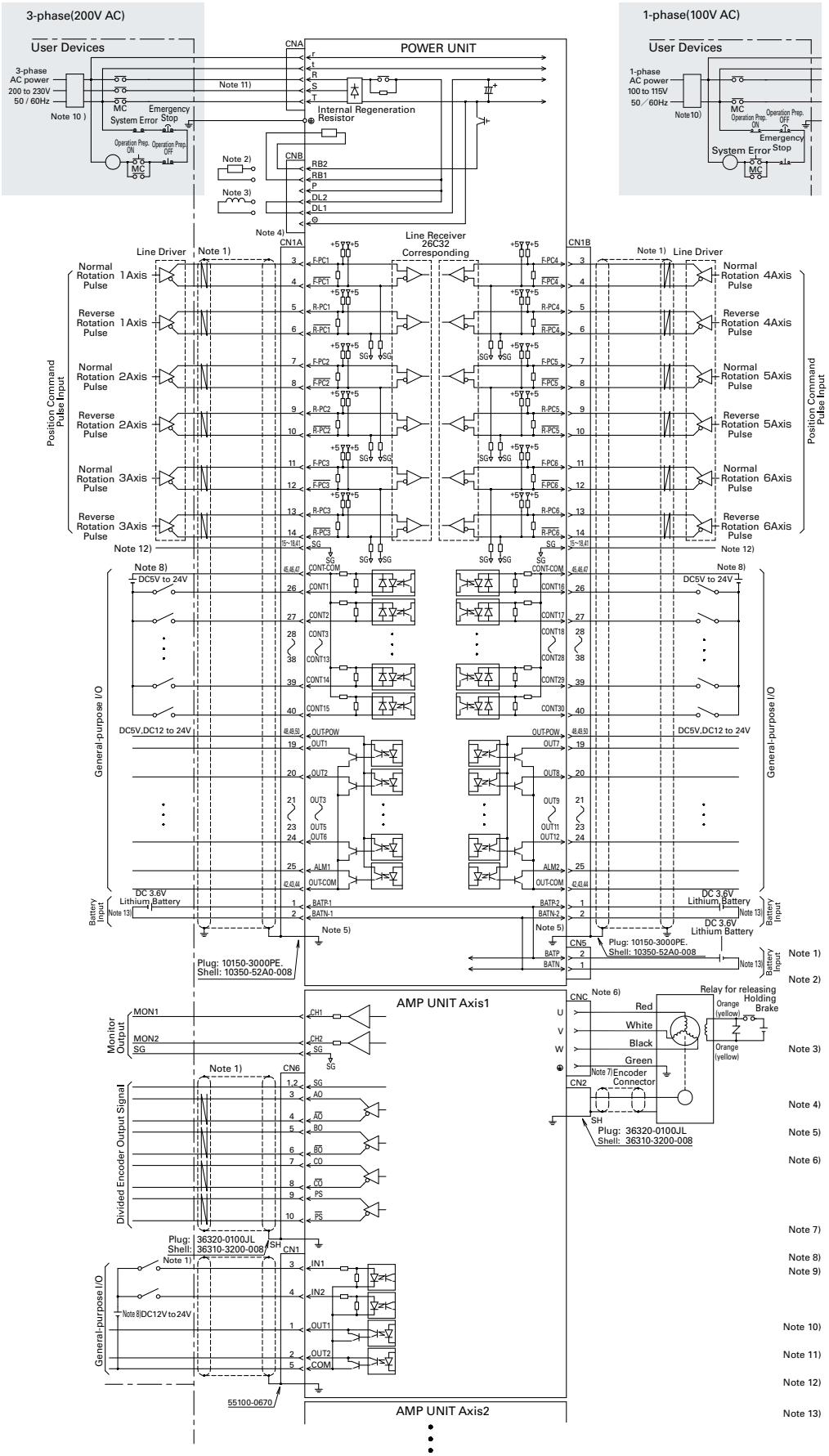

Note 1) For the parts markde , use a shielded cable.

Note 2) Connect a regenerative resistor between terminals RB1 - RB2.When using an external regenerative resistor, first remove the internal regenerative resistor wiring between terminals RB1 and RB2, and then connect an external regenerative resistor between terminals RB1 - RB2.

Note 3) Terminals DL1 and DL2 are dedicated for connecting DC reactors. If a harmonic suppression reactor is not in use, create a short circuit between DL1 and DL2 terminals with the attached shorting bar.

Note 4) The ⊖and P terminals (high-voltage circuit) are reserved for maintenance. Do not wire these terminals.

Note 5) Refer to the Instruction Manual for instructions on the shielding process.

Note 6) Motor connection specifics may vary depending on the motor specifications. Lead-type motor power and brake wires are shown as red, white, black, green, and orange. When using a cannon plug, cannect it according to the motor specifications.

Note 7) For wiriting of the encoder connectors, refer to the encoder wiring diagram.

Note 8) The user must supply the external power supply.

Note 9) R, S, T, r, t, ⊖, P, DL2, RB1, RB2, U, V, W are high-voltage circuits; all other signal lines are low-voltage circuits. When wiring, maintain sufficient distance between high-voltage and low-voltage circuits.

Note 10) Installation of a UL compliant and IEC / EN compliant earth leakage circuit braker is recommended.

Note 11) When wiring the single-phase power supply, do not wire the S-phase to the amplifier.

Note 12) Always connect the SG (signal ground) between devices when using differential operation input signals.

Note 13) The internal battery power is common for all units. tttPlease connect to either CN1A, CN1B or CN5 when using an absolute encoder.

Servo Motor Dimensions (Unit : mm)

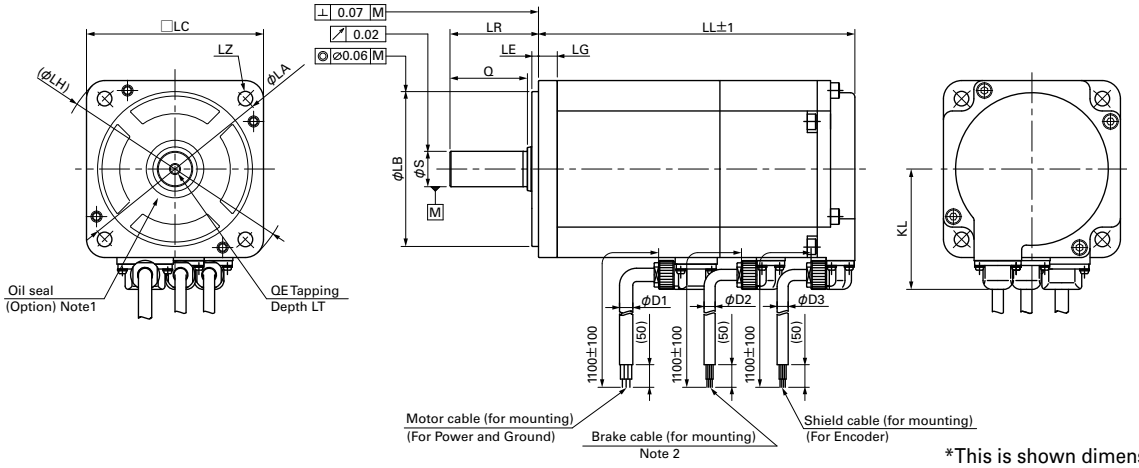

*This is shown dimension for motor with brake

R2 Servo Motor High Efficiency and Low Ripple (Medium Inertia)

	Battery backup method absolute encoder												
	W/out oil seal		With oil seal Note 1										
	W/out brake	With brake	W/out brake	With brake									
MODEL	LL	LL	LL	LL	LG	KL	LA	LB	LE	LH	LC	LZ	LR
R2□A04003 △□◇	51.5	87.5	56.5	92.5	5	35.4	46	0 30-0.021	2.5	56	40	4.5	25
R2□A04005 △□◇	56.5	92.5	61.5	97.5									
R2EA04008 △□◇	72	108	77	113									
R2AA04010 △□◇													
R2□A06010 △□◇	58.5	82.5	65.5	89.5	6	44.6	70	0 50-0.025	3	82	60	5.5	25
R2□A06020 △□◇	69.5	97.5	76.5	104.5									30
R2AA08020 △□◇	66.3	102	73.3	109	8	54.4	90	0 70-0.030		108	80	6.6	
R2AA06040 △□◇	95.5	123.5	102.5	130.5	6	44.6	70	0 50-0.025		82	60	5.5	
R2AA08040 △□◇	78.3	114	85.3	121	8	54.4	90	0 70-0.030	3	108	80	6.6	
R2AA08075 △□◇	107.3	143	114.3	150									40
R2AAB8100 △□◇	137	163	137	163	8	59.4	100	0 80-0.030	3	115.5	86	6.6	35

MODEL	S	Q	QE	LT	D1	D2	D3
R2□A04003 △□◇	0 6-0.008	20	—	—	6	5	5
R2□A04005 △□◇	0 8-0.009						
R2EA04008 △□◇							
R2AA04010 △□◇							
R2□A06010 △□◇	0 8-0.009	25	—	—			
R2□A06020 △□◇	0 14-0.011	25	M5	12			
R2AA08020 △□◇							
R2AA06040 △□◇							
R2AA08040 △□◇		35	M5	12			
R2AA08075 △□◇	0 16-0.011						
R2AAB8100 △□◇	0 16-0.011	30	M5	12			

Note 1: The total length of the motor varies when an oil seal is necessary. (Excluding 86mm sq.)
Note 2: Brake connectors (cables) are not supplied for models without brakes.
Note 3: A reduction in the rating might be needed if an oil seal and Brake is attached.Please consult with us about the details.

For the following encoders, please make inquiries:
・Absolute encoder without battery [RA035C]
・Red. Wiring Incremental Encoder [PP031T]

Single-Axis Servo Amplifier (Analog/Pulse input type , Built-in positioning function model)

RS1 □ 01A □ (15A)

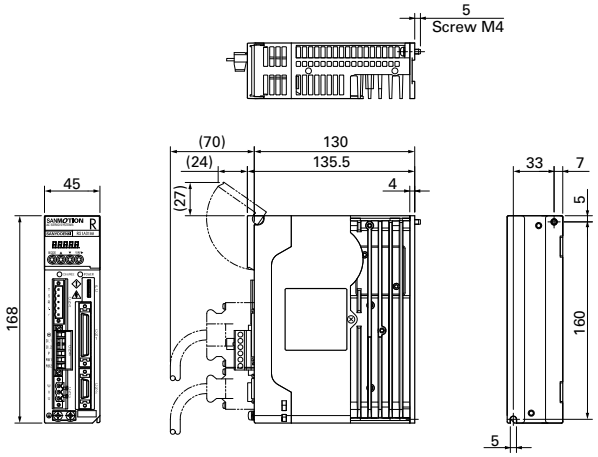

RS1 □ 03A □ (30A)

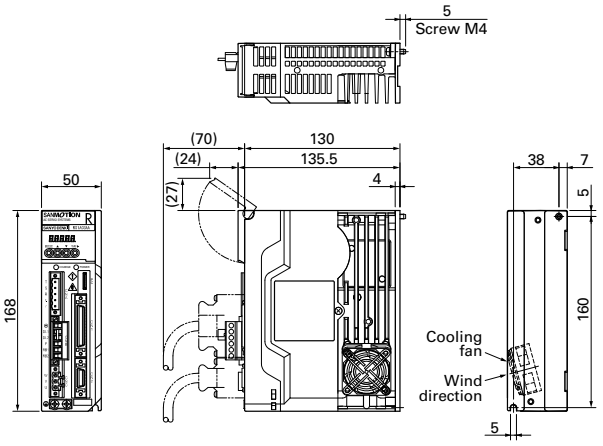

RS1 □ 05A □ (50A)

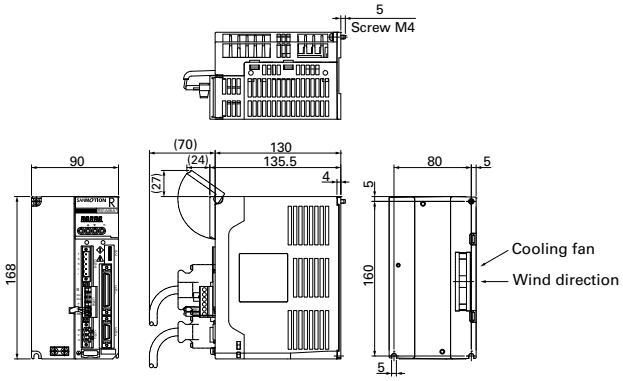

Single-Axis Servo Amplifier with CANopen (Power control AC200V)

RS1A01A □ (15A)

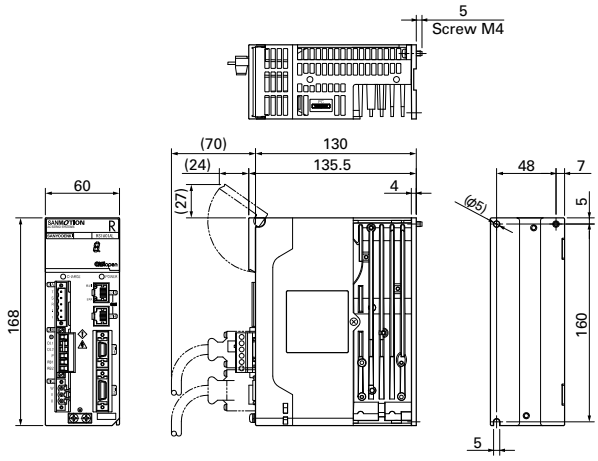

RS1A03A □ (30A)

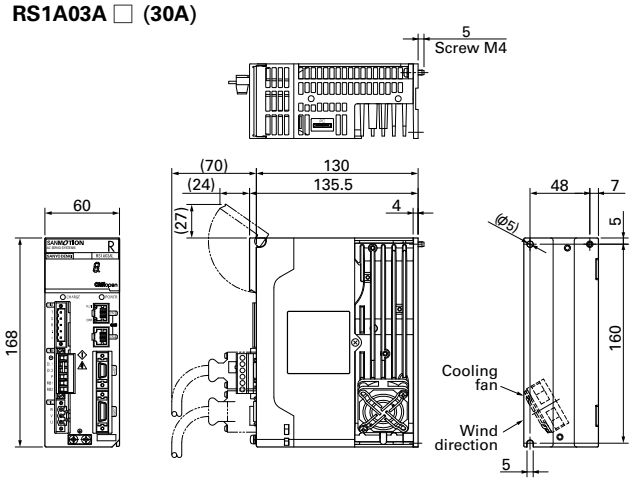

Single-Axis Servo Amplifier with CANopen (Power control AC200V)

RS1A05A □ (50A)

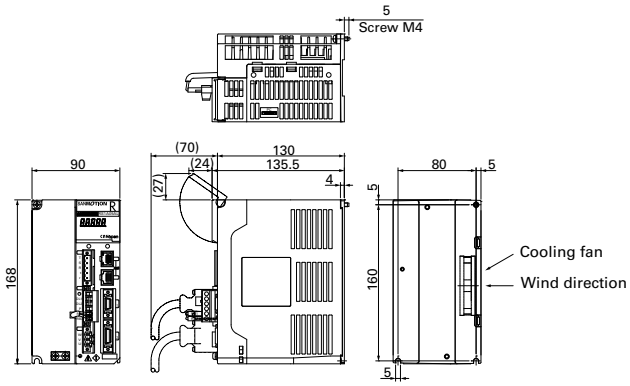

Single-Axis Servo Amplifier with CANopen (Power control DC24V)

RS1J01A □ (15A)

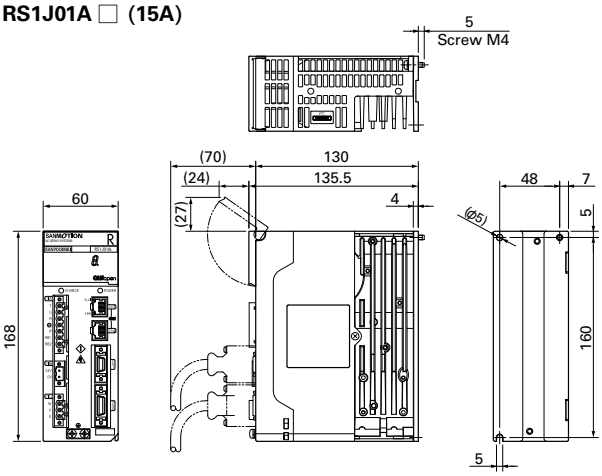

RS1J03A □ (30A)

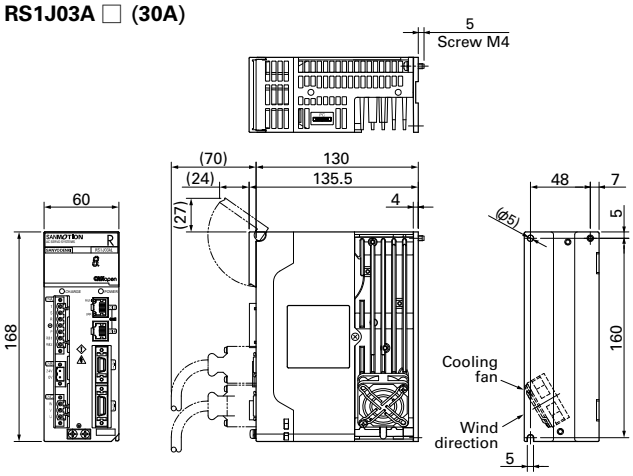

RS1J05A □ (50A)

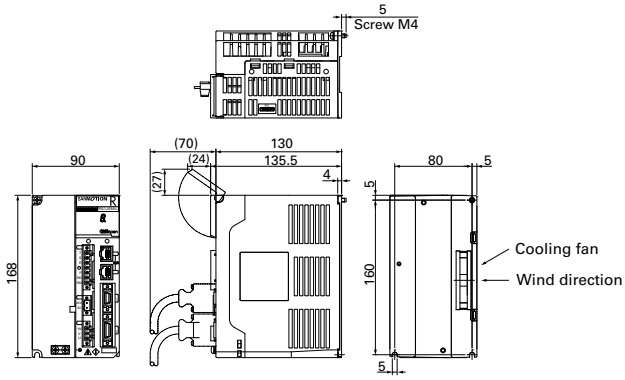

Multi-Axis Sever Amplifier

Amplifier Unit

RR1A01AAB00 (15A)

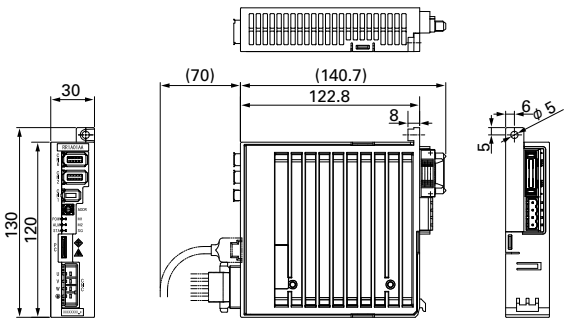

RR1A03AAB00 (30A)

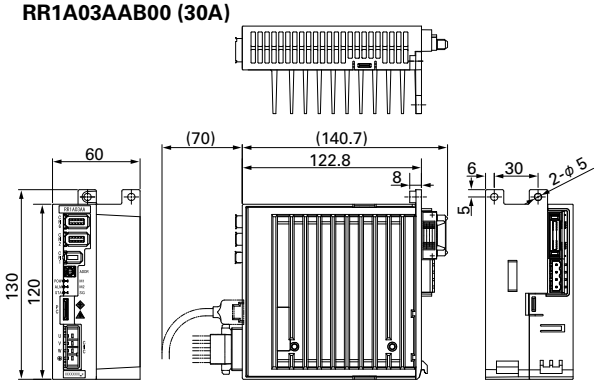

Power Unit

RRPAA00

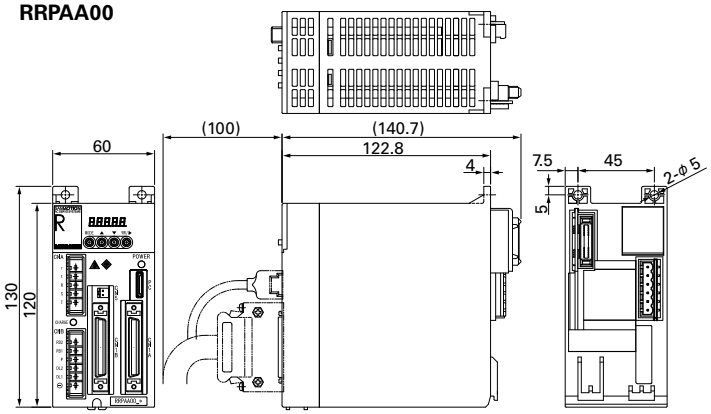

Motherboard

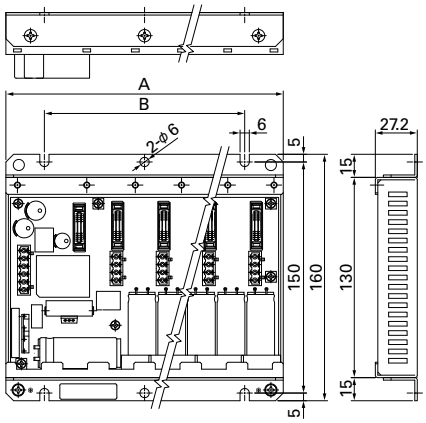

No.	Model No.	Number of Slots	A	B
3	RRMA800	8	300	250
2	RRMA600	6	240	190
1	RRMA400	4	180	130
			Supported size	

System Dimensions

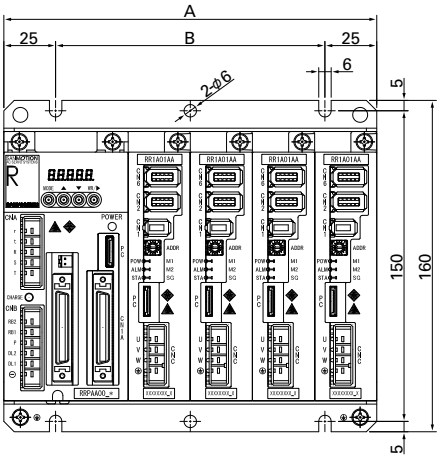

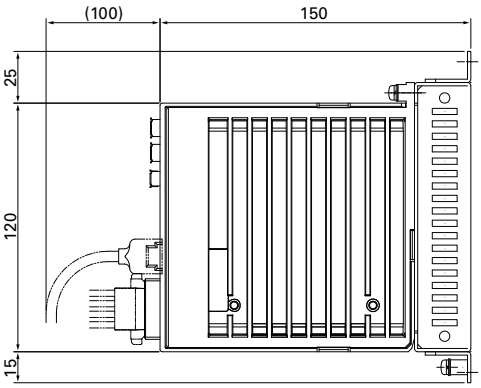

No.	Number of Slots	A	B
3	8	300	250
2	6	240	190
1	4	180	130
		Supported size	

(1) Setup Software Start-up Screen

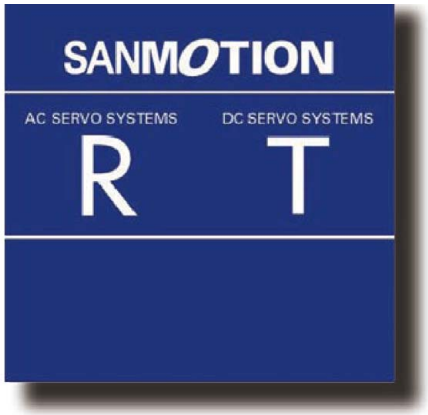

(2) Main Screen

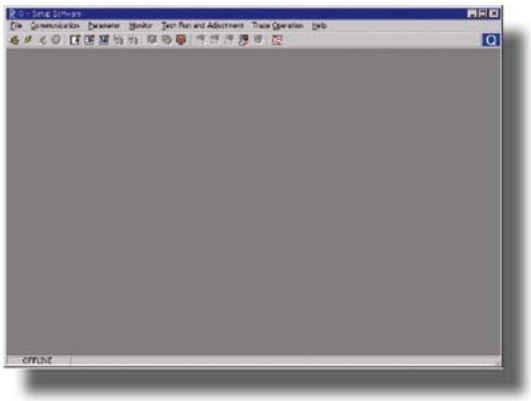

(3) Parameter Configuration Screen

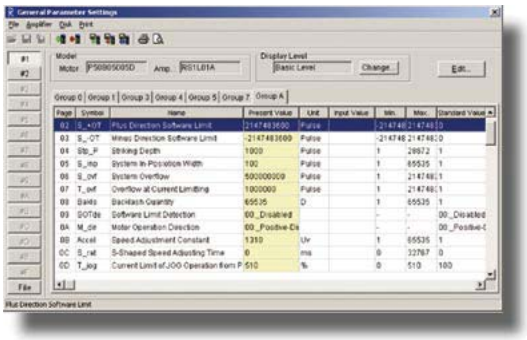

a. Configuration of General Parameters : Enables parameter loading, saving, etc., via PC connection

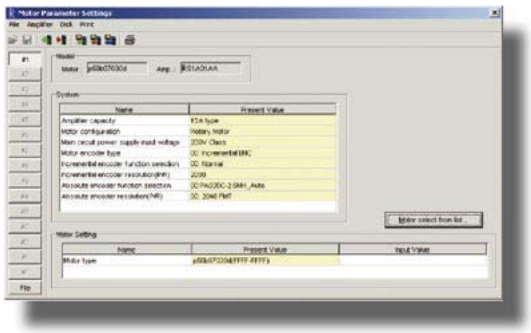

b. Configuration of Motor Parameters : Combined motors can be configured via PC connection

(4) Monitor Functions

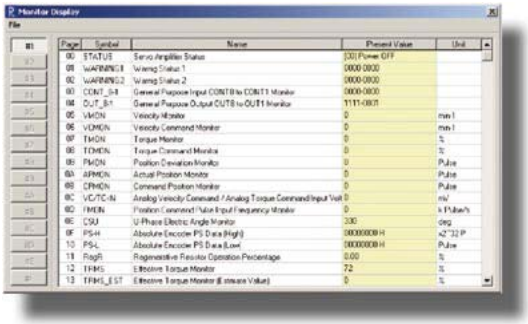

a. Monitor Display : Observe Operation and Input/Output signal status

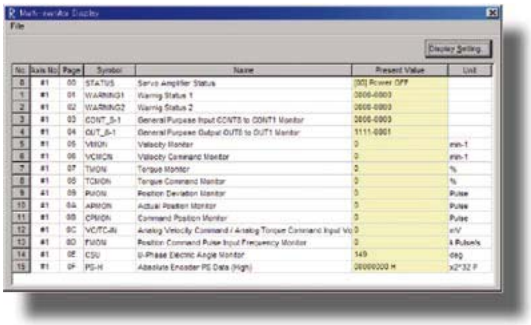

b. Multi-monitor Display : Simultaneous monitoring of operational status of multiple

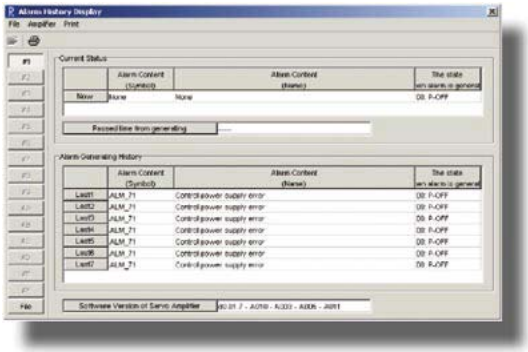

c. Alarm Record Display : Current and past alarm occurrence can be checked.

(5) Test Run and Adjustment Function

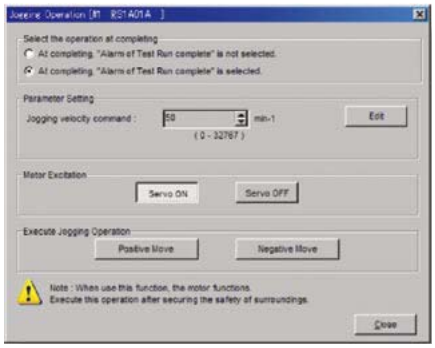

a. Speed Jog : Simplifies motor operation and the issuing of speed commands from a PC

b. Pulse Forward Jog : Simplifies motor operation and the entering of distance and travel speed data from a PC

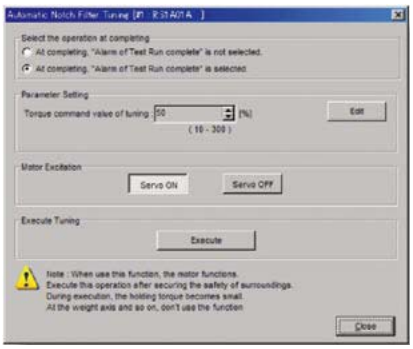

c. Auto Notch Filter Tuning : Configures the appropriate notch filter settings

d. System Analysis : Analyzes servo system frequency characteristics

(6) Operation Trace Function

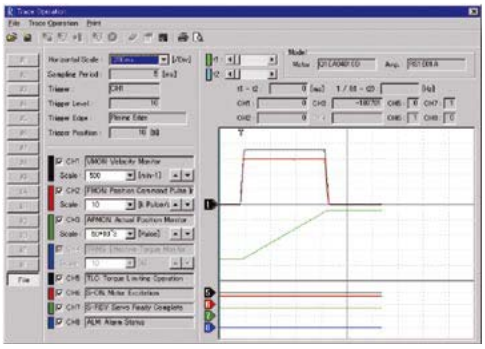

Graphically displays servo motor speed, current, and internal status

Built-in Positioning Function model Screen

Point Data Setup

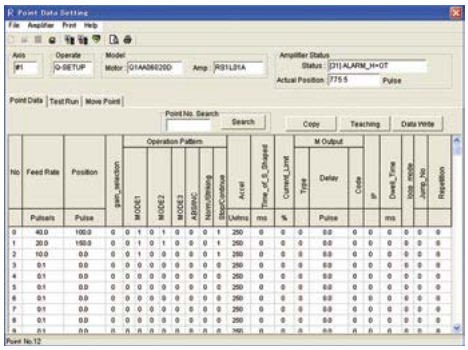

Test Run

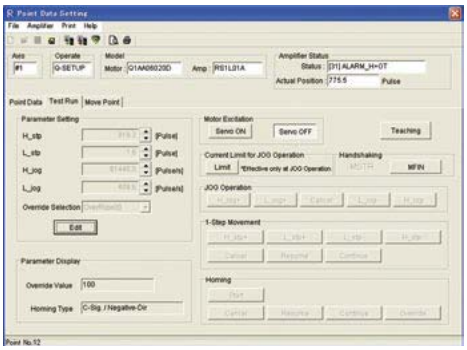

PC Interface Cable [Unit: mm]

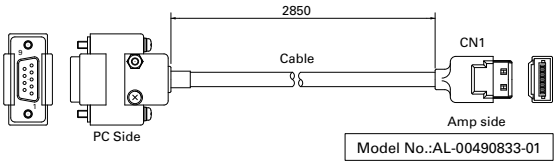

Model No.:AL-00490833-01

Mass:0.14kg

A note regarding RS-232C communications:
The user must provide s PC for computer interface.
Parameter settings may require adijustment.

Lithium battery [Unit: mm]

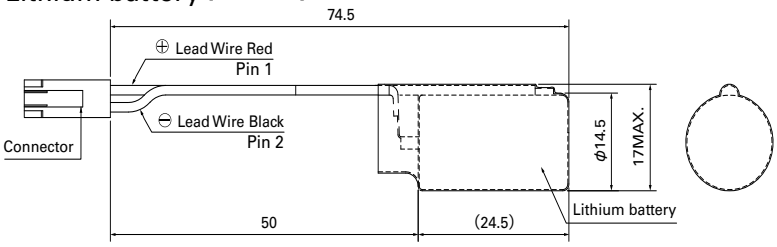

Model No. : AL-00494635-01

Mass : 0.02kg

Mounting Hardware [Unit: mm] * Supported For only Single-axis amplifier.

15A／30A Rear Side

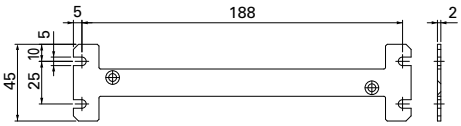

For mounting on the rear side of the amplifer
Model No.:AL-00582791-01
Applicable Amplifiers:RS1*01***
Applicable Amplifiers:RS1*03***
Material:SPCC

50A Rear Side

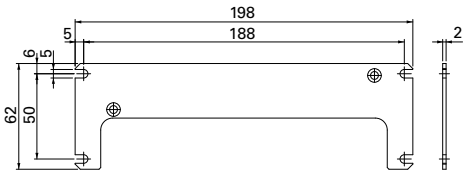

For mounting on the rear side of the amplifer
Model No.:AL-00582792-01
Applicable Amplifiers:RS1*05***
Material:SPCC

15A Front Side

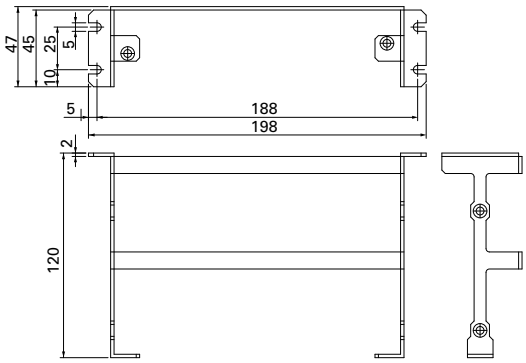

For mounting on the front side of the amplifer
Model No.:AL-00582788-01 Material:SPCC
Applicable Amplifiers:RS1*01***

30A Front Side

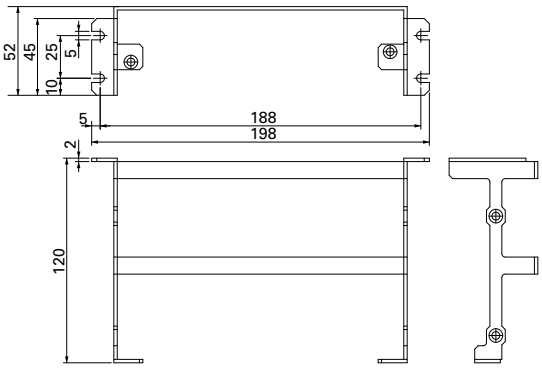

For mounting on the front side of the amplifer
Model No.:AL-00582789-01 Material:SPCC
Applicable Amplifiers:RS1*03***

50A Front Side

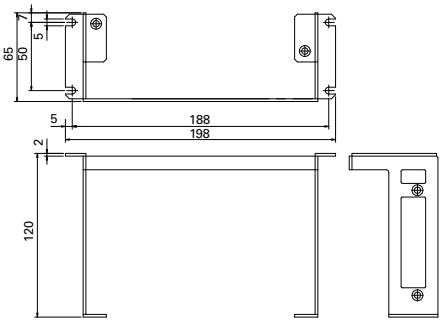

For mounting on the front side of the amplifer
Model No.:AL-00582790-01 Material:SPCC
Applicable Amplifiers:RS1*05***

Model No.	AL-00582791-01	AL-00582792-01	AL-00582788-01	AL-00582789-01	AL-00582790-01
Contents	Mounting Bracket : 1 Screws : 2	Mounting Bracket : 1 Screws : 2	Mounting Bracket : 1 Screws : 6	Mounting Bracket : 1 Screws : 6	Mounting Bracket : 1 Screws : 6

Servo Amplifier built-in positioning function

General Specifications

Positioning Function	Control Shaft Count	Single Shaft
	Register Point Count	Configurable up to 254 points (P000 to P253)
	Maximum No. of Commands	From -2,147,483,648 to +2,147,483,647
	Command Unit	Either mm or pulse is acceptable
	Fast-forward Speed	2,147,483.647mm/sec (0.001mm/when" pulse" is selected)
	Acceleration and Deceleration	Automatic acceleration and deceleration (straight and S switch)
	Point Data Setup	Numerical input via PC, and setup by teaching
	Travel Point Number Setup	Parallel 8 bits (binary code)
	Torque limit	0 to 510% (at 100% rating), but less than instantaneous maximum stall current
	Software Limit	Exists
	Travel Mode	Zero Return, Manual (JOG, 1Step), and Point-specified Travel
	Zone Signal	Maximum of 8 zones
Input and Output	Sequence Input Signals	Servo ON, alarm reset, start up, zero return, manual, override/manual high-speed, cancel, deceleration before origin, external error, over-travel, external data setup1 step forward, interrupt activated, output selection, MFIN, point specified input
	Sequence Output Signals	NC ready, holding brake timing, error, external operation enabled, running, positioning completion, in-position output, zero return completion, general output (8 bits)

Sample operations of the Servo Amplifer built-in positioning function model

By starting up Point 1, Points 2 and 3 will be executed consecutively.

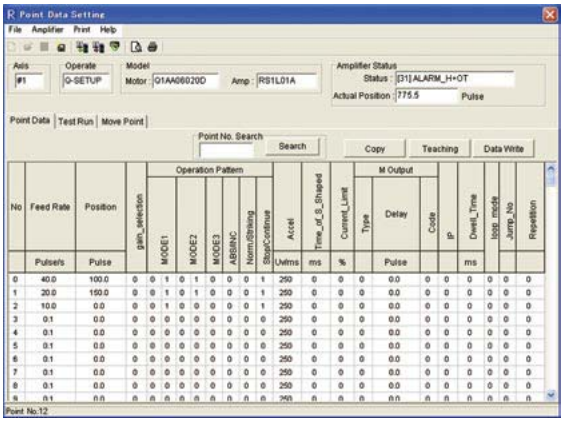

Point Data Setup

Enables configuration and saving of parameters, and the reading of point data from a PC.

Mode 1: [01]= Positioning Operation enabled;
Mode 2: [00]= Final Travel, [01]= Continue to next Point Number
Gear Change: Stop / Continue: [1]= Consecutive Gear Shift Operation

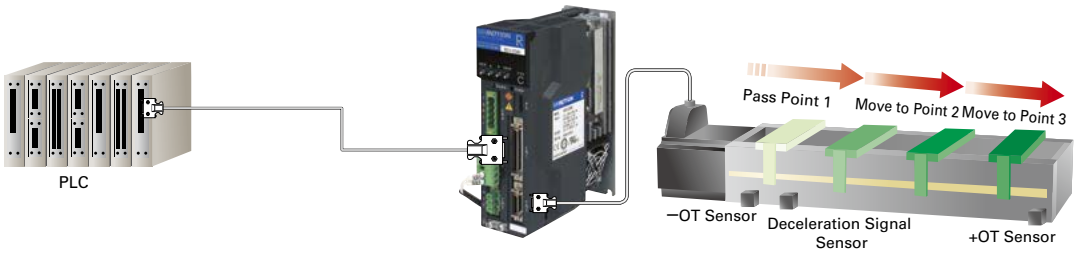

Starting Coordinates: Start-up Point 001 (P001) as 0.0

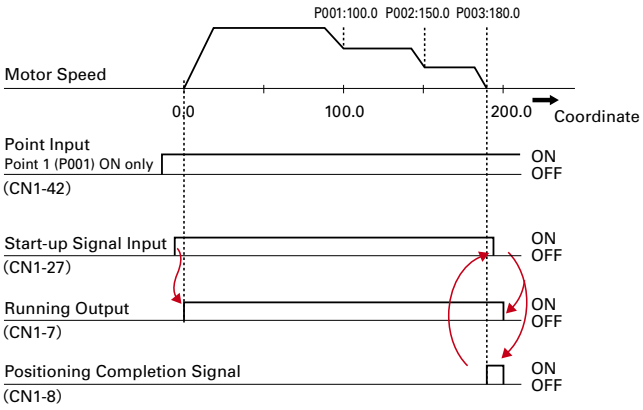

External Regenerative Resistor Dimensions [Unit: mm]

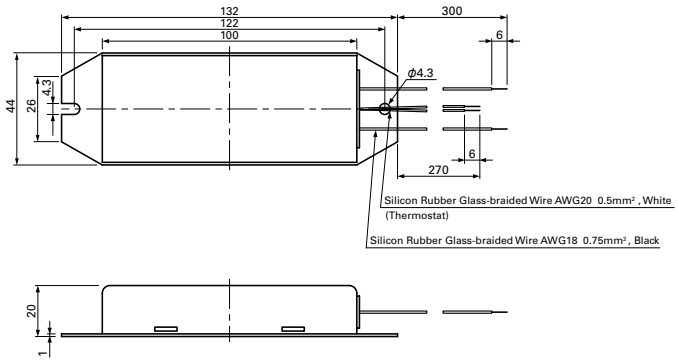

Mass : 0.19kg

	Model No.	Thermostat
1	REGIST-080W100B	Normal close
2	REGIST-080W50B	Normal close

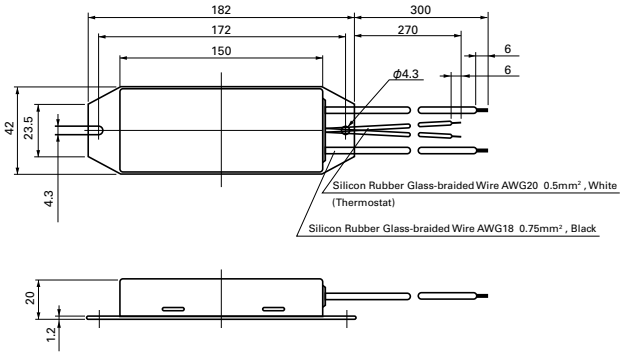

Mass : 0.24kg

	Model No.	Thermostat
1	REGIST-120W100B	Normal close
2	REGIST-120W50B	Normal close

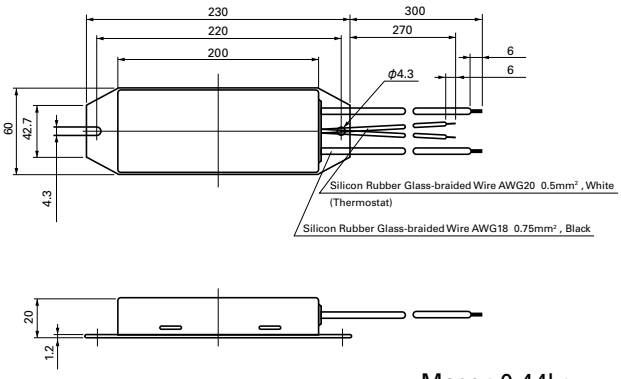

Mass : 0.44kg

	Model No.	Thermostat
1	REGIST-220W20B	Normal close
2	REGIST-220W50B	Normal close
3	REGIST-220W100B	Normal close

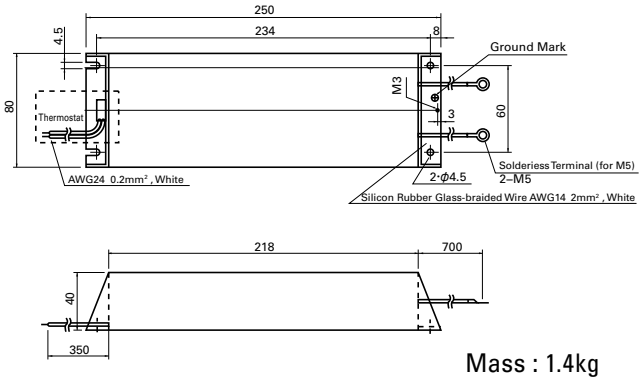

Mass : 1.4kg

	Model No.	Thermostat
1	REGIST-500W20B	Normal close
2	REGIST-500W10B	Normal close

Connectors for Single-Axis Servo Amplifier Connections (200V AC Input Type)

Usage	Contents	Model No.	Manufacturer	Manufacturer's Part No.
Single Connectors	CN1 (Plug, Housing)	AL - 00385594	Sumitomo 3M	10150-3000PE+10350-52A0-008
	CN2 (Plug, Housing)	AL - 00385596		10120-3000PE+10320-52A0-008
	CNA (Plug)	AL - 00329461-01	Phoenix Contact	MSTB2.5/5-STF-5.08
	CNB (Plug) : Accessory	AL -Y0000988-01		IC2.5/6-STF-5.08
	CNC (Plug)	AL - 00329458-01		IC2.5/3-STF-5.08
Connector Sets	CN1,CN2 (Plug, Housing) CNA,CNC (Plug)	AL - 00393603	Sumitomo 3M Phoenix Contact	10150-3000PE+10350-52A0-008 10120-3000PE+10320-52A0-008 MSTB2.5/5-STF-5.08 IC2.5/3-STF-5.08
	CN1,CN2 (Plug, Housing)	AL - 00292309	Sumitomo 3M	10150-3000PE+10350-52A0-008
				10120-3000PE+10320-52A0-008

Connectors for Single-Axis Servo Amplifier Connections (100V AC Input Type)

	Contents	Model No.	Manufacturer	Manufacturer's Part No.
Single Connectors	CN1 (Plug, Housing)	AL - 00385594	Sumitomo 3M	10150-3000PE+10350-52A0-008
	CN2 (Plug, Housing)	AL - 00385596		10120-3000PE+10320-52A0-008
	CNA (Plug)	AL - 00329461-02	Phoenix Contact	MSTB2.5/4-STF-5.08
	CNB (Plug) : Accessory	AL -Y0000988-01		IC2.5/6-STF-5.08
	CNC (Plug)	AL - 00329458-01		IC2.5/3-STF-5.08
Connector Sets	CN1,CN2 (Plug, Housing) CNA,CNC (Plug)	AL - 00492384	Sumitomo 3M Phoenix Contact	10150-3000PE+10350-52A0-008 10120-3000PE+10320-52A0-008 MSTB2.5/4-STF-5.08 IC2.5/3-STF-5.08
	CN1,CN2 (Plug, Housing)	AL - 00292309	Sumitomo 3M	10150-3000PE+10350-52A0-008
				10120-3000PE+10320-52A0-008

Connectors for Servo Amplifier with CANopen

① Main Power : 200V AC, Control Power : 1 ϕ 200V AC

	Contents	Model No.	Manufacturer	Manufacturer's Part No.
Single Connectors	CN1 (Plug, Housing)	AL - 00608710	Sumitomo 3M	10114-3000PE+10314-52A0-008
	CN2 (Plug, Housing)	AL - 00385596		10120-3000PE+10320-52A0-008
	CNA (Plug)	AL - 00329461-01	Phoenix Contact	MSTB2.5/5-STF-5.08
	CNB (Plug) : Accessory	AL - Y0000988-01		IC2.5/6-STF-5.08
	CNC (Plug)	AL - 00329458-01		IC2.5/3-STF-5.08
Connector Sets	CN1,CN2 (Plug, Housing) CNA,CNC (Plug)	AL - 00661731	Sumitomo 3M Phoenix Contact	10114-3000PE+10314-52A0-008 10120-3000PE+10320-52A0-008 MSTB2.5/6-STF-5.08 IC2.5/3-STF-5.08
	CN1,CN2 (Plug, Housing)	AL - 00661729	Sumitomo 3M	10114-3000PE+10314-52A0-008 10120-3000PE+10320-52A0-008

② Main Power : 200V AC, Control Power : 24V DC

	Contents	Model No.	Manufacturer	Manufacturer's Part No.
Single Connectors	CN1 (Plug, Housing)	AL - 00608710	Sumitomo 3M	10114-3000PE+10314-52A0-008
	CN2 (Plug, Housing)	AL - 00385596		10120-3000PE+10320-52A0-008
	CNA (Plug)	AL - Y0000988-02	Phoenix Contact	IC2.5/7-STF-5.08
	CNB (Plug)	AL - 00329460-01		MSTB2.5/2-STF-5.08
	CNC (Plug)	AL - 00329458-01		IC2.5/3-STF-5.08
Connector Sets	CN1,CN2 (Plug, Housing) CNA,CNB,CNC (Plug)	AL - 00667184	Sumitomo 3M Phoenix Contact	10114-3000PE+10314-52A0-008 10120-3000PE+10320-52A0-008 MSTB2.5/7-STF-5.08 MSTB2.5/2-STF-5.08 IC2.5/3-STF-5.08
	CN1,CN2 (Plug, Housing)	AL - 00661729	Sumitomo 3M	10114 - 3000PE+10314-52A0-008 10120 - 3000PE+10320-52A0-008

Connectors for Multi-Axis Servo Amplifier Connections

	Contents		Model No.	Manufacturer	Manufacturer's Part No.
Single Connectors	Amplifier Unit	CN1 (Plug, Housing)	AL -Y0003305-01	Molex	55100-0670
		CN2 (Plug, Housing)	AL - 00632607	Sumitomo 3M	36310-3200-008
		CN6 (Plug, Housing)			36210-0100PL
		CNC (Plug)	AL - 00632604	J.S.T.Mfg.CO.,LTD	04JFAT-SBXGF-I J-FATOT
	Power Unit	CNA (Plug)	AL - 00632600		05JFAT-SBXGF-I J-FATOT
		CNB (Plug) : Accessory	AL - 00632602		06JFAT-SBXGF-I J-FATOT
		CN1A (Plug, Housing)	AL - 00385594	Sumitomo 3M	10150-3000PE
		CN1B (Plug, Housing)			10350-52A0-008
Connector Sets	Amplifier Unit	CN1,CN2 (Plug, Housing) CN6,CNC (Plug)	AL - 00632611	J.S.T.Mfg.CO.,LTD	04JFAT-SBXGF-I
				Molex	55100-0670
				Sumitomo 3M	36310-3200-008 36210-0100PL
	Power Unit	CNA (Plug) CN1A,CN1B (Plug, Housing)	AL - 00632609	Sumitomo 3M	10150-3000PE 10350-52A0-008
				J.S.T.Mfg.CO.,LTD	05JFAT-SBXGF-I

Inquiry Check Sheet

For more information regarding any products or services described here in, please contact your nearest office listed on the back of this catalog.

To SANYO DENKI Co.,LTD.

Date：

Company:

Department:

Name:

Tel: FAX:

E-mail:

	Item	Contents
1	Name of target equipment	Equipment name, category (transport, processing, test, other)
2	Name of servo axis	Axis name, axial mechanism (horizontal/vertical), brake mechanism (yes/no)
3	Current condition of above axis	Manufacturer Name ( ) Series Name ( ) Motor Capacity ( ) Hydraulic, Mechanical, or New System ( )
4	Positioning accuracy	± mm·± μm
5	Operation pattern	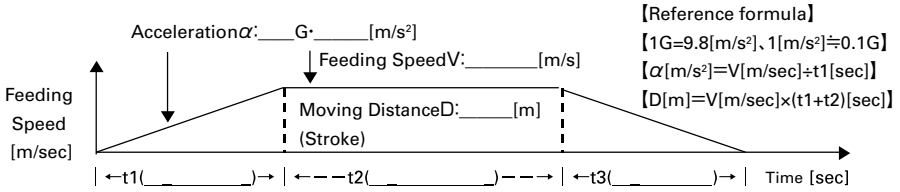
6	Mechanism	Ball-screw/screw-rotation type (horizontal), ball-screw/nut-rotation type (horizontal), rack and pinion (horizontal), belt/chain (horizontal), rotary table, roll feed, instability
7	Mechanical structure	WT(table mass) kg WL(work mass) kg WA(mass of other drive parts) kg WR(rack mass) kg WB(belt/chain mass) kg WC(counterbalance mass) kg Fa(external force axial direction) N Fb(ball-screw preload) N T(roll pushing force) N Dr1(drive-side roll diameter) mm Dr2(follower-side roll diameter) mm Lr1(drive-side roll length) mm Lr2(follower-side roll length) mm G(reduction ratio) JG(speed-reducer inertia) kg·m² JC(coupling inertia) kg·m² JN(nut inertia) kg·m² JO(other motor-axis conversion inertia) kg·m² Db(ball-screw diameter) mm Lb(ball-screw axial length) mm Pb(ball -screw lead) mm Dp(pinion/pulley diameter) mm Lp(pinion axial length) mm tp(pully thickness) mm Dt(table diameter) mm Dh(table-support dianeter) mm LW(load shift from axis) mm Ds(table shaft diameter) mm Ls(table shaft length) mm ρ(specific gravity of ball-screw/pinion/pulley/table-shaft material) kg·cm³ μ(friction coefficient between sheet and shiliding-surface/support-section/roll) ρ1(specific gravity of roll-1 material) kg／cm³ ρ2(specific gravity of roll-2 material) kg／cm³ κ(internal friction coefficient of preload nut) η(mechanical efficiency) JL(load inertia of motor-axis conversion) kg·m² TF(friction torque of motor axis conversion) N·m Tu(imbalance torque of motor axis conversion) N·m
8	Speed reducer	Customer-provided (／)·Sanyo denki standard(planet/spur/no-backlash-planet ／) other(／)
9	Encoder type	Encoder type specified (yes / no) Yes:(Wiring saving incremental encoder, battery backup absolute encoder, absolute encoder for incremental system, battery-less absolute encoder) Resolution( )
0	Input format	Position , velocity , torque , other ( )
A	Host equipment (controller)	Sequencer , laptop , customer-developed product , Sanyo dennki-provided , other ( )
B	Usage environment and other requirements	Cutting , clean-room use , anti-dust measures , other ( )
C	Estimated production	Single product: ( ) units/mouth ( ) units/year
D	Development schedule	Prototype period: ( )Year ( ) Month Production period: ( )Year ( ) Month
E	Various measures	Related documentation (already submitted; send later by mail) Visit/PR desired (yes / no) Meeting desired (yes / no)
F	Miscellaneous (questions, pending problems, unresolved issues, etc.)	

■ ECO PRODUCTS

ECO PRODUCTS

ECO PRODUCTS are designed with the goal of lessening nevironmental impact, from product development to disposal.

■ Precautions For Adoption

⚠ Cautions

Failure to follow the precautions on the right may cause moderate injury and property damage, or in some circumstances,could lead to a serious accident. Always follow all listed precautions.

⚠ Cautions

- Read the accompanying Instruction Manual carefully prior to using the product.
- If applying to medical devices and other equipment affecting people's lives, please contact us beforehand and take appropriate safety measures.
- If applying to equipment that can have significant effects on society and the general public, please contact us beforehand.
- Do not use this product in an environment where vibration is present, such as in a moving vehicle or shipping vessel.
- Do not perform any retrofitting, re-engineering, or modification to this equipment.
- The SERVO SYSTEMS presented in this catalog are meant to be used for general industrial applications. If using for special applications related to aviation and space, nuclear power, electric power, submarine repeaters, etc., please contact us beforehand.

*For any question or inquiry regarding the above, contact our Sales Department.

http://www.sanyodenki.co.jp

SANYO DENKI CO., LTD.
1-15-1, Kita-Otsuka, Toshima-ku, Tokyo 170-8451, Japan — Phone: +81 3 3917 5157

SANYO DENKI *AMERICA, INC.*
468 Amapola Avenue Torrance, CA 90501 U.S.A. — Phone: +1 310 783 5400

SANYO DENKI *EUROPE SA.*
P.A. Paris Nord II 48 Allee des Erables-VILLEPINTE BP.57286 F-95958 ROISSY CDG Cedex France — Phone: +33 1 48 63 26 61

SANYO DENKI *GERMANY GmbH*
Frankfurter Strasse 63-69 65760 Eschborn Germany — Phone: +49 6196 76113 0

SANYO DENKI *KOREA CO., LTD.*
9F 5-2, Sunwha-dong Jung-gu Seoul, 100-130, Korea — Phone: +82 2 773 5623

SANYO DENKI *SHANGHAI CO., LTD.*
Rm2108-2109, Bldg A, Far East International Plaza, No.319, Xianxia Rd., Shanghai, 200051, China — Phone: +86 21 6235 1107

SANYO DENKI *TAIWAN CO., LTD.*
Room 1208, 12F, No.96 Chung Shan N, Rd., Sec.2, Taipei 104, Taiwan, R.O.C. — Phone: +886 2 2511 3938

SANYO DENKI *(H.K.)CO., LIMITED*
Room 2305, 23/F, South Tower, Concordia Plaza, 1 Science Museum Rd., TST East, Kowloon, Hong Kong — Phone: +852 2312 6250

SANYO DENKI *SINGAPORE PTE. LTD.*
10 Hoe Chiang Road #14-03A/04 Keppel Towers Singapore 089315 — Phone: +65 6223 1071

The names of companies and/or their products specified in this catalogue are the trade names, and/or trademarks and/or registered trademarks of such respective companies.

*Remarks : Specifications Are Subject To Change Without Notice.

CATALOG NO. 839-11 '09.12.N