HONSBERG
Member of GHM GROUP


**INDUSTRIAL SENSORS**
FLOW

# Monitor flow with Fludix.

**Spring-supported float-type measuring devices in modular design.**

**"Reliable flow measurement and monitoring in cooling and lubrication circuits is an important part of ensuring plant availability and smooth processes in industrial production. The high-quality instruments from Honsberg have had an outstanding reputation for decades."**

# **Editorial.** Specialists by competence.

**Dear readers,**

The Center of Competence Honsberg of the GHM GROUP has developed and produced industrial sensors in the Remscheid location for more than half a century. The experience and expertise of our staff are the basis of our success. Fulfilment of requirements made by our customers and their applications is our objective and our incentive. Our products are a result of this philosophy.

The following pages are a presentation of the modular Fludix flow meters, which offer a solution for all common applications in the area of flow measuring technology by means of simple combination of a small number of components.

If you are unable to find a suitable solution for your measuring task in our standard assortment, feel free to contact us. We will advise and support you, because we are **specialists by competence.**

Wolfgang Huckenbeck | Oliver Dzierzon | Marco Bick
Honsberg Product Management

# Flow measurement with competence.

Flow measurement and monitoring are very important in industrial production. Basically, wherever plant parts are cooled or lubricated with fluids, reliable monitoring must be used to ensure that this function is actually fulfilled.

The available measuring principles for flow measurement are more diverse than practically any other area of measurement technology. Each method offers specific advantages or even limitations, which must be taken into consideration with the selection of a suitable instrument.

Measuring ranges, accuracy, pressure resistance, operating temperatures, medium resistance of the materials, dynamic characteristics, resistance to contamination, durability and, not lastly, value for money are important factors.

Measurement with spring-supported float-type measuring devices has been proven to be particularly well-suited for cooling and lubrication monitoring. The following pages are a presentation of the modular Fludix system, which offers a solution for this field with simple combination of a small number of components.

With a modular design, the Fludix flow meter can be easily configured and is versatile in use.

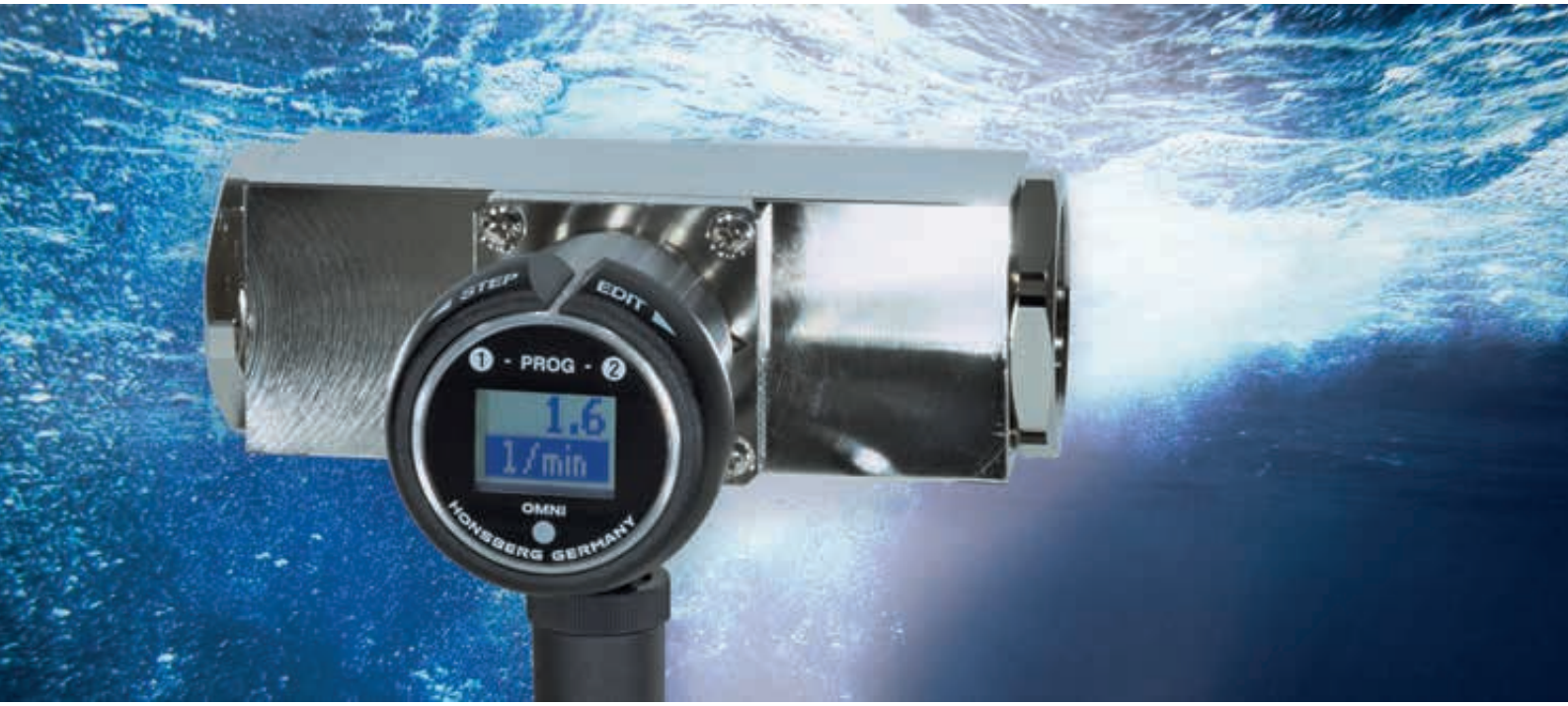

# Durable and reliable.

Spring-supported float-type measurement devices are used when maximum reliability is prioritised over maximum precision for flow measurement and monitoring.

This situation is typical for cooling and lubrication applications. Interruptions of the fluid flow must be detected quickly and safely. The flow rate level is often of secondary interest, so a simple switching function is adequate.

On the other hand, in the scope of energy-efficiency considerations or for recognition of deviations in the sense of preventive maintenance, analogue measurement results find increasing use.

Such requirements can be fulfilled with electronic signal components.
The simple mechanical measurement principle eliminates practically all maintenance in all cases. Operational failures can be detected easily and corrected without the need for specially qualified personnel.

Reliable operating pressures of at least 200 bar are part of our standard offer. Operating pressures of up to 500 bar are possible on request.

With correct use, the instruments offer safety and low operating costs with minimum maintenance efforts for many years.

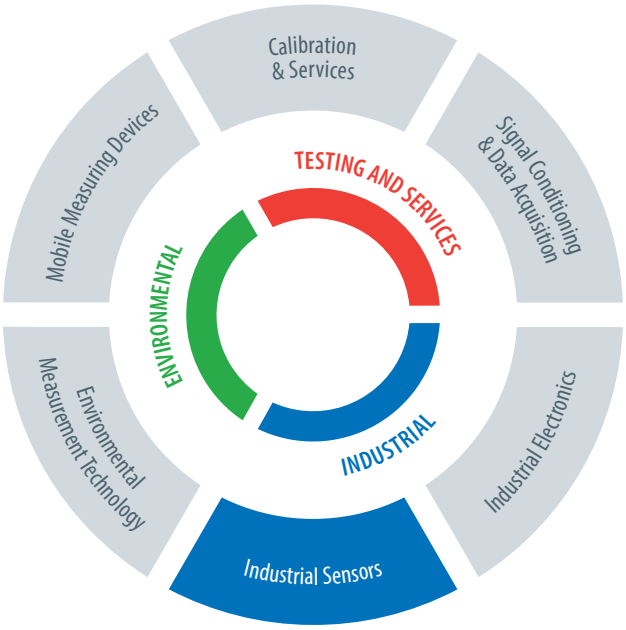


# **Table of contents.** Fludix – spring-supported float-type measuring devices.

**Viscosity compensation** 6

**The measurement principle** 8

**The Fludix system** 10

**Your advantages** 11

**Fludix system quick guide** 12

**The signal units** 14

Mechanical indicator 14

Switching units without ATEX approval 15

Switching units with ATEX approval 16

Electronic signal / switching / measuring units 18

**The float** 20

**The housing** 21

**Contact persons** 22

# **Viscosity compensation.** Measurement of thick and thin.

## Viscosity

The term viscosity expresses the thickness of a medium. The higher the viscosity, the thicker the medium.

Differentiation between the following types of viscosity is made:

- Dynamic viscosity $V_{dyn}$
- Kinematic viscosity $V_{kin}$

When viscosity is discussed, it is usually kinematic viscosity.

It is measured in the unit $mm^2/s$ (see box below). However, the specification is transmitted in cSt (Centistokes). The numerical values of the two units are equal!

The viscosity is an essential property of technical oils. Oils used for industrial purposes are assigned viscosity classes according to ISO. The numerical value indicates the kinematic viscosity at 40 °C.

***Example:*** *ISO VG 68 identifies an oil with a kinematic viscosity of 68 $mm^2/s$ at 40 °C.*

## Units of viscosity

### Dynamic viscosity $V_{dyn}$

Unit in the SI:
1 Pa · s (pascal-second)
= 1000 mPa · s (millipascal-second)
= 1 kg / (m · s)

Unit in the CGS:
1 P (poise)
= 100 cP (centipoise)
= 1 g / (cm · s)

1 mPa · s = 1 cP

### Kinematic viscosity $V_{kin}$

Unit in the SI:
1 $m^2/s$
= $10^6$ $mm^2/s$

Unit in the CGS:
1 St (stokes)
= 100 cSt (centistokes)
= 1 $cm^2/s$

1 $mm^2/s$ = 1 cSt

The dynamic viscosity and kinematic viscosity of a medium are linked by this density ρ:
$V_{dyn} = V_{kin} \cdot \rho$ and / or $V_{kin} = V_{dyn} / \rho$

The factors should be specified in the following units:
$[V_{dyn}]$ = mPa · s or cP $[V_{kin}]$ = $mm^2/s$ or cSt $[\rho]$ = $kg/dm^3$ or $g/cm^3$

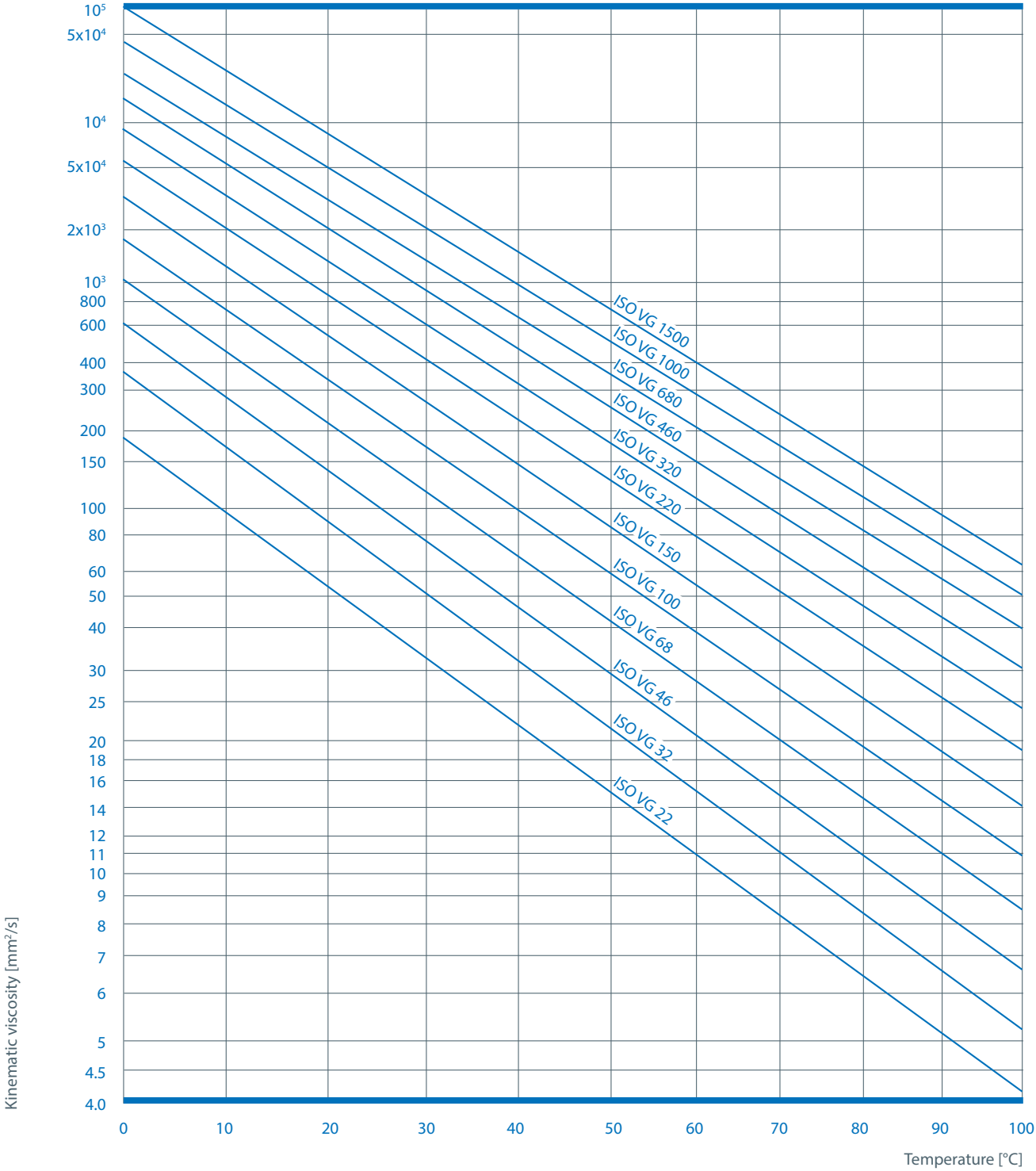


## Viscosity temperature diagram

However, the viscosity is not a constant. It is highly dependent on the temperature of the medium. The higher the temperature, the lower the viscosity, the more fluid the medium is (see the diagram above).

Without additional design measures, the force on the float would also depend heavily on the viscosity, i.e. the measuring device would have different measurement results and/or switching values, although the flow rate is constant.

To avoid this effect, the Fludix flow meters for use with oils are designed so that the measurements are stabilised with viscosity changes in wide ranges.

In the process, the compensated range extends from 30 to 330 mm²/s.

# **The measurement principle.** Force and counter-force.

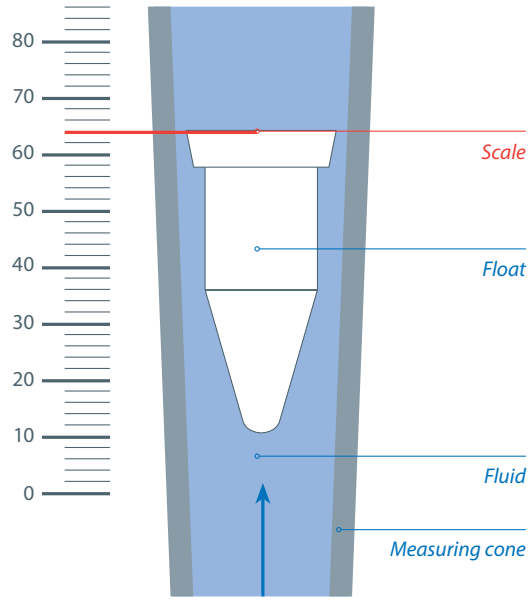


Spring-supported measuring devices are an improvement on the tried and true **float principle** with which medium flows from bottom to top through a conical measuring tube. A float in the flow space is moved against gravity by the medium.

The position of the float depends on the flow. The flow rate can be read relatively exactly on a scale on the transparent measuring tube. The float is not guided. It centres itself with rotation in the flow space.

The disadvantage of conventional floats is that they can only be operated with a flow from bottom to top. The installation lengths are relatively long. Conversion of the float position into an electrical signal is complicated. The transparency of the measuring tube normally often entails inadequate pressure resistance.

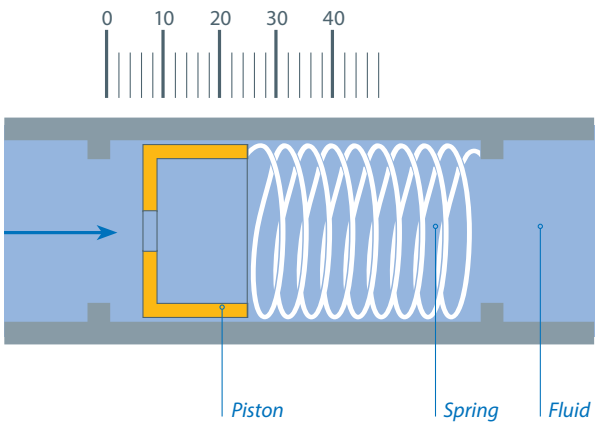


## Spring-mounted float

With **spring-mounted float measuring devices**, the float moves against the force of a spring rather than against gravity.
Therefore, it is no longer an actual float. Practically speaking, it is more of a piston operating in a cylinder, so these instruments are also referred to as piston flow measuring devices.

**In order to be able to determine the position of the piston outside of the flow space, it is provided with magnets. Detection of the magnetic field can take place with different methods.**

## Position indicator

A position indicator is coupled magnetically outside of the flow space. The detection is strictly optical, which provides the advantage that small piston movements are transferred by the lever of the indicator to a larger scale.

*See signal unit MZWO on page 14*

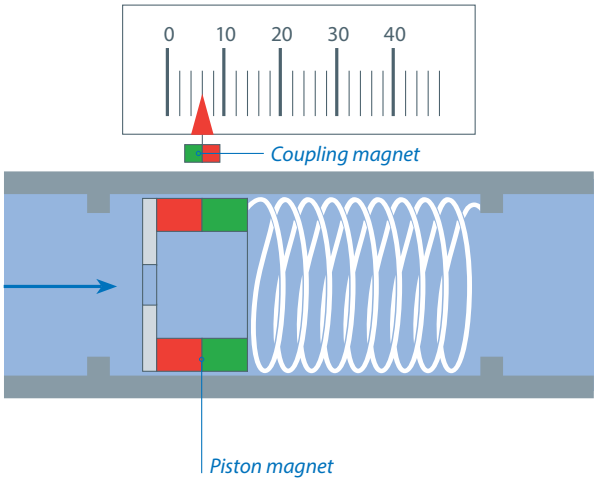


## Reed contact

A Reed switch outside of the flow space is actuated by the magnetic field passing by and thereby generates an electrical signal. The position of the Reed contact determines the flow rate at which switching takes place. It can be configured with a sliding arrangement on the measuring housing or fixed in place in order to achieve switching at a specific flow rate.

*See signal units AH11, AH21, AH41, AH42, FSKV, FSKR on page 15 ff.*

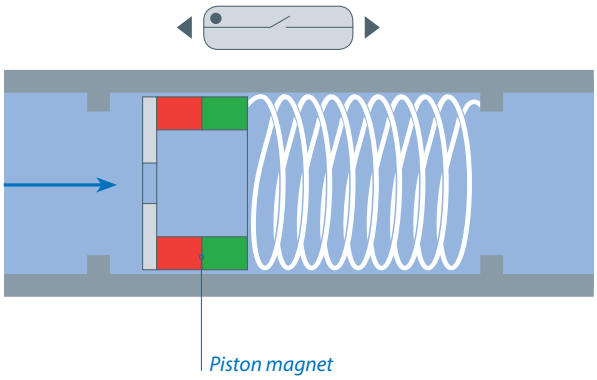


## Hall sensors

The position of the piston is detected electronically with magnetically sensitive sensors. Depending on the electronics, analogue or switching signals can be output and the flow rates can be displayed. Adjustment of different switching values is possible using software. Displacement of the signal unit is not necessary.

*See signal units LBKS, LBKI, FLXI, OMNI on page 18 ff.*

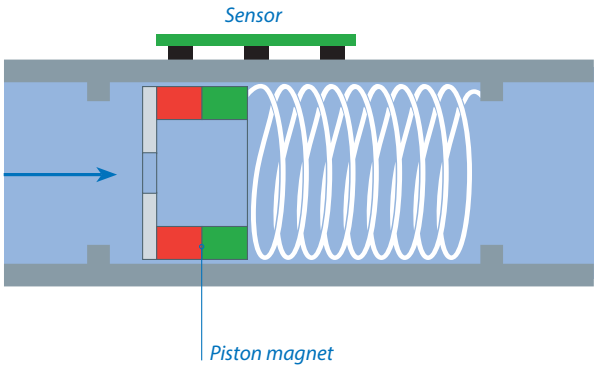

# **The Fludix system.** Versatile, simple, modular.

The Fludix system enables simple configuration of a complete, spring-supported float-type measuring device from only three elements. These elements are: the signal unit, the float and the housing.

## Three simple steps are necessary for configuration:

**1** Select signal unit → **2** Specify float → **3** Specify nominal width and housing

*For the selection table for all components of the Fludix system, see pages 12 and 13.*

## The Fludix system. As easy as one, two, three.

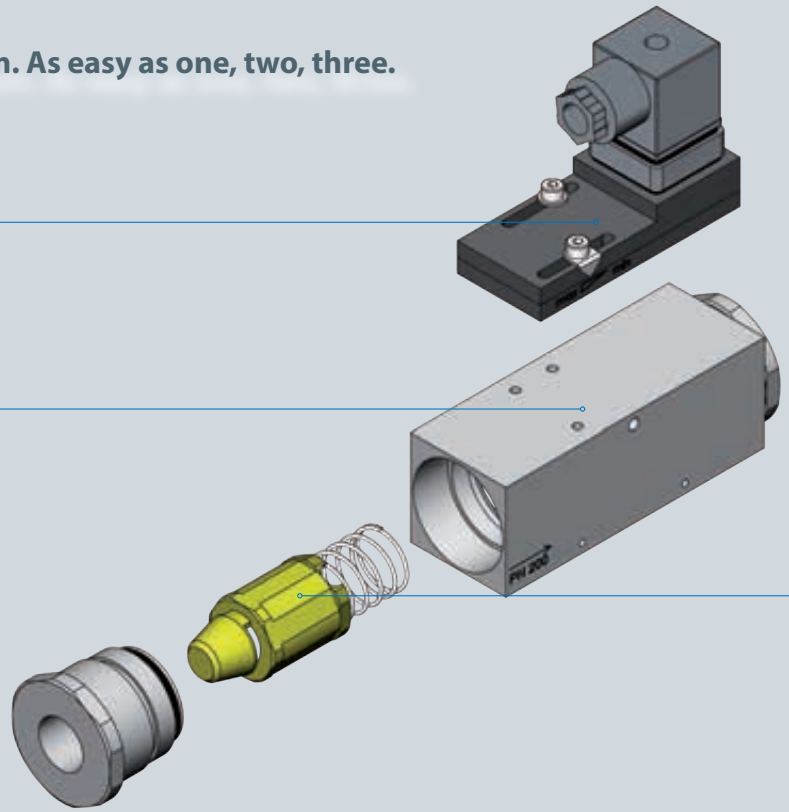


### Signal unit

The signal unit determines the function of the device. The possibilities here extend from the exclusively optical evaluation of the measuring device without electrical function to display of the measurement with LCD and analogue measurement output.

*See the description of all signal units starting on page 14.*

### Float

The float assembly consists of the magnetically-equipped float, the spring and, if applicable, assembly and guide elements. Its dimensioning determines the measuring and switching range. Therefore, assemblies are available for various flow ranges and media (with and without viscosity stabilisation).

*For information about all measuring ranges, refer to the configuration tables on page 12/13.*

### Housing

The housing accommodates the float assembly and offers mounting surfaces for integration of signal units. There are various housings available for the standard widths DN8 to DN50. Brass (nickel-plated) and stainless steel are offered as construction materials.

*See the description of the housing on page 21!*

# The advantages of the Fludix system.

- **Versatile installation**
  possible in any position, because the flow does not have to take place exclusively from bottom to top
- **Space-saving installation**
  with position-independent, compact installation, because short piston travel also enables small installation lengths
- **Wide range of capabilities**
  Simple conversion of the position into an electrical signal
- **Stable operation**
  All-metal design of the housing ensures high pressure resistance
- **Sustainable and efficient**
  Fludix signal units with Reed contact come without a dedicated voltage supply and minimal wiring requirements
- **Increased plant safety**
  redundant display possibilities (local and SCADA) and direct display with position indicator for local checks
- **Improved process quality**
  precise adherence to process requirements with high switching accuracy
- **Efficient**
  resistant to soiling and particles in the measured medium, which means reduced service and maintenance expenses and minimised downtimes
- **Production costs savings**
  reliable performance for the end user means cost reduction, because the piston devices are equipped with safe contacts

# **Fludix system quick guide** Configure your Flud

## 1 Select signal unit

| | FSKV | FSKR | AH11 | AH21 |
|---|---|---|---|---|
| |  |  |  |  |
| PRODUCT REFERENCE | Page 15 | Page 15 | Page 16 | Page 16 |
| SWITCHING | ● | ● | ● | ● |
| MEASURING | | | | |
| INDICATION | | | | |
| FEATURES | | | ATEX approval | ATEX approval |
| HOUSING | Plastic | Plastic | Metal | Metal |
| CONNECTION TYPE | DIN 43650 plug connector | Plug connector M12x1 | Cable | Connection terminals, internal |
| SWITCHING SIGNAL, NUMBER | 1 | 1 | 1 | 1 |
| SWITCHING SIGNAL, TYPE | Inverter | Inverter | Inverter | Inverter |
| ANALOGUE SIGNAL | – | – | – | – |
| AUXILIARY VOLTAGE | – | – | – | – |

## 2 Specify switching or measuring range

| | SWITCHING | MEASURING | | 0,1 | 0.2 | 0.5 | 1 | 2 |
|---|---|---|---|---|---|---|---|---|
| WATER | 25 .. 150 | 30 .. 300 | 150LH | | | | | |
| | 20 .. 90 | 20 .. 200 | 090LH | | | | | |
| | 15 .. 60 | 15 .. 100 | 060LH | | | | | |
| | 10 .. 40 | 10 .. 60 | 040LH | | | | | |
| | 6 .. 60 | 6 .. 65 | 060MH | | | | | |
| | 4 .. 40 | 4 .. 45 | 040MH | | | | | |
| | 3 .. 30 | 3 .. 34 | 030MH | | | | | |
| | 2 .. 20 | 2 .. 23 | 020MH | | | | | |
| | 1 .. 10 | 1 .. 12 | 010MH | | | | | |
| | 0,5 .. 5 | 0,5 .. 6 | 005MH | | | | | |
| | 0.1 .. 1.0 | 0.1 .. 1.2 | 001MH | | | | | |
| VISCOUS MEDIA (30 .. 330 mm²/s) | 50 .. 120 | 50 .. 150 | 120LV | | | | | |
| | 40 .. 90 | 40 .. 120 | 090LV | | | | | |
| | 15 .. 55 | 20 .. 100 | 055LV | | | | | |
| | 10 .. 40 | 10 .. 60 | 040LV | | | | | |
| | 12 .. 60 | 12 .. 65 | 060MV | | | | | |
| | 6 .. 40 | 6 .. 45 | 040MV | | | | | |
| | 2.5 .. 25 | 2.5 .. 30 | 025MV | | | | | |
| | 1.5 .. 15 | 1.5 .. 20 | 015MV | | | | | |
| | 0.5 .. 8 | 0.5 .. 10 | 008MV | | | | | |

## 3 Specify nominal width and housing material

0.1 0.2 0.5 1 2

FLUDIX > FSKV > 040MH 20GM

(Order example)

# ix device in three easy steps

| AH41 | AH42 | LBKS | LBKI | FLXI | OMNI | MZWO |
|---|---|---|---|---|---|---|
|  |  |  |  |  |  |  |
| Page 17 | Page 17 | Page 18 | Page 18 | Page 18 | Page 19 | Page 14 |
| ● | ● | ● | | ● | ● | |
| | | | ● | ● | ● | |
| | | | | | ● | ● |
| ATEX approval | ATEX approval | Minimum hysteresis | Electronic transmitter | Electronic piping widths | Transmitter with digital display | Indicator |
| Plastic | Plastic | Metal | Metal | Metal | Metal | Metal / plastic |
| Cable | DIN 43650 plug connector | Plug connector M12x1 | Plug connector M12x1 | Plug connector M12x1 | Plug connector M12x1 | – |
| 1 | 1 | 1 | – | 1 | 2 | – |
| Inverter | Inverter | electronic | – | electronic | electronic | – |
| – | – | – | 4 .. 20 mA | 4 .. 20 mA | 4 .. 20 mA | – |
| – | – | 18 .. 30 V DC | 18 .. 30 V DC | 18 .. 30 V DC | 18 .. 30 V DC | – |

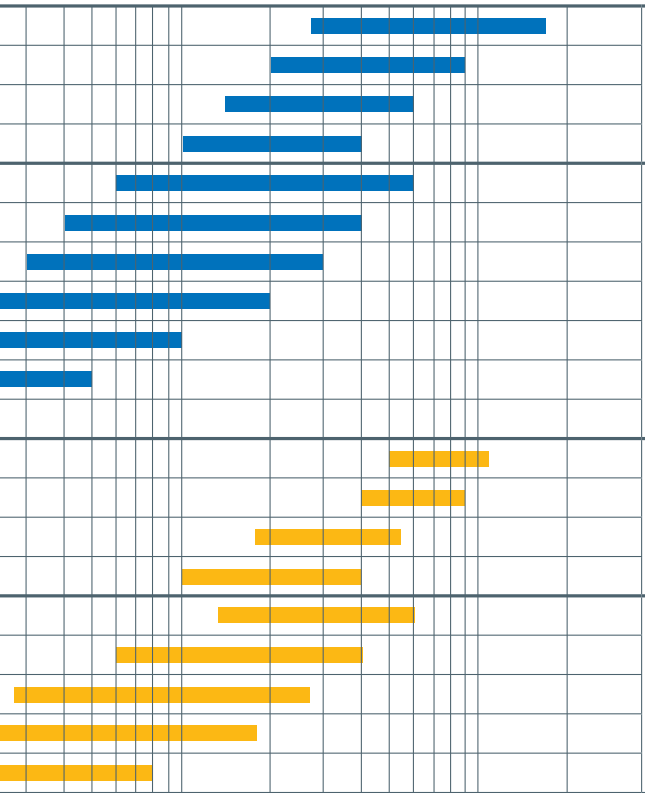


| | 8 | 10 | 15 | 20 | 25 | 32 | 40 | 50 |
|---|---|---|---|---|---|---|---|---|
| DN32 .. 50 | | | | | | ● | ● | ● |
| | | | | | | ● | ● | ● |
| | | | | | | ● | ● | ● |
| | | | | | | ● | ● | ● |
| DN8 .. 25 | | | | | ● | | | |
| | | | | ● | ● | | | |
| | | | ● | ● | ● | | | |
| | | | ● | ● | ● | | | |
| | | ● | ● | ● | ● | | | |
| | ● | ● | ● | ● | ● | | | |
| | ● | ● | ● | ● | ● | | | |
| DN32 .. 50 | | | | | | ● | ● | ● |
| | | | | | | ● | ● | ● |
| | | | | | | ● | ● | ● |
| | | | | | | ● | ● | ● |
| DN8 .. 25 | | | | | ● | | | |
| | | | | ● | ● | | | |
| | | | ● | ● | ● | | | |
| | | ● | ● | ● | ● | | | |
| | ● | ● | ● | ● | ● | | | |
| BRASS | 08GM | 10GM | 15GM | 20GM | 25GM | 32GM | 40GM | 50GM |
| STAINLESS STEEL | 08GK | 10GK | 15GK | 20GK | 25GK | 32GK | 40GK | 50GK |

# **The signal units.** Indicators.

## Type MZWO position indicator

- Optical indicator
- No electrical function
- Scale in l/min
- Improved readability with 40 mm indicator travel
- Metal indicator housing
- Can be used with medium temperatures in the range: – 20 … + 120 °C

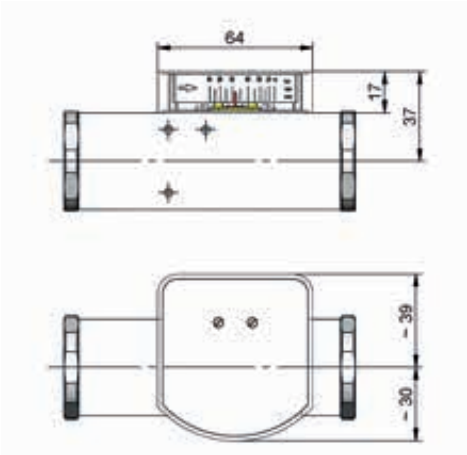


*DN 8 – DN 25*

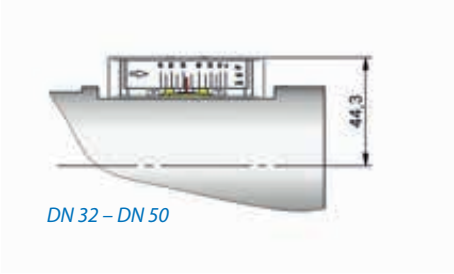


*DN 32 – DN 50*

# **The switching units.** Switching.

## Type FSKV switching unit

- Switching unit with Reed contact
- Connection with plug connector according to DIN 43650-A/ISO 4400
- IP65
- Plastic housing


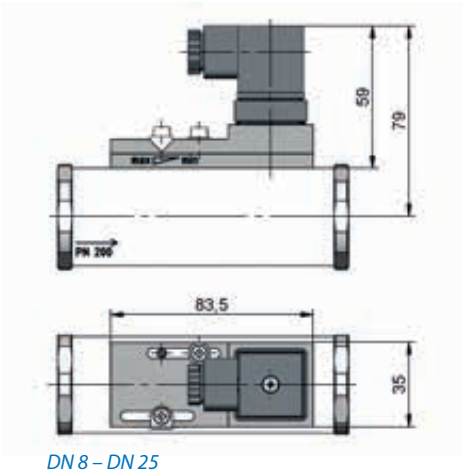


*DN 8 – DN 25*

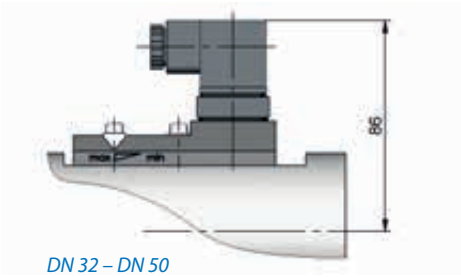


*DN 32 – DN 50*

## Type FSKR switching unit

- Switching unit with Reed contact
- Connection for round plug connector M12x1
- IP67
- Plastic housing

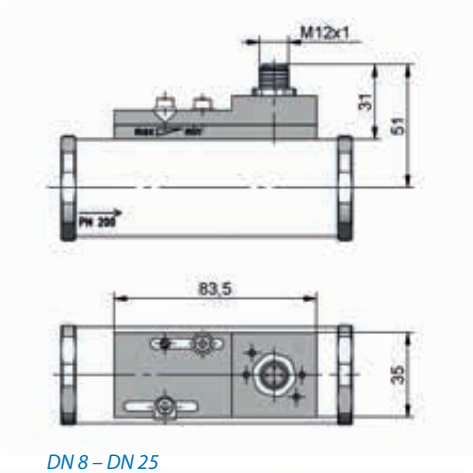


*DN 8 – DN 25*

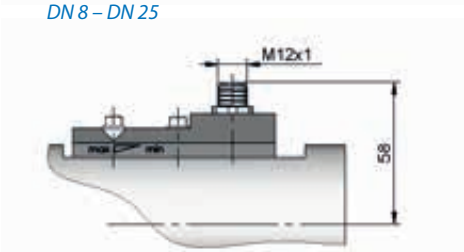


*DN 32 – DN 50*

## Technical data for signal units FSKV and FSKR

- **Switching element:** Reed contact (changeover)
- **Switching power:** 175 V DC / 0.25 A DC / 5 W
  120 V AC / 0.18 A AC / 5 VA
- **Medium temperature:** – 20 … + 120 °C
- **Environmental temperature:** – 20 … + 70 °C
- **Optional:** Switching point adjustment at the factory

# **The switching units.** Intrinsically safe switching.

## ATEX switching units for use in intrinsically safe circuits

The AH series of switching units is designed for use in explosion-prone areas and fulfils the requirements of device group I (Cat. M1) and device group II (Cat. 1G and 1D).

### Type AH11 ATEX switching unit

- Intrinsically safe switching unit with Reed contact
- Connection with 2.5 m cable (optional 5 m)
- Steel housing, coated
- ATEX classification
  - I M1 Ex ia I Ma
  - II 1G Ex ia IIC T4 Ga
  - II 1D Ex ia IIIC T135 °C Da
- Available up to DN25

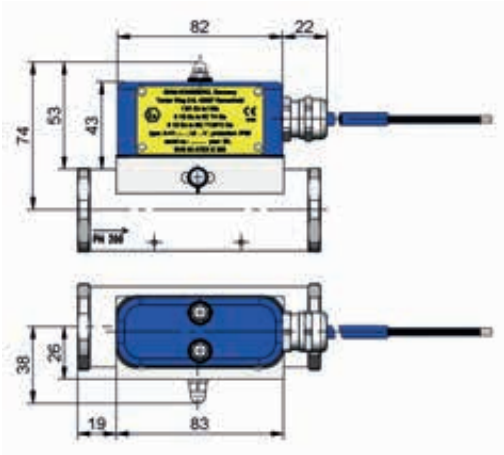


### Type AH21 ATEX switching unit

- Intrinsically safe switching unit with Reed contact
- Terminal connection
- Screw fitting for cable-Ø 7 … 13 mm
- Stainless steel housing
- ATEX classification
  - I M1 Ex ia I Ma
  - II 1G Ex ia IIC T4 Ga
  - II 1D Ex ia IIIB T135 °C Da
- Available up to DN25

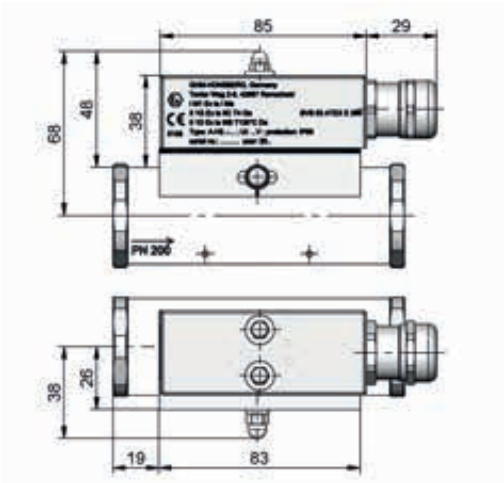


## Type AH41 ATEX switching unit

- Intrinsically safe switching unit with Reed contact
- Connection with 2.5 m cable (optional 5 m)
- Conductive plastic housing
- ATEX classification
  - I M1 Ex ia I Ma
  - II 1G Ex ia IIC T4 Ga
  - II 1D Ex ia IIIC T135 °C Da

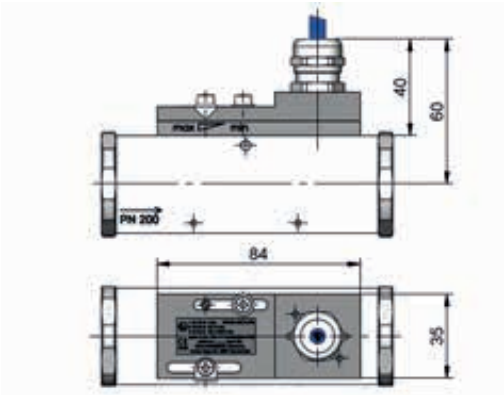


*DN 8 – DN 25*


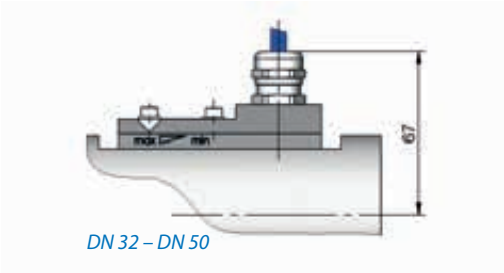


*DN 32 – DN 50*

## Type AH42 ATEX switching unit

- Intrinsically safe switching unit with Reed contact
- Connection with DIN 43650-A / ISO4400 plug connector (with ATEX approval)
- Conductive plastic housing
- ATEX classification
  - I M1 Ex ia I Ma
  - II 1G Ex ia IIC T4 Ga
  - II 1D Ex ia IIIC T135 °C Da

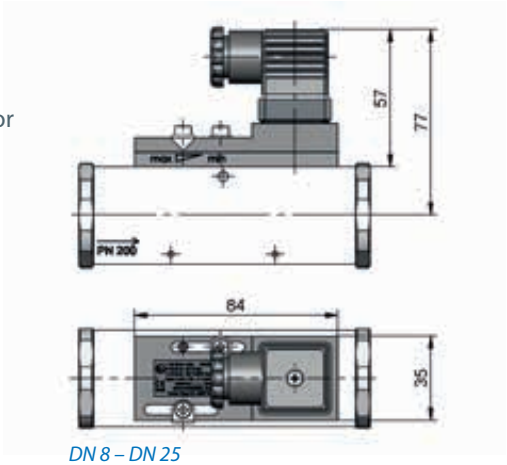


*DN 8 – DN 25*


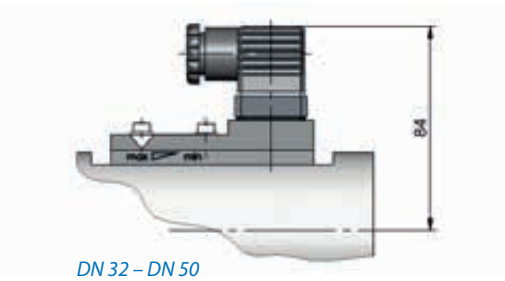


*DN 32 – DN 50*

## Technical data of the ATEX signal units

- **Switching element:** Reed contact (changeover)
- **Switching power:** 30 V / 1.5 A / 50 W
- **Protection rating:** IP65
- **Medium temperature:** – 20 … + 120 °C
- **Environmental temperature:** – 20 … + 50 °C
- **Optional:** Switching point adjustment at the factory

# The signal / switching / measuring units.

## Electronic signal / switching units

Electronic signal / switching units measure the piston position with magnetically sensitive sensors. The integrated microcontroller calculates the current flow rate from the position and specifies it as a switching value, analogue signal or display value. Unlike switching units with a Reed contact, electronic signal units require auxiliary voltage.

### Type LBKS electronic switching unit

- Switching output push-pull
- Output current max. 100 mA

### Type LBKI electronic measuring unit

- Analogue output 4 … 20 mA

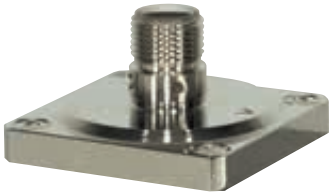

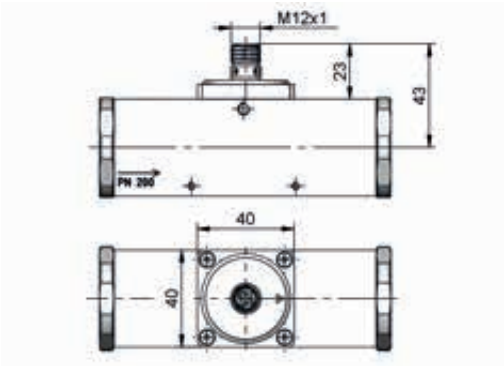


*DN 8 – DN 25*

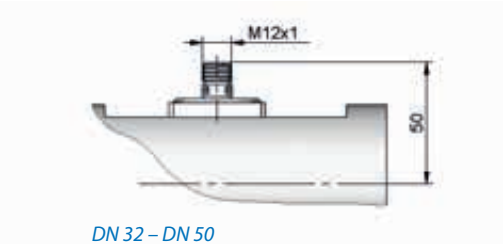


*DN 32 – DN 50*

### Type FLXI electronic signal unit

- Robust stainless steel housing
- Two outputs in one device
  - Analogue output 4 … 20 mA
  - Switching output push-pull

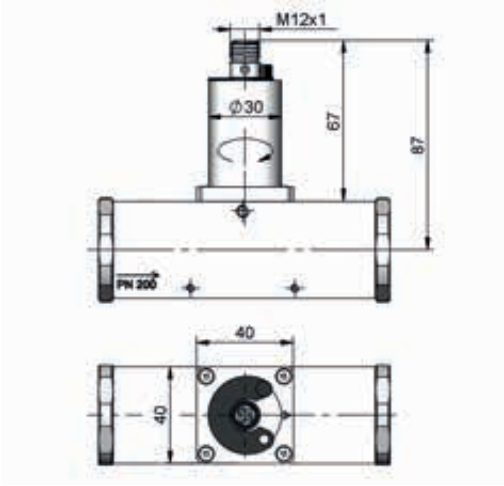


*DN 8 – DN 25*

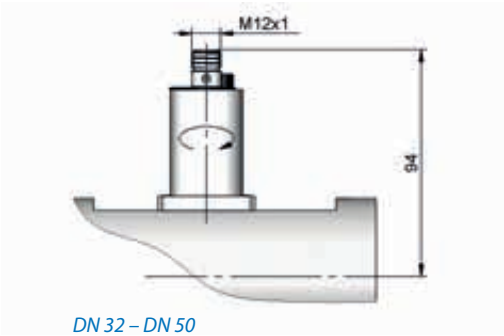


*DN 32 – DN 50*

## Type OMNI electronic measuring and display unit

- Analogue output 4 … 20 mA
- Two push-pull switching outputs
- Digital display with backlighting
- Operation with programming ring


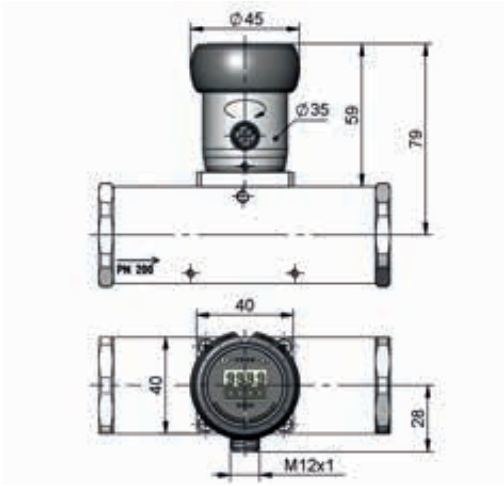


*DN 8 – DN 25*

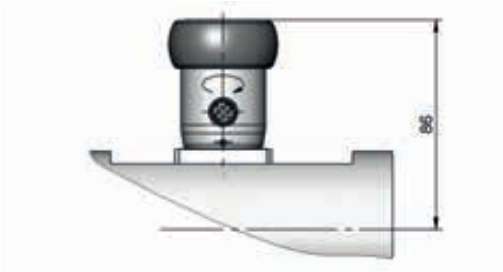


*DN 32 – DN 50*

## Technical data of the electronic units

- **Protection rating:** IP67
- **Connection for round plug connector:** M12x1
- **Auxiliary voltage:** 18 … 30 V DC
- **Can be used with medium temperatures in the range:** – 20 … + 85 °C
- **Environmental temperature:** – 20 … + 70 °C

## Accessories: ECI-3 device configurator

If necessary, the electronic signal units can be programmed with the optionally available ECI-3 device configurator.

# **The float.** Heart of the measurement.


## Float

The float determines the measuring and switching range of the Fludix flow meter. There is a differentiation between float assemblies with and without viscosity stabilisation.

In both versions, different measuring and / or switching ranges are available.

*See overview on page 12 / 13*

*Float assembly with viscosity stabilisation (DN 8 to DN 25)*

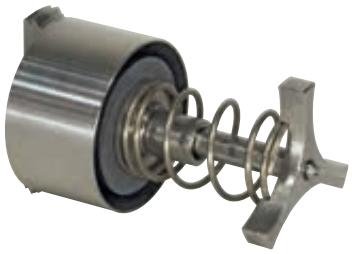

*Stainless steel float assembly without (figure shows version for DN 32 to DN 50)*

*Float assembly without viscosity stabilisation (figure shows version for DN 8 to DN 25)*

# **The housing.** Durable and versatile.

The housings accommodate the float assemblies and connection pieces. They also offer fastening options for various signal units.
There are two housing types for two nominal width ranges. The nominal width – and thus the housing size – must be selected so that they match the desired measuring and / or switching range.

*See overview on page 12 / 13*

The housing and connection pieces are optionally available in nickel plated brass or stainless steel. All housings are pressure-resistant to 200 bar. Higher pressure resistances of up to 500 bar are available on request.

*Housing DN 8 / DN 10 / DN 15 / DN 20 / DN25*

*Housing DN 32 / DN 40 / DN 50*

## Housing DN 8 – DN 25

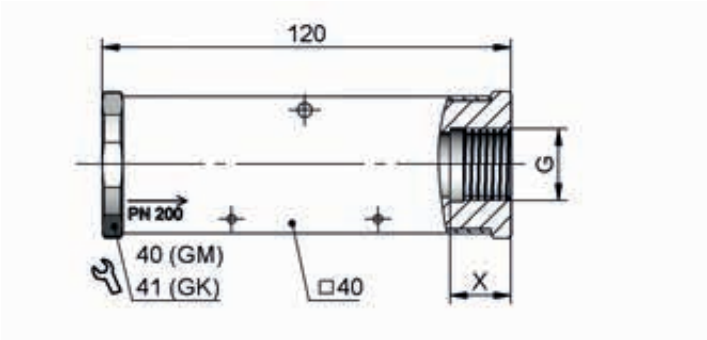


| DN | G | X |
|---|---|---|
| 8 | G ⅜ | 15 |
| 10 | G ¼ | |
| 15 | G ½ | |
| 20 | G ¾ | 18 |
| 25 | G 1 | |

## Housing DN 32 – DN 50

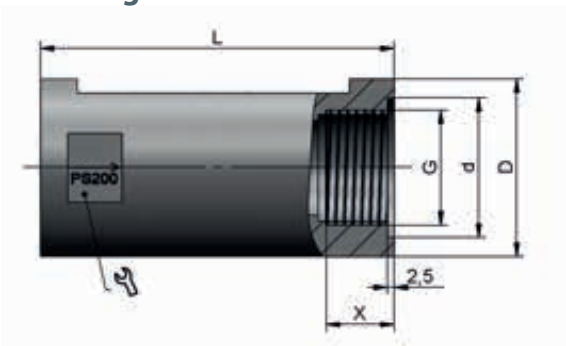


| DN | G | L | D | d | 🔧 | X |
|---|---|---|---|---|---|---|
| 32 | G 1 ¼ | 130 | 65 | 51 | 60 | 23 |
| 40 | G 1 ½ | 170 | | 56 | | 24 |
| 50 | G 2 | 185 | 80 | 70 | 75 | 26 |

# Your contact to us.

GHMGROUP
Specialists by Competence.

## Sales Center Export


info@ghm-group.de
+49 2191 9672-0
+49 2191 9672-40


### Asia and India

- Subsidiary in Mumbai
- Numerous certified partners

### Europe

- 12 locations, including sales centers
- 5 production locations and specialized sales locations

### Americas

- Subsidiary in São Paulo
- Qualified partners

### Africa

- Subsidiary in Johannesburg
- Reliable partners

# Your ideas and requests are our inspiration.
## Challenge us.

The GHM Messtechnik GmbH Group was founded in 2009. However, the history of the traditional brands that are bundled under the umbrella brand goes back much further. In its current formation as the GHM GROUP, the enterprise is still obligated to the shared philosophy of the founders: Absolute customer orientation, speed, and first-class product quality!

**Innovation with method:** An increasing number of tasks in terms of the global economy and in technology reach the limits of feasibility and beyond. We meet this challenge with a broad-based enterprise structure

The Centers of Competence under the umbrella of the GHM GROUP cover a wide range of market-specific solutions for all important areas of application with their respective areas of expertise.

With the GHM GROUP our customers benefit from over 200 years of combined experience. With this expertise, our engineers at the various "Centers of Competence" are quickly and flexibly in a position to develop solutions that meet the specific requirements of our customers and are in-line with market demand.

**It is an advantage of our enterprise, which is unrivalled.**

GHMGROUP
Specialists by Competence.

| GREISINGER | HONSBERG | Martens | IMTRON | DeltaOHM | VAL.CO |
|---|---|---|---|---|---|
| **Center of Competence** Portable Measuring Devices | **Center of Competence** Industrial Sensors | **Center of Competence** Industrial Electronics | **Center of Competence** Signal-Conditioning and Data Acquisition | **Center of Competence** Environmental Measuring Technology & Meteorology | **Center of Competence** Industrial Sensors |

### INDUSTRIAL

- Sensors for a variety of process variables such as temperature, flow, level and pressure
- Transmitters and isolators for various input/ output variables
- Indicators and controllers in various formats and performance classes

### ENVIRONMENTAL

- Measuring stations for climate and environmental data with the connection to cloud-systems
- Mobile measurement technology for climate, water and gas analysis

### TESTING & SERVICES

- Test bench measurement technology wit up to 40,000 measurement in the secondary
- Stationary and mobile systems for universal use
- Modular systems for individual adaption to the process needs

GHMGROUP
Specialists by Competence.

Your direct contact to us

**+49 2191 9672-0**

**info@ghm-group.de**

## Headquarters

GHM Messtechnik GmbH
**GHM GROUP CORPORATE**
Tenter Weg 2-8
42897 Remscheid | GERMANY
Phone +49 2191 9672-0
Fax +49 2191 9672-40
info@ghm-group.de
www.ghm-group.de

## Center of Competence

GHM Messtechnik GmbH
**GHM GROUP – Greisinger**
Hans-Sachs-Straße 26
93128 Regenstauf | GERMANY
Phone +49 9402 9383-52
Fax +49 9402 9383-33
info@greisinger.de
www.greisinger.de

GHM Messtechnik GmbH
**GHM GROUP – Honsberg**
Tenter Weg 2–8
42897 Remscheid | GERMANY
Phone +49 2191 9672-0
Fax +49 2191 9672-40
info@ghm-group.de
www.ghm-group.de

GHM Messtechnik GmbH
**GHM GROUP – Martens**
Kiebitzhörn 18
22885 Barsbüttel | GERMANY
Phone +49 40 67073-0
Fax +49 40 67073-288
info@ghm-group.de
www.ghm-group.de

GHM Messtechnik GmbH
**GHM GROUP – Imtron**
Carl-Benz-Straße 11
88696 Owingen | GERMANY
Phone +49 7551 9290-0
Fax +49 7551 9290-90
info@ghm-group.de
www.ghm-group.de

Delta OHM S.r.l. a socio unico
**GHM GROUP – Delta OHM**
Via Marconi 5
35030 Caselle di Selvazzano
Padova (PD) | ITALY
Phone +39 049 8977150
info@deltaohm.com
www.deltaohm.com

Valco srl
**GHM GROUP – Val.co**
Via Rovereto 9/11
20014 S. Ilario di Nerviano
Milano (MI) | ITALY
Phone +39 0331 53 59 20
valco@valco.it
www.valco.it

## GHM GROUP International

**Austria**
GHM Messtechnik GmbH
Office Austria
Breitenseer Str. 76/1/36
1140 Vienna | AUSTRIA
Phone +43 660 7335603
a.froestl@ghm-messtechnik.de
www.ghm-group.de

**Brazil & Latin America**
GHM Messtechnik Do Brasil Ltda
Av. José de Souza Campos,
1073, cj 06 | Campinas, SP
13025 320 | BRAZIL
Phone +55 19 98275 0069
info@grupoghm.com.br

**Czech Republic / Slovakia**
GHM Greisinger s.r.o.
Ovci hajek 2 / 2153
158 00 Prague 5
Nove Butovice | CZECH REPUBLIC
Phone +420 251 613828
Fax +420 251 612607
info@greisinger.cz
www.greisinger.cz

**Denmark**
GHM Maaleteknik ApS
Maarslet Byvej 2
8320 Maarslet | DENMARK
Phone +45 646492-00
Fax +45 646492-01
info@ghm.dk
www.ghm.dk

**France**
GHM GROUP France SAS
Parc des Pivolles
9 Rue de Catalogne
69150 Décines (Lyon) | FRANCE
Phone +33 6 60 32 06 35
contact@ghm-group.fr
www.ghm-group.fr

**India**
GHM Messtechnik India Pvt Ldt.
209 | Udyog Bhavan
Sonowala Road | Gregaon ( E )
Mumbai - 400 063 | INDIA
Phone +91 22 40236235
info@ghmgroup.in
www.ghmgroup.in

**Italy**
Sales Greisinger & Delta OHM
GHM GROUP – Delta OHM
Via Marconi 5
35030 Caselle di Selvazzano
Padova (PD) | ITALY
Phone +39 049 8977150
info@deltaohm.com

**Italy**
Sales Honsberg, Martens, Val.co
GHM GROUP – Val.co
Via Rovereto 9/11
20014 S. Ilario di Nerviano
Milano (MI) | ITALY
Phone +39 0331 53 59 20
alessandro.perego@valco.it

**Netherlands**
GHM Meettechniek BV
Zeeltweg 30
3755 KA Eemnes
NETHERLANDS
Phone +31 35 53805-40
Fax +31 35 53805-41
info@ghm-nl.com
www.ghm-nl.com

**South Africa**
GHM Messtechnik SA (Pty) Ltd
16 Olivier Street
Verwoerdpark, Alberton 1453
SOUTH AFRICA
Phone +27 74 4590040
j.grobler@ghm-sa.co.za

Visit us: **www.ghm-group.de**

07 / 2019 / en