Operation Manual for NJP-400C full-automatic capsule filling machine

1、 Overview：NJP-400C full-automatic capsule filling machine fills powder, particles and tablet materials into empty capsules. The device conducts filling through stopples, batches and frequency control. It is suitable for automatically filling, separating, (eliminating wasted contents) sealing up the powder or particle drugs to finished products. Our factory indigenously developed this filling device according to the advantages of similar devices at home and broad, as well as the practical national conditions. The production process is completely in conformity with GMP regulations.

2、Technical characteristics and parameters：

2.1 Overall dimension: 1000×710×1900mm(see Fig 1)

2.2 Weight: 600Kg

2.3 Power input:380V　50Hz　3P

2.4 Power: 3KW

2.5 Water supply requirements: The device is dry vacuum pump. Vacuum degree ranges from 0.02～-0.06MPa(no need for water supply)

2.6 Work environment:Temperature:　21℃±3℃

Relative humidity:30～40%

2.7 Air supply requirement: When the device is operating industrial vacuum cleaner with gas displacement quantity of　160m³/h to suck residual powder and capsule.

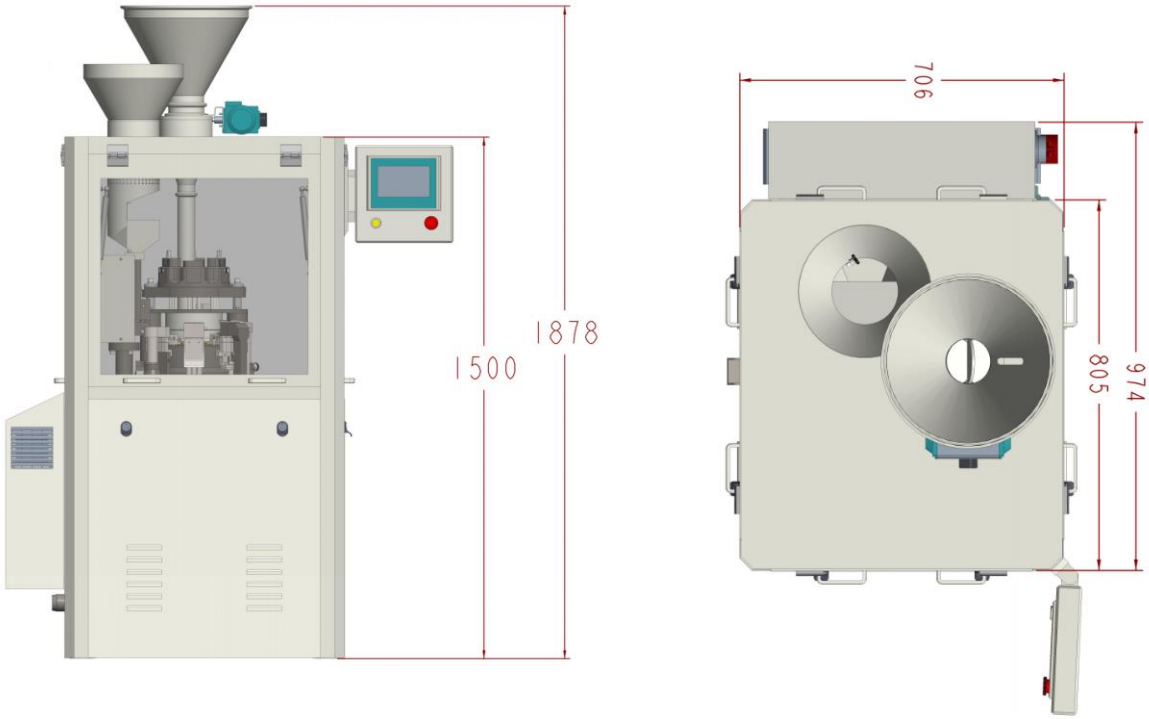

Fig 1 Overall dimension of device

3、Device installation and connection to power supply：

The device should be installed on the level ground with enough bearing capacity. If it is installed on upper floors, the bearing capacity should not be less than 1000kg/m^2. Rubber cushion and level gauge should be used to fixate the device on the horizontal plane.

Further examination: rotate the handle of the device several times. Lubricate the component parts according to maintenance requirements.

To prevent pollution, clean all the spare parts that directly touches the product medicine with ethyl alcohol.

Before connecting to power source, voltage and frequency should conform to power source. The main motor transmission is controlled by frequency changer. clockwise rotation is the direction of the revolving platform. Observe the rotating direction of vacuum cleaner to check whether it conforms to target orientation. If it is reversed, adjust and swop the two power lines. The vacuum pump, vacuum cleaner and mixing motor are in unitary control through internal wiring.

4、Working principle of the device(See Fig 2, 3, 4 and 5)

When the device is operating,

In Station 1, the capsule bucket inserts the capsules vertically into the baffle one by one. The horizontal fork pushes them to the external end of correction block. Then, the vertical fork absorbs them to the module holes, separates the head from the body.

In Station 2, upper module declines to lower module and moves externally

In Station 3, as for powder filling, powder in the chamber is compressed for

five times into the capsules.

Station 4 can eliminate and absorb the defective capsules through the dust suction pipelines.

In Station 5, the upper module moves downward. Lower module moves inward.

In Station 6 , the lockup rod rises to seal the filled capsules.

In station 7, the sealed capsules are ready to be collected.

In station 8, the vacuum cleaner hole is cleaned for the next cycle.

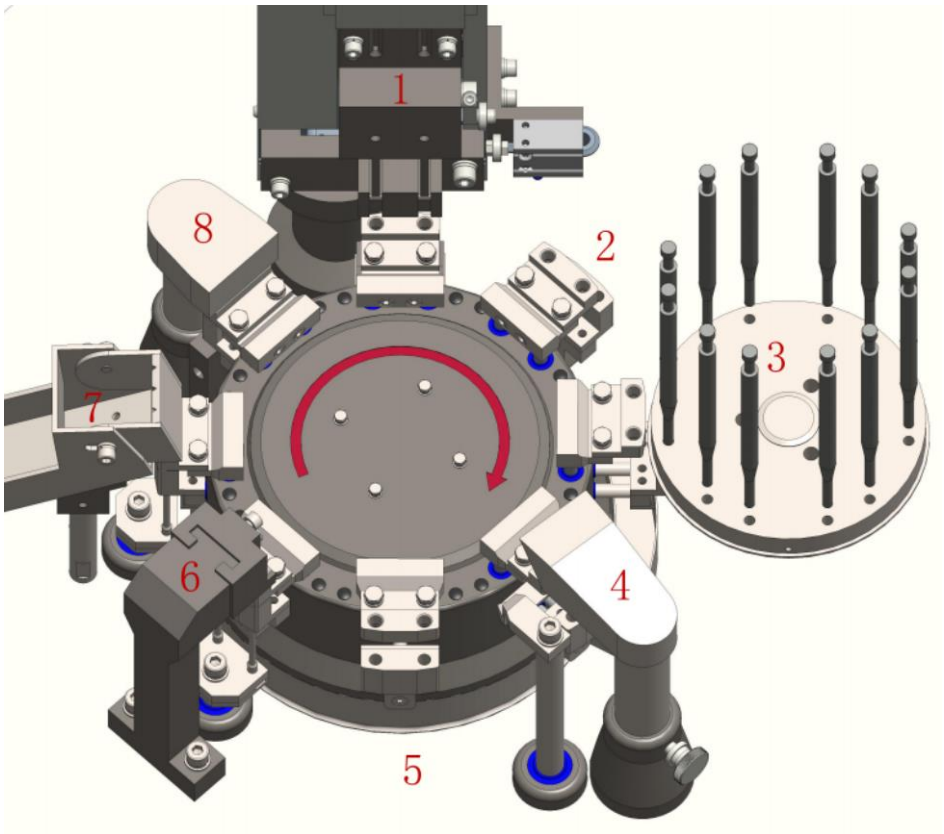

Fig 2 Transmission route of capsules

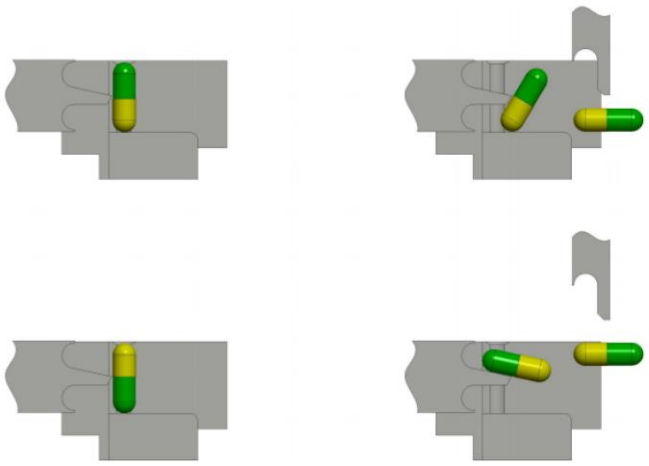

Fig 3 Process of turning around capsules

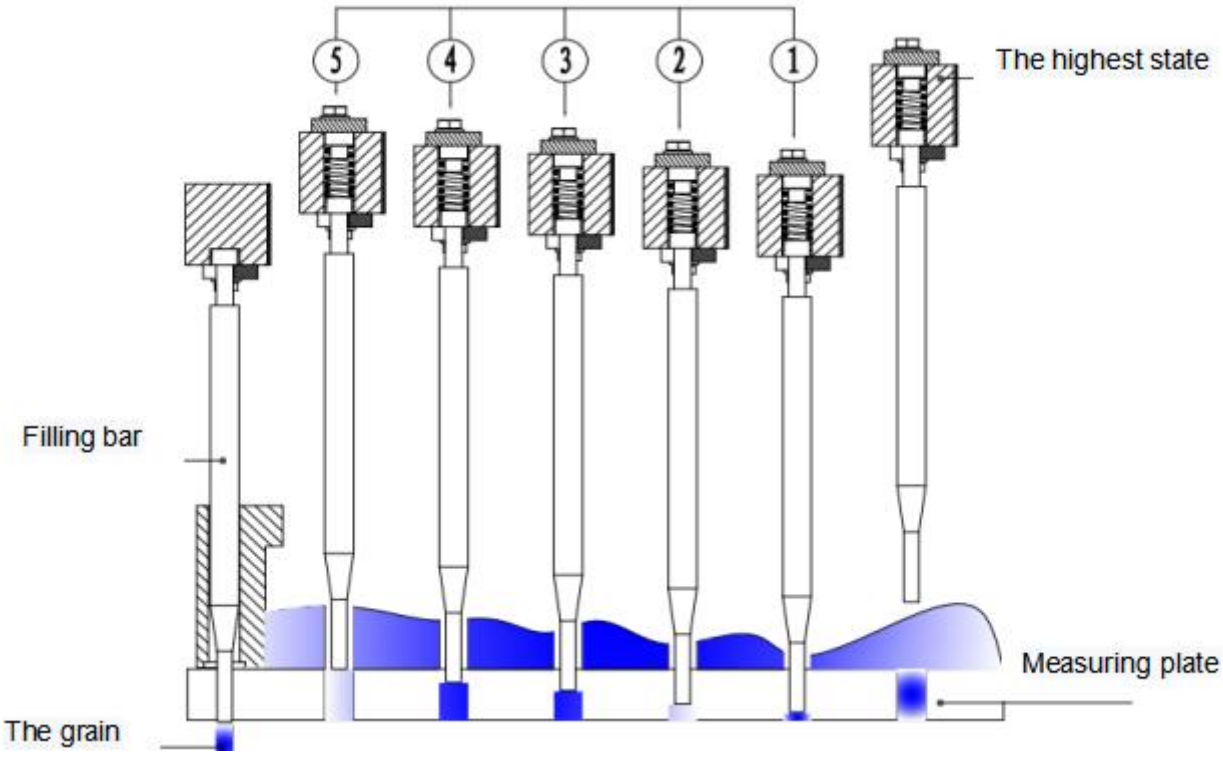

Fig 4 Processing grain preparation and filling

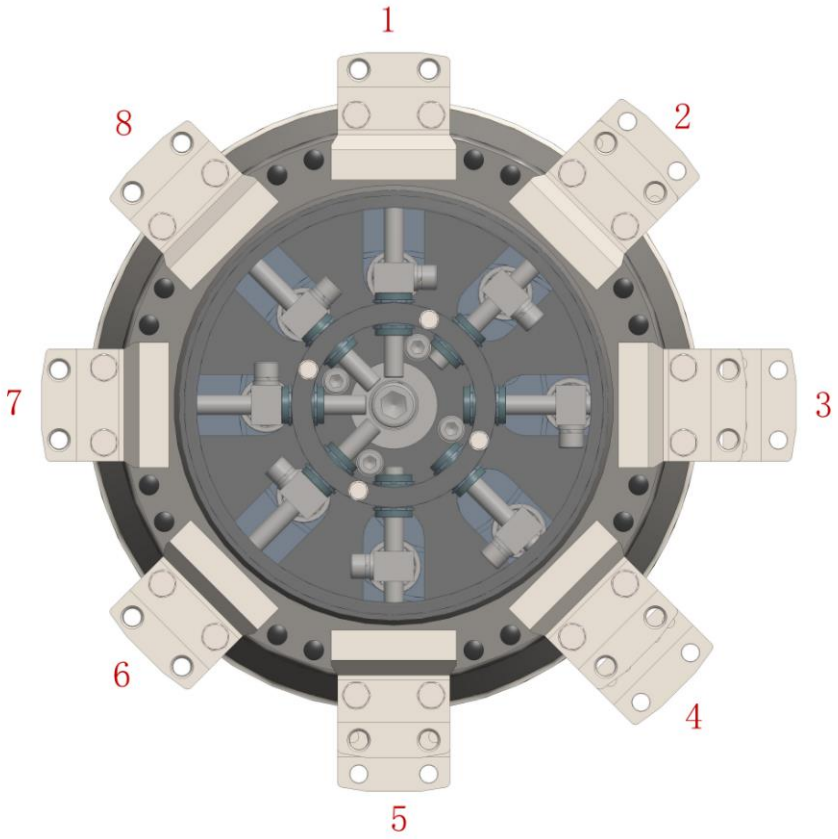

Fig 5 Revolving platform

5.1 Methods to change modules:

Upper module, lower module, horizontal fork, vertical fork, correction block, filling rod and dose plate should all be changed in order to replace the regulations for filling capsules

5.1.1 Method to change upper and lower modules(See Fig 6).

Loosen the cover plate and bolt of revolving table. Take down the upper cover. Loosen the fixated bolts of upper and lower modules. Next, replace with the lower module of another specification. Align the two location holes with two pins of the T-shaped axis. Fixate the bolts and install the modules. The concentricity for each

pair of modules should be rectified in Station 6. insert the adjustment rods into the right and left holes, so as to rectify the concentricity of each modules. Besides, fixate the bolts, so that adjustment rods can rotate flexibly in upper and lower module holes.

Special attention during operation: Rotate the handle of machine to replace the modules. Take out the adjustment rod before rotation!

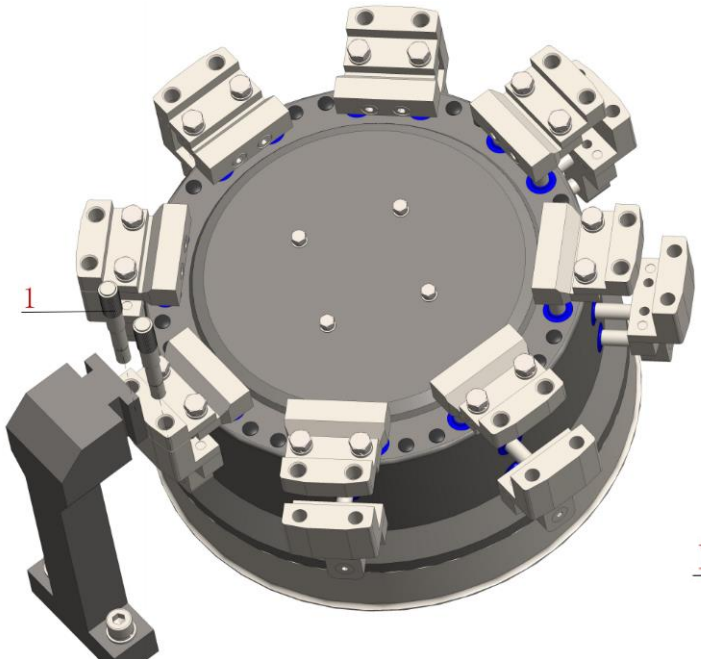

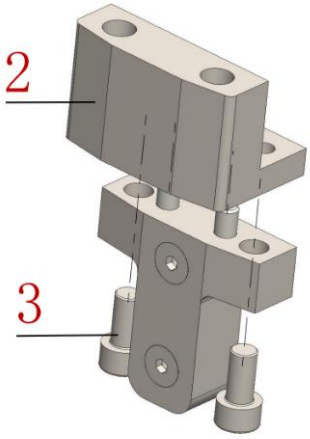

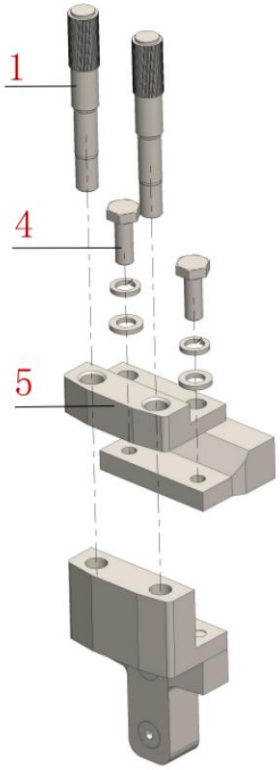

1.Adjustment rod 2.Lower module 3.Fixated bolt

4.Fixated bolt 5.Upper module

Fig 6. Centering adjustment of modules

5.1.2 Change the spare parts for transferring capsules

(1) Disassemble

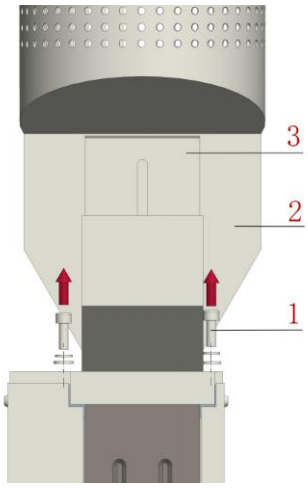

1.Fixated bolt 2.Capsule funnel

3.Capsule baffle

Loosen the two fixated bolts of capsules, and take down bolts and funnels

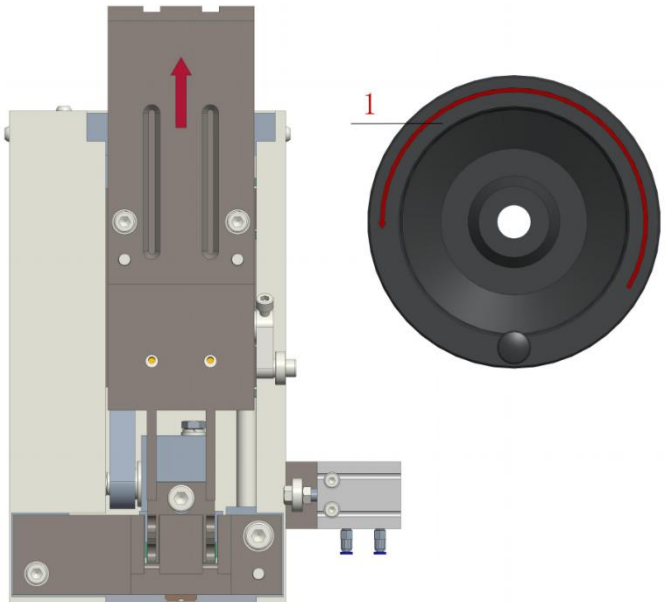

1.Hand wheel

Rotate the primary motor shaft. Convey the capsule board to the highest position

Unscrew the two fixated bolts and take down the capsule boards

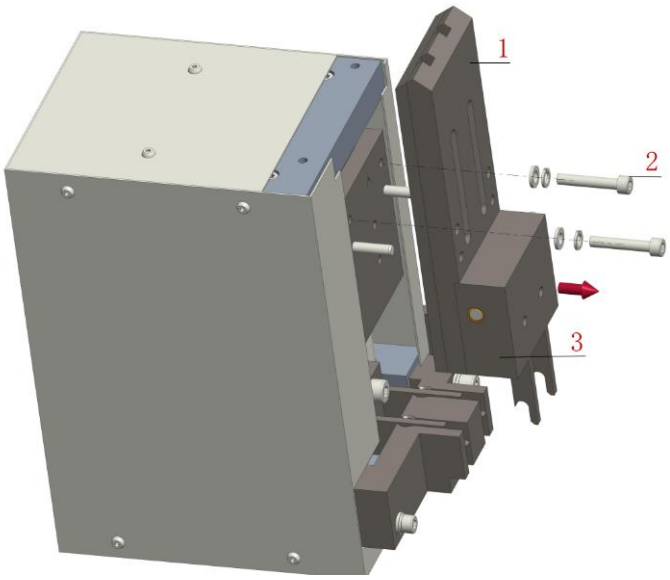

1.Capsule board

2.Fixated bolt

3.Vertical fork

d. Unscrew the bolts of horizontal fork and take the fork off.

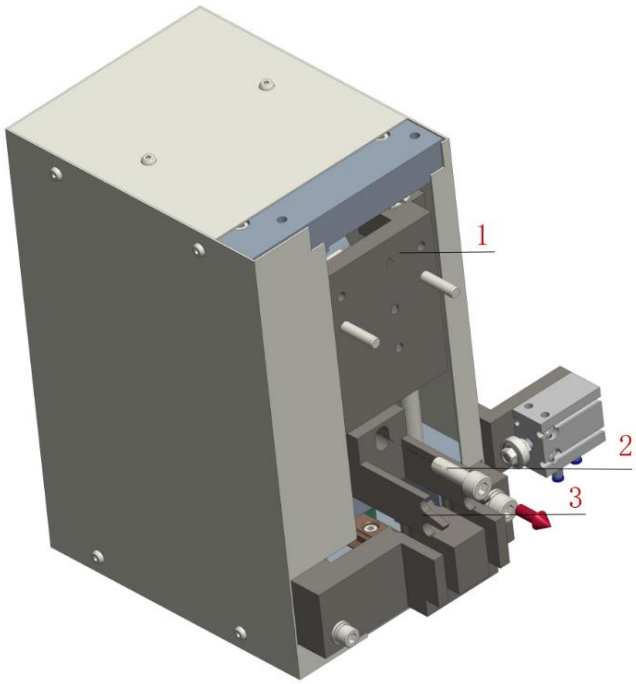

1.Sliding block

2.Fixated bolt

3.Horizontal fork

Loosen the three fastening screws on correction block and take the block off.

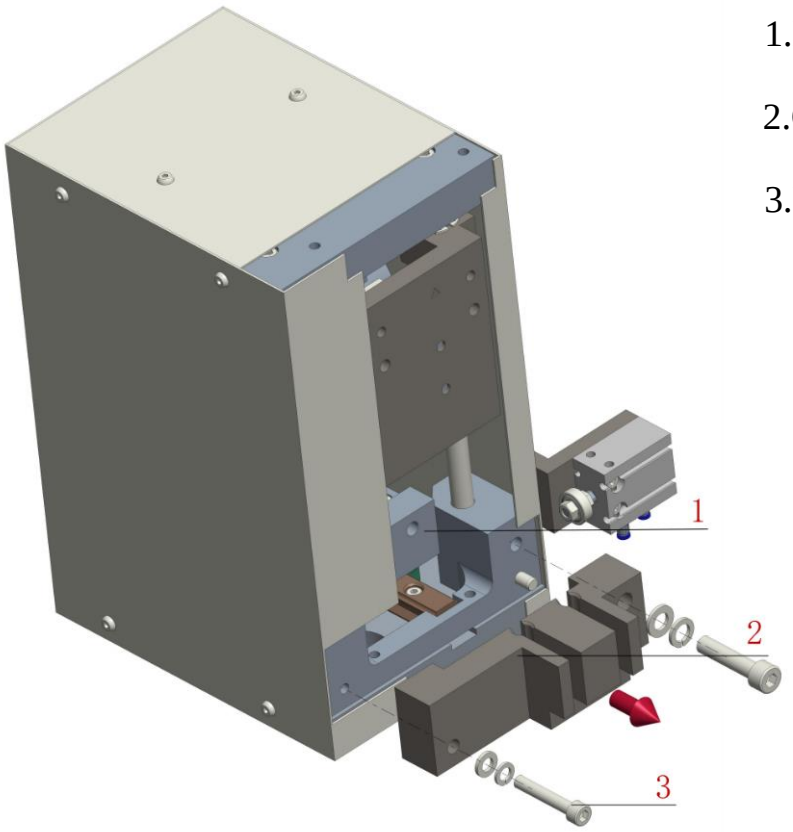

1.Horizontal board

2.Correction block

3.Fixated bolt

Align the two holes of the correction block with the locating holes on casing pins and screw up the bolts；

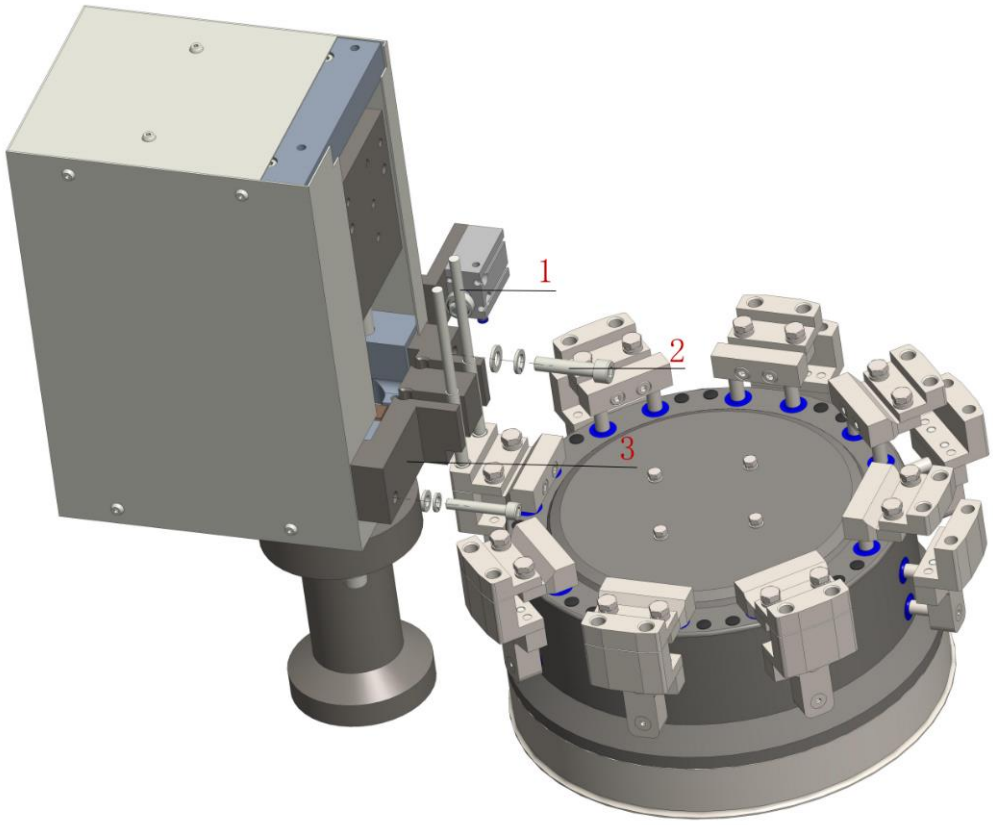

1.Adjustment rod 2.Fixated bolt 3.Correction block

Align the long groove of horizontal fork with the convex groove of the skateboard. After the alignment, convey the capsules to the optimum position and screw up the bolts(In general, the horizontal fork transfers the capsules to the external end of correction block)

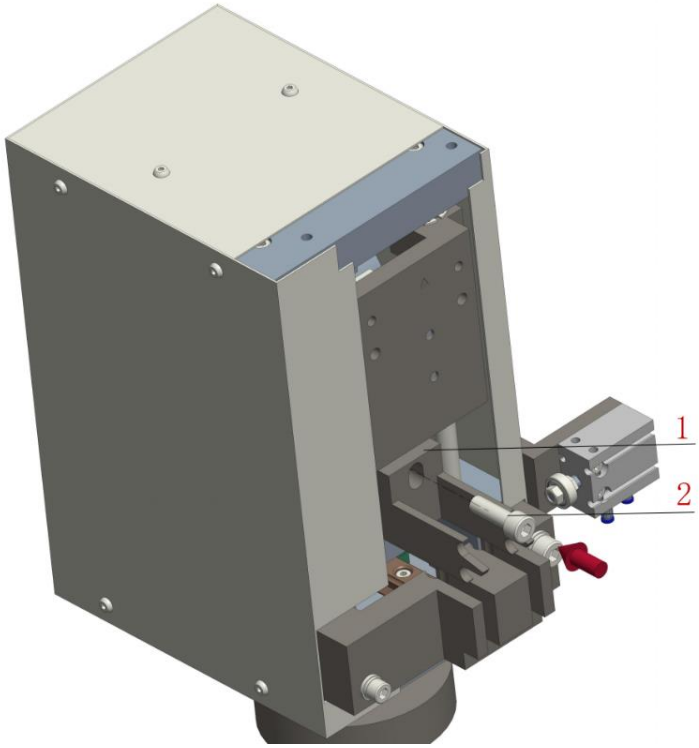

1.Horizontal fork

2.Fixated bolt

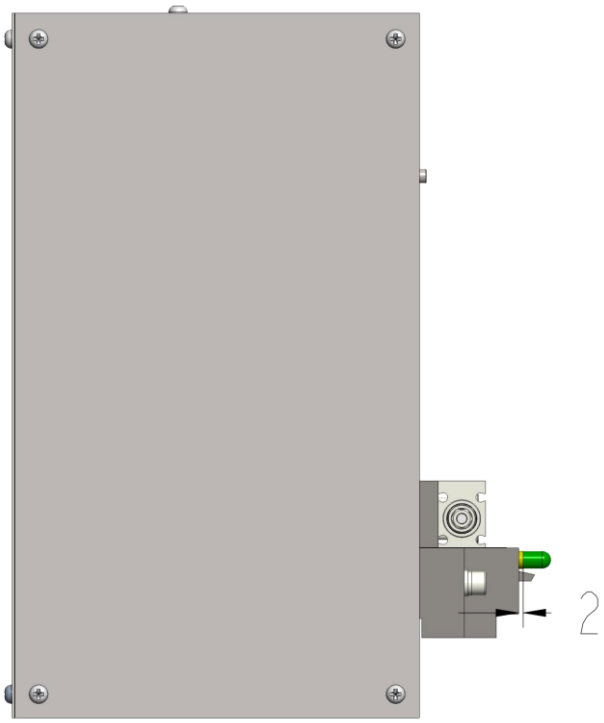

Align the two holes of capsule board and backboard with the holes in the skateboard. Then, screw up the bolts

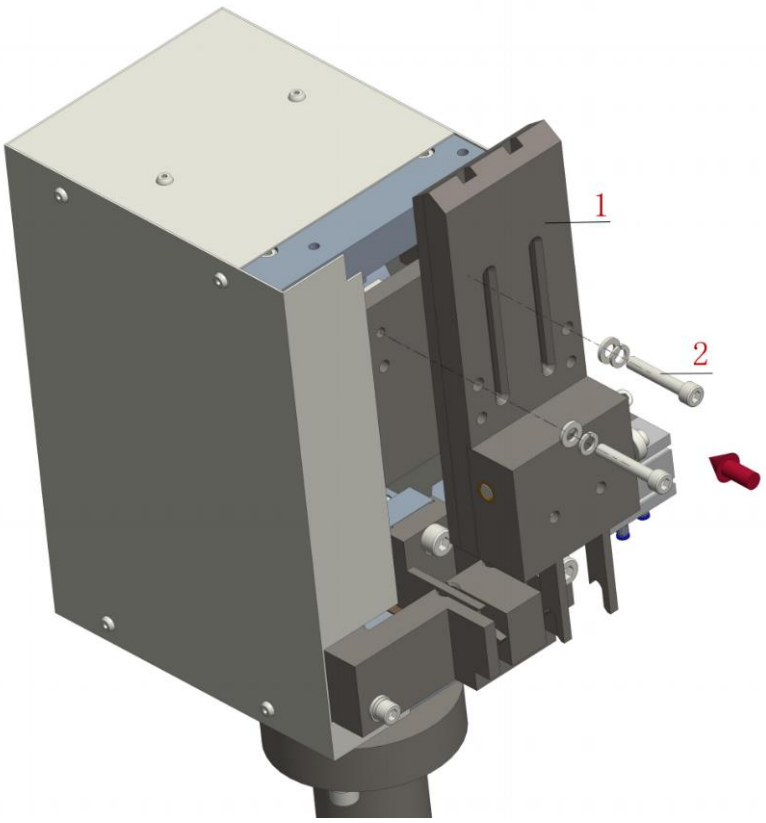

1.Capsule board

2.Fixated bolt

Install the capsule funnel and screw up the bolts(Make sure gaps are well-proportioned along the groove and capsule board)

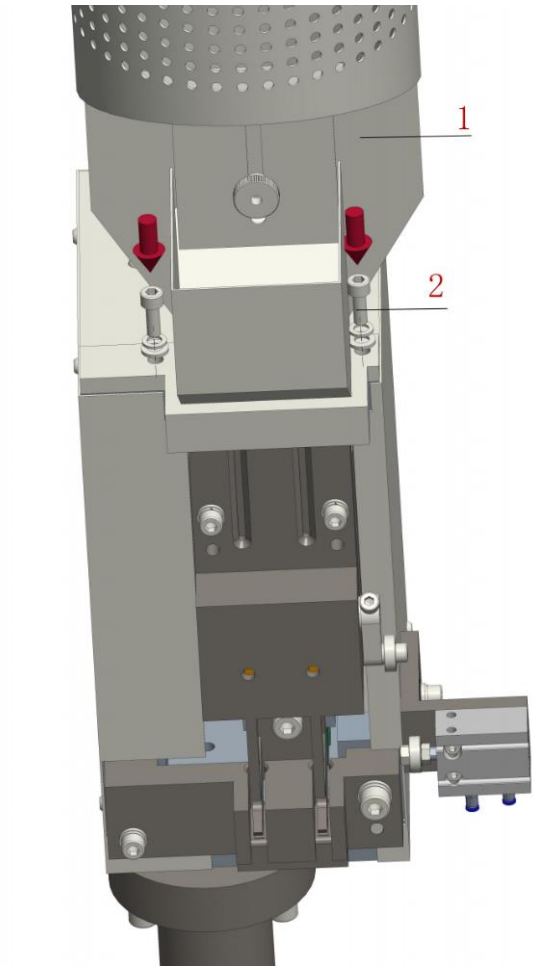

1.Capsule funnel

2.Fixated bolt

E After capsule parts are replaced, put empty capsules in the funnels. Activate the vacuum pump. Rotate the handle of the device. Make sure the capsule separation and transfer are normal

5.1.3 Change dose plate and filling rod(See Fig 9, 10 and 11)

Loosen the clamp and remove the steel pipe(See Fig 9)

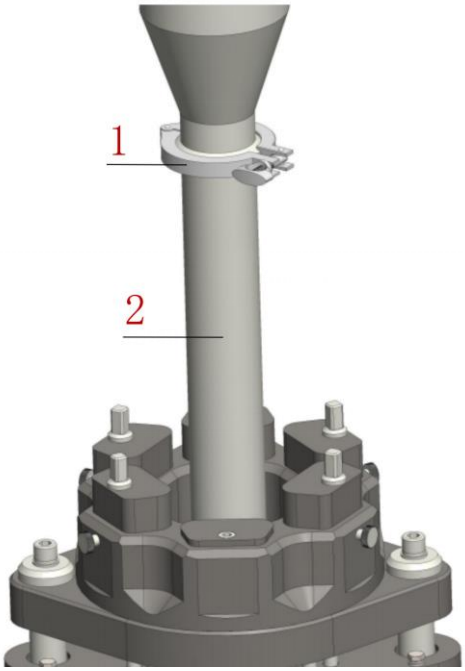

Absorb the remaining powder with the dust collector.

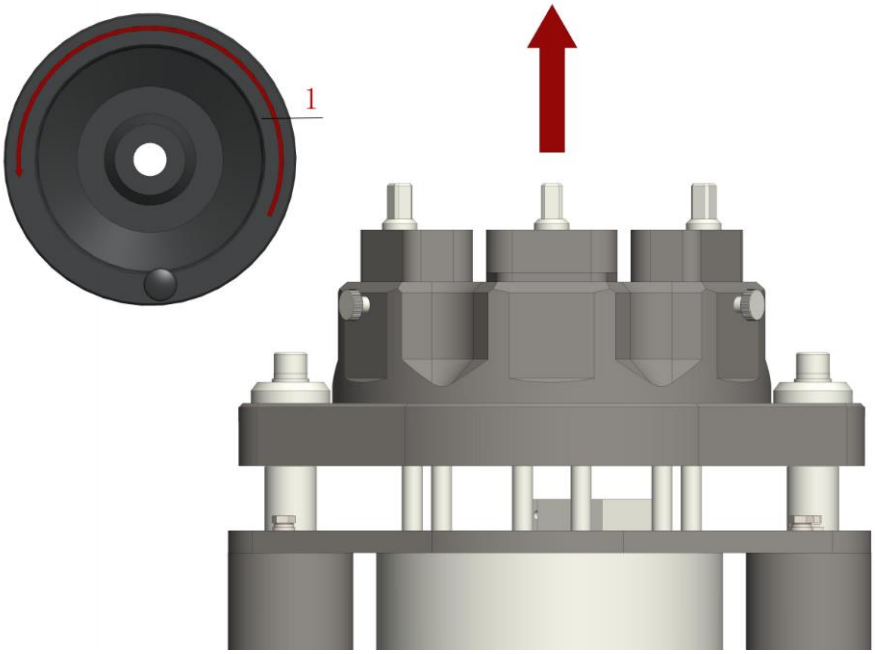

Rotate the primary motor shaft and send the filling rod to the highest position

Unscrew the acorn nut off. Rotate the knob in clockwise direction(See Fig 11). Take the pressing plate and filling holder off.

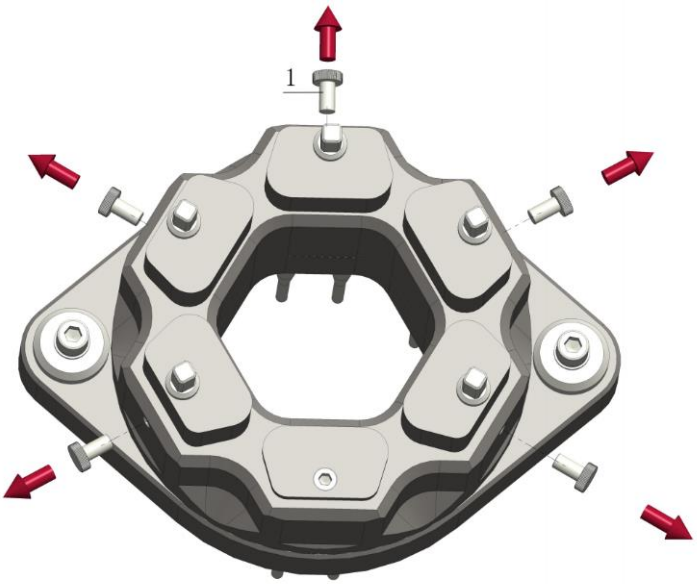

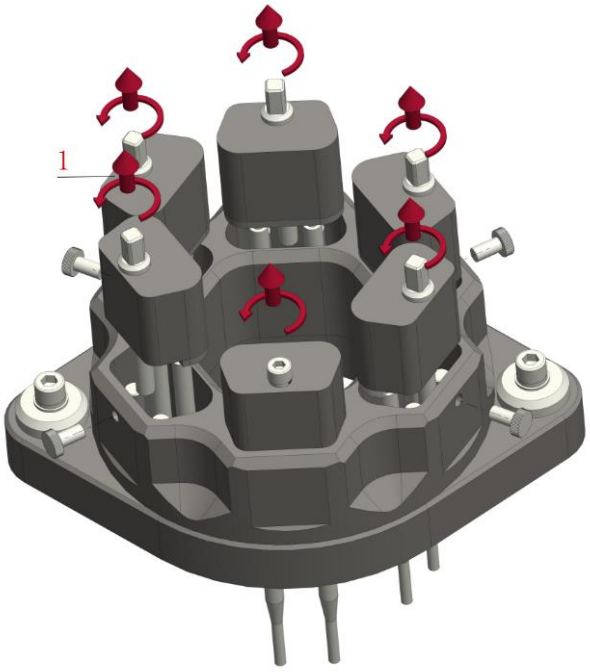

Discharge the bolt and pressing plate beneath the holder. Take off the filling rod. Then, install the pressing board and fixate the bolt.

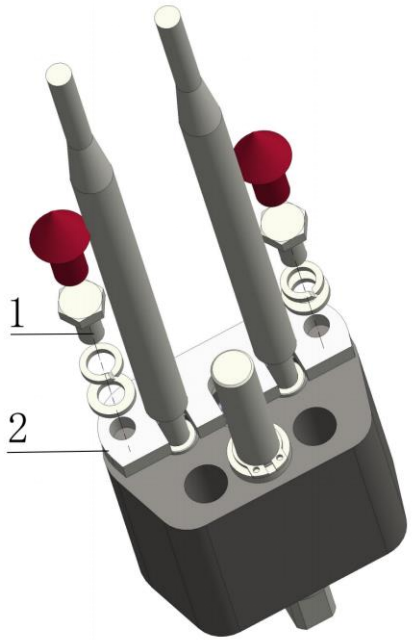

Level up the sideboard. Rotate the main motor with the handle. Loosen the four tightening screws of powder cup. Slowly take the powder cup and cover plate out of the side. There is no need to discharge the filling rod.

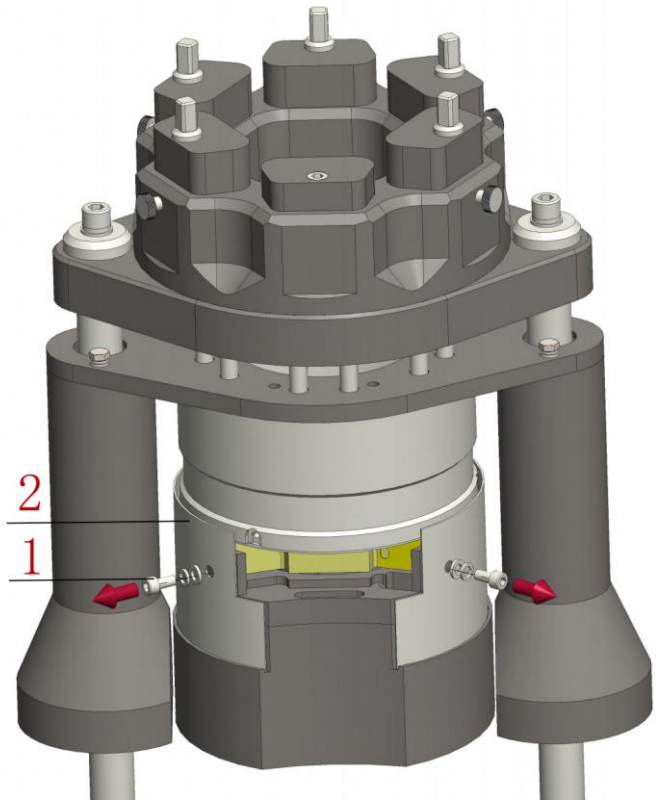
2
1

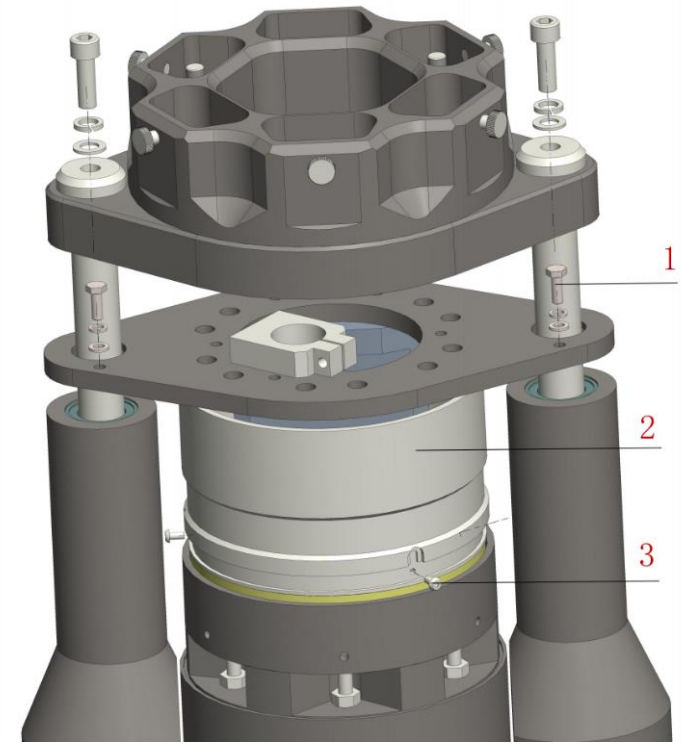
1
2
3

Discharge the bolts of three fixated dose plates with special wrench. Take the dose plate off.

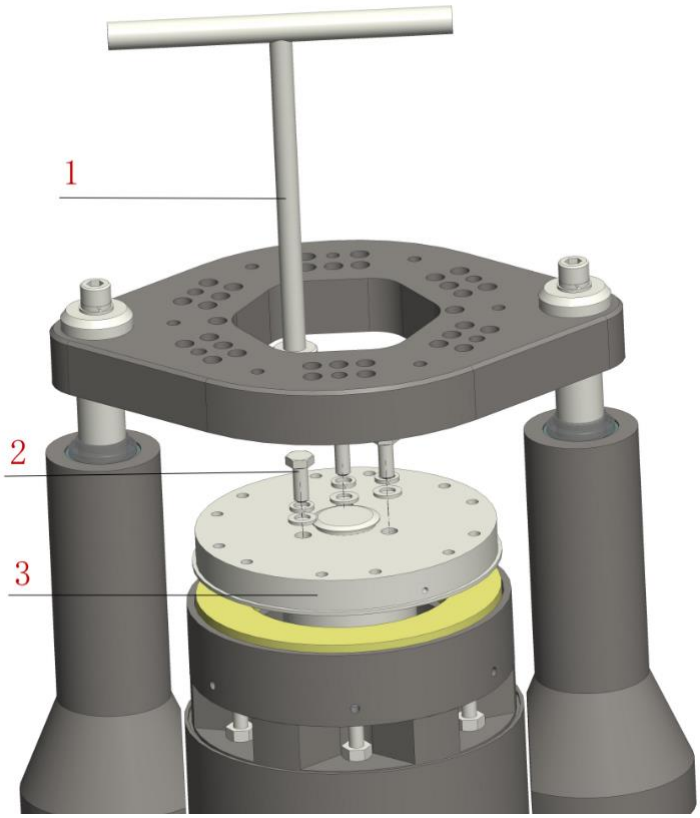

After cleaning the remaining powder in the bracket, install the dose plate with other specification. Do not screw up the three fixated bolts after installation.

Rotate the main motor with handle. Lower the punch bracket to the lowest point. At this moment, properly rotate the dose plate, so that the correction rod is insert into the holes. Then, carefully rotate three fixated bolts. If they can’t be insert into the holes,

they should be adjusted once again, until they are correctly insert into the holes.

Install the powder ring and cover plate from the other side. Screw up the four bolts of powder rings. If the replaced dose plate is thicker than original one, separation device should be adjusted upward.

Install the filling rod, holder and pressing board in original positions. Screw up the acorn nut.

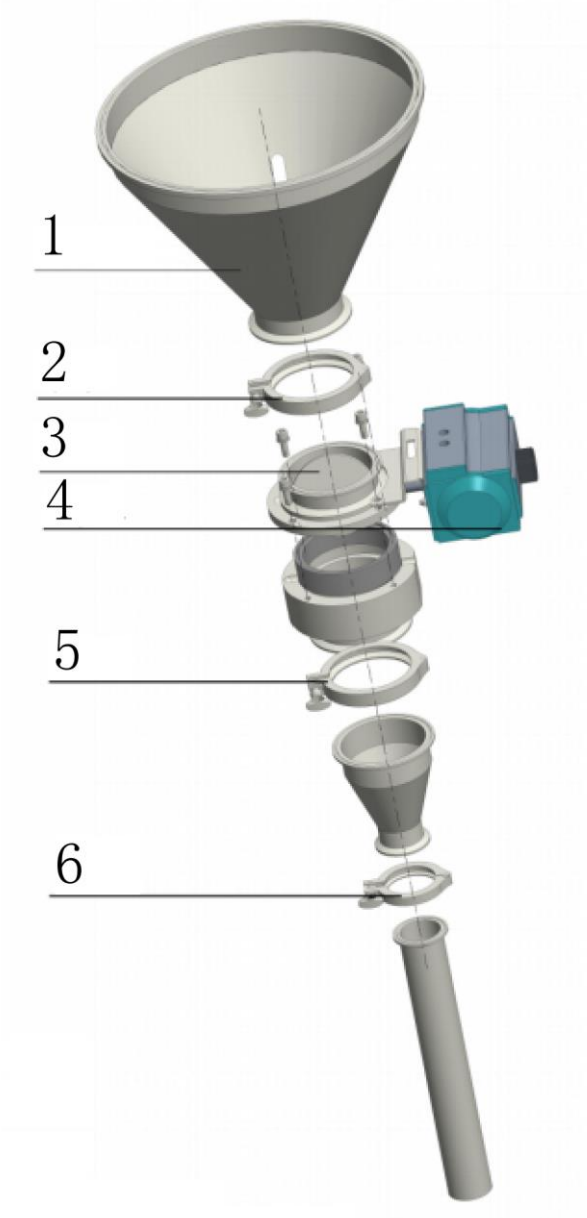

1. Material hopper

2.Clamp

3. Rotary valve

4. Cylinder

5. Clamp

6. Clamp

Fig 9 material supply device.

5.1.4 Adjustment after module replacement

After each module replacement, the device should be properly adjusted. Rotate the main motor for one or two cycles. In case of abnormal resistance, stop rotating right away. Find out malfunctions, resolve them until normal working conditions

5.2 Complete machine adjustment

5.2.1 Capsule funnel outlet adjustment(see Fig 12)

Capsule baffle on the funnel controls the height of capsule outlet. Loosen the fixated button and pull the baffle to change the height. According to experiences, the standard is that the height of outlet is 1/2 for the overall height of capsule,

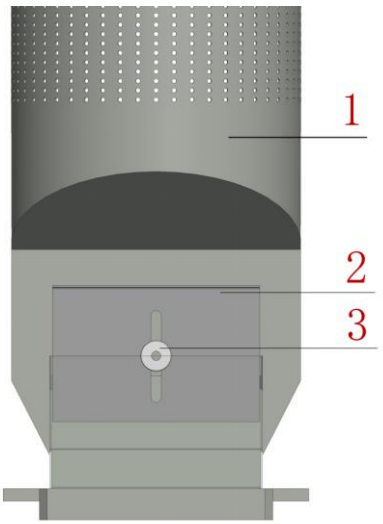

1.Capsule funnel

2.Capsule baffle

3.Liquefied nut

Fig 12

5.2.2 Adjustment of capsule buckling device(Fig 13 and 14)

Opening and closing gap of capsule buckling board is based on the time for each grain of capsule ejected from the board. Adjustment method is: Loosen the tightening screws of stop block. Move the stop block according to the above requirements.

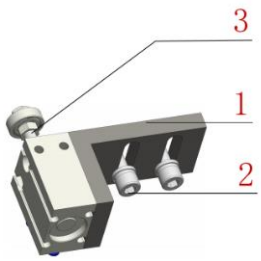

1.Stop block 2.Fixated bolt 3.push rod

Fig 13 Stop block

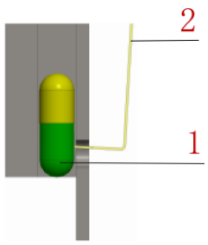

1.Capsule 2.Capsule buckling reed

Fig 14 Capsule buckling device

5.2.3 Adjustment of vacuum separator(See Fig 15)

The position of vacuum separator is set when it leaves the factory. If adjustment is needed, rotate the main motor handle to elevate the vacuum separator to the highest position. Loosen the fixated bolts on both ends of adjustment rod(left and right screw threads). rotate the adjustment rod to control the height of vacuum separator(the gap between upper layer of separator and lower layer of module). Screw up the bolt after adjustment. Check it for several time until it is properly locked up.

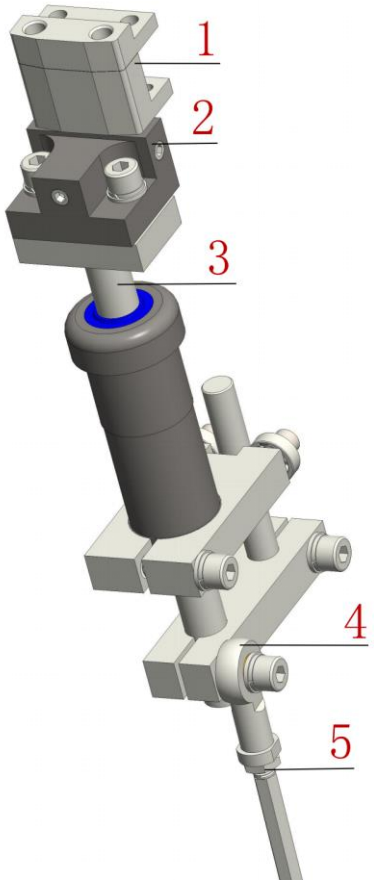

1.Lower module

2.Vacuum separator

3.T-shaped capsule axis

4.Knuckle bearing

5.Lockup nut

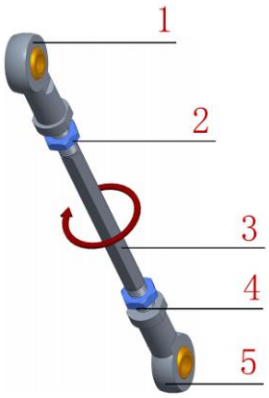

1.Knuckle bearing

2.Lockup nut

3.Adjustment rod

4.Lockup nut 5.Knuckle bearing

Fig 15. Adjustment of vacuum separator

Gap between dose plate and sealing ring is 0.03～0.08mm. Excessively small gaps increase resistance between dose plate and sealing ring. At this moment, the gaps should be reduced in the case of powder leakage or increasing resistance. The method of adjustment is: Loosen the fixated screws of the regulation bracket. Rotate the knob in anticlockwise direction.. Lower the sealing ring. Rotate the knob in clockwise directions. Measure the gaps between sealing ring and dose plate. Screw up the fixated bolt. If sealing ring is set at high level, rotate the knob in anticlockwise directions to lower it. Then, rotate the knob in clockwise directions. In other words, it can not be directly adjusted from high to low positions. There are scales on the rotation knob. For each scale, sealing ring is elevated and lowered by 0.015mm. After regulating the gasp between dose plate and sealing ring, insert the sideboard on the pallet.

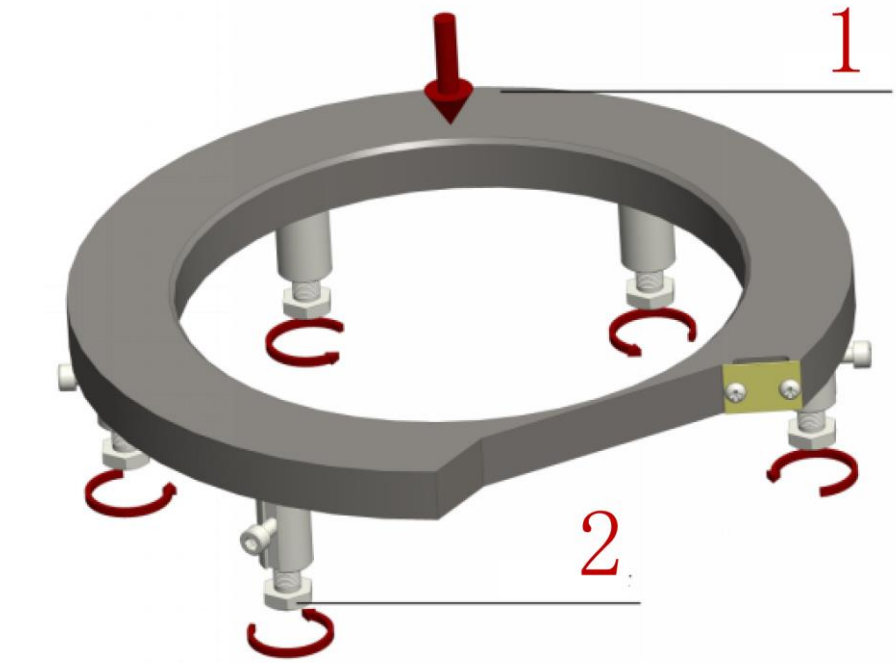
1
2

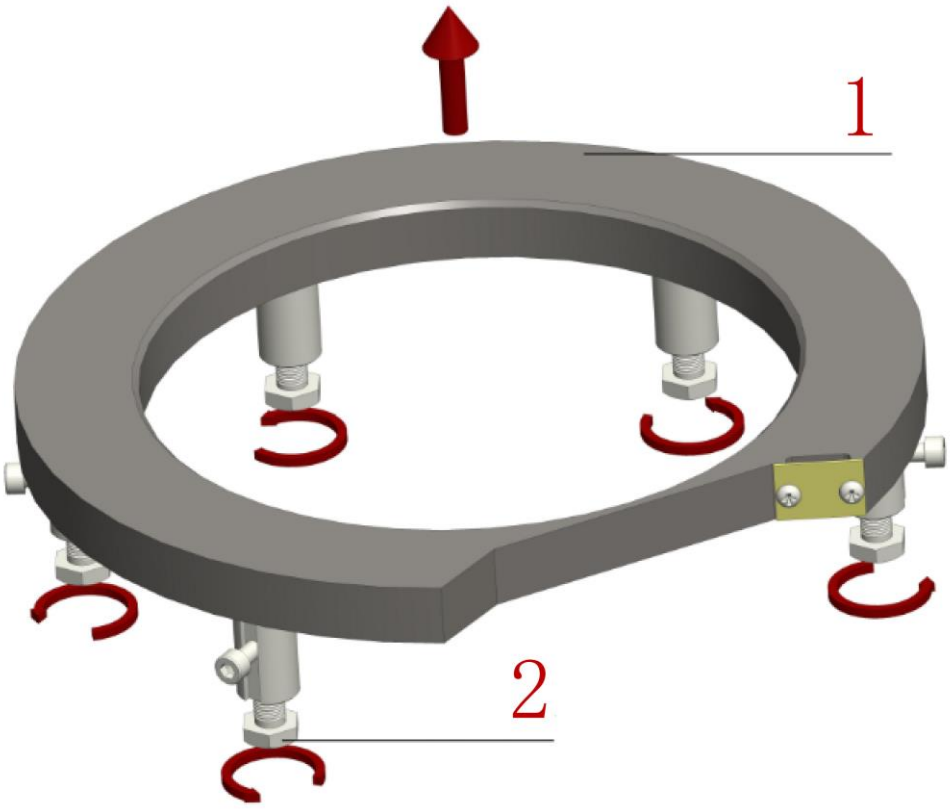
1
2

0.03-0.08mm

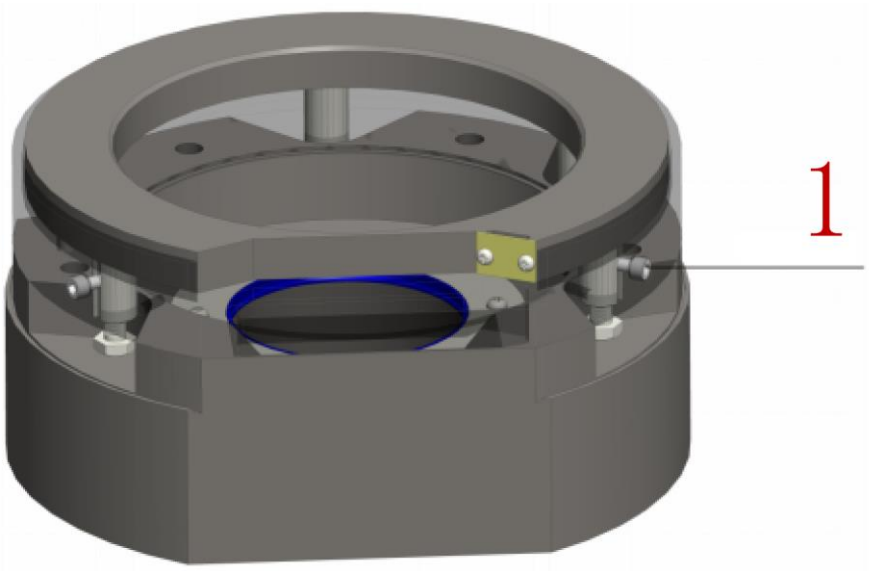
1

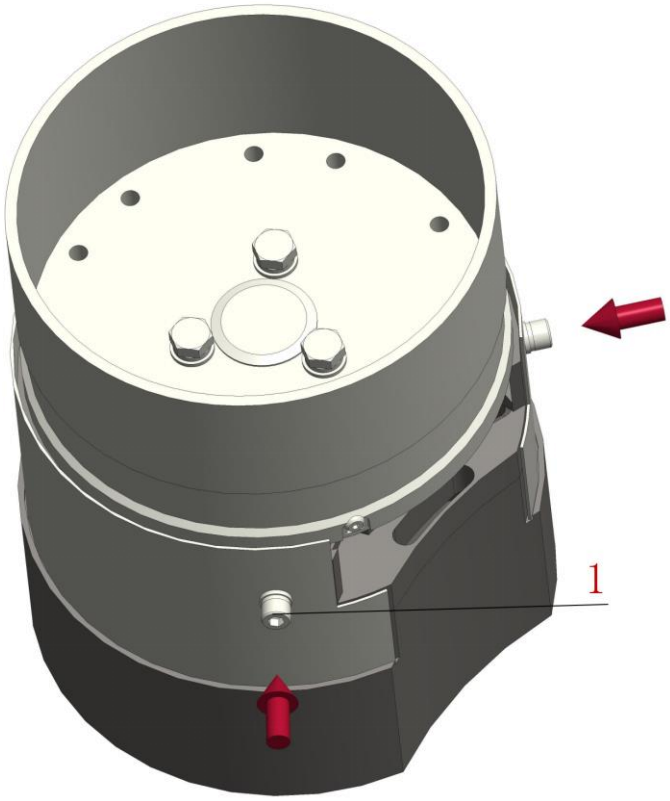

Fig 16 Structure of dose plate and sealing ring

5.2.6 Adjust gaps between powder separator(See Fig 18)

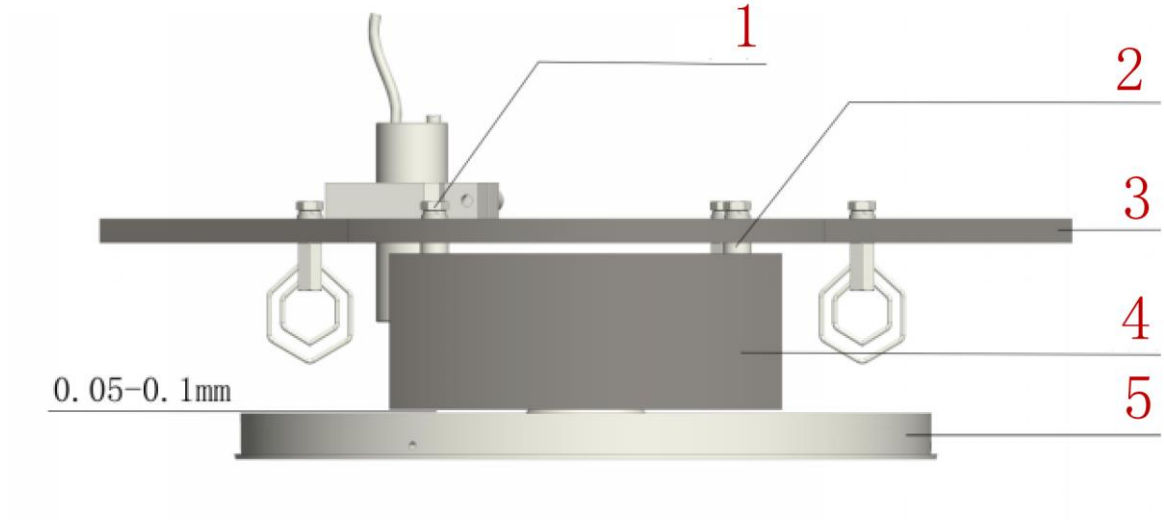

Fig 18 Gap between powder separator and dose plate

5.2.7 Adjustment of filling rod (See Fig.19, 20 and 21).

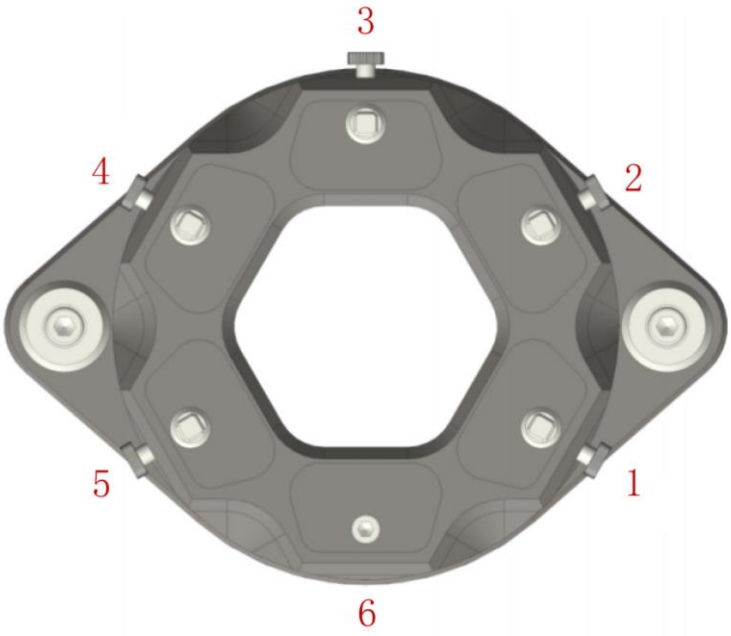

Six stations in the filling device

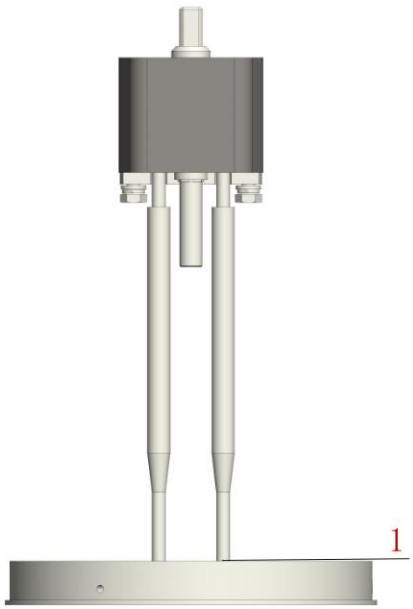

The first station should be horizontal with the plane on the measuring disk

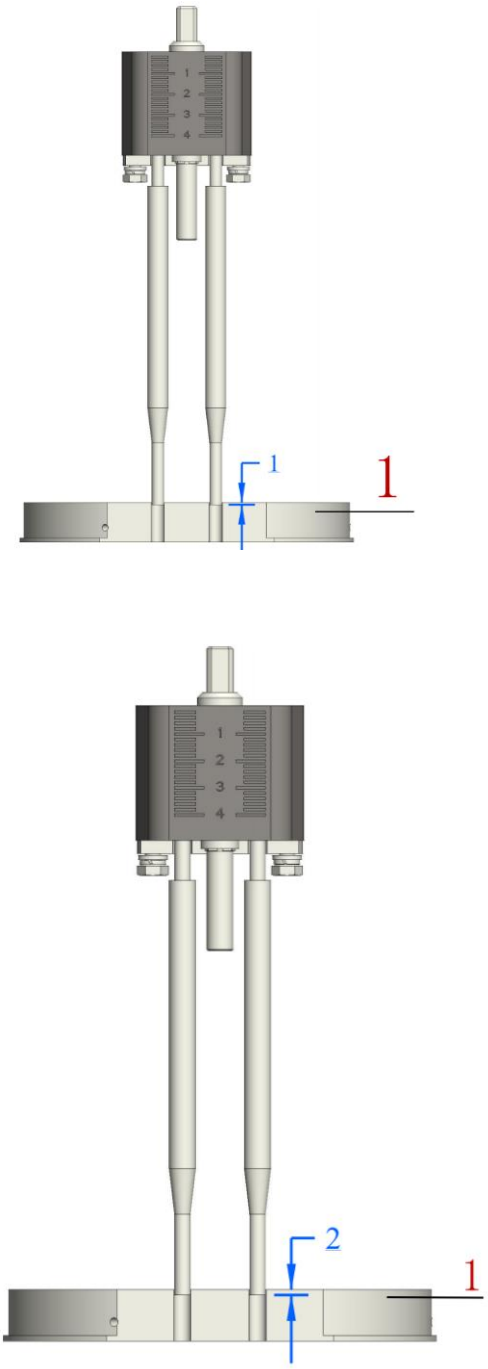

1
2
3
4
3
1

1
2
3
4
4
1

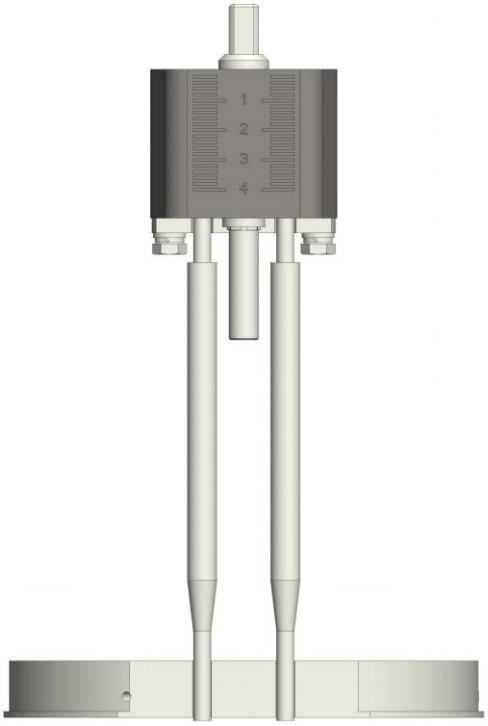

The method of adjustment: first release the fastening nut on the adjusting screw, rotate the knob on the screw counterclockwise to make the filling rod rise, and then rotate the knob smoothly clockwise so that it can be fastened to the desired height, that is to say, it can only be fastened after adjusting from high to low.

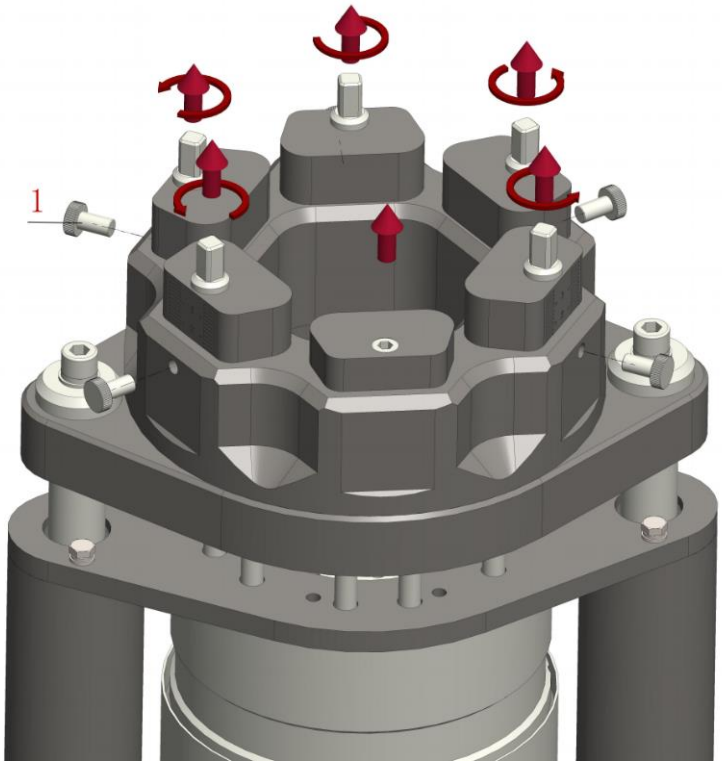
1

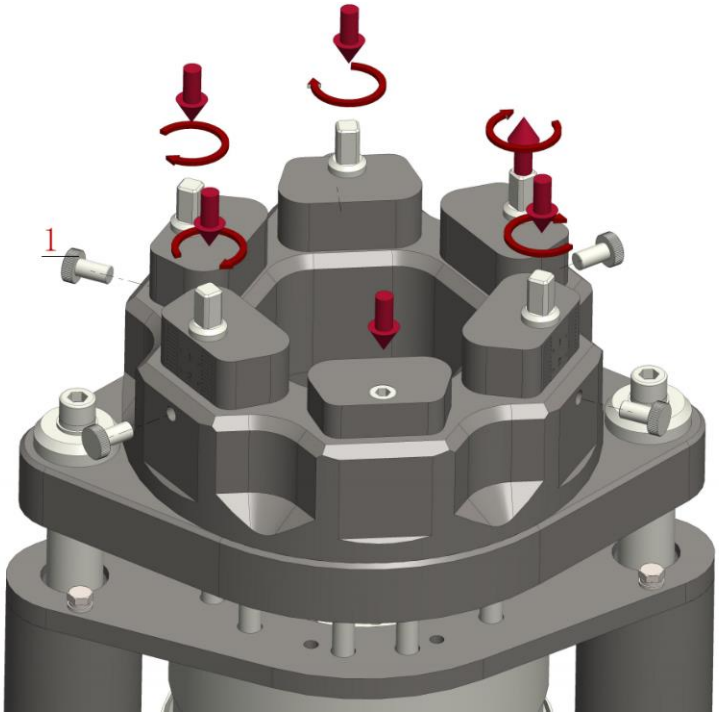
1

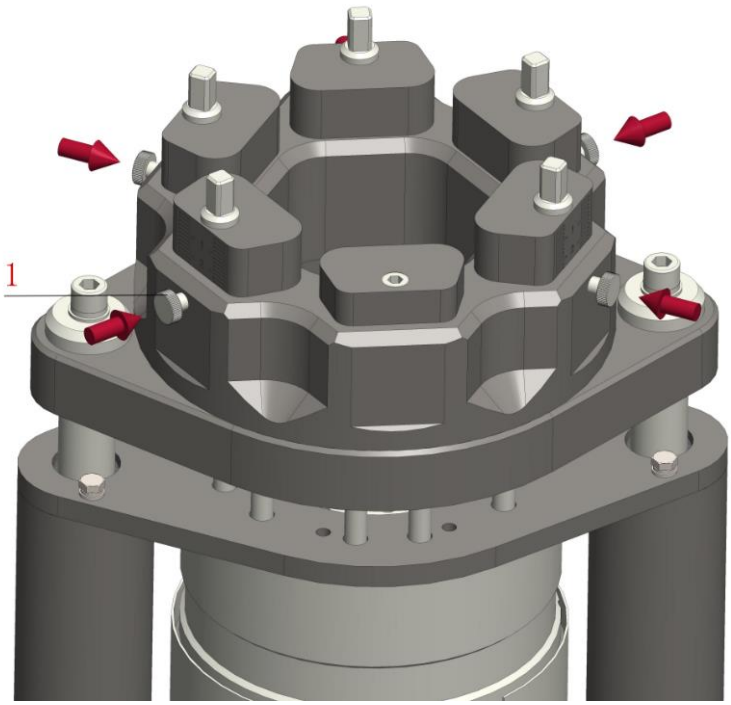

Fig 21 Height adjustment of filling rod

5.2.8 Adjustment of powder sensor(See Fig 22)

Capacitance-type sensor controls the height of powder cup. Signal from the sensor activates and halts the feeding device. Therefore, the height of sensor can also determine the height of the powder pool. According to the mobility of filling powder and capsule specification, proper height adjustment of the sensor can accurately decide the filling amount. The adjustment method is: Loosen the fixated bolt on the senor to change the height of sensor. Afterwards, screw up the bolt. The bolt above the senor can adjust its sensitivity. The proper distance between the sensor and powder is between 2 and 8mm。

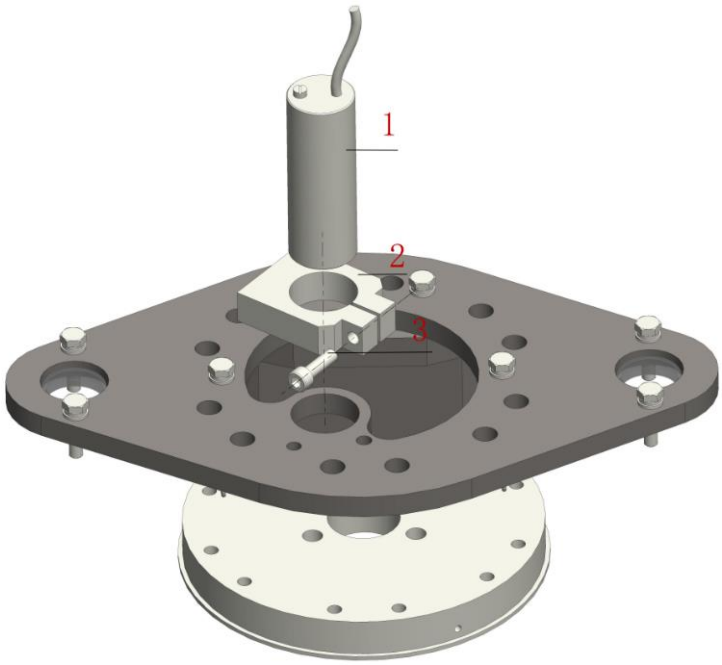

Fig 22. Height adjustment of powder sensor

5.2.9 Adjustment of eliminating defective capsule(See Fig 23 and 24)

In Station 6, the push rod and suction port can eliminate the unseparated or other defective capsules. The height of suction port and push rod can be adjusted. To change the capsule specifications, this section should also be properly adjusted. The method to adjust the height of suction port is: Loosen the fixated top thread, adjust the height of suction port and then screw up the top thread. The suction port can’t be excessively low. If it is too low, it may suck the open capsule from the module hole.

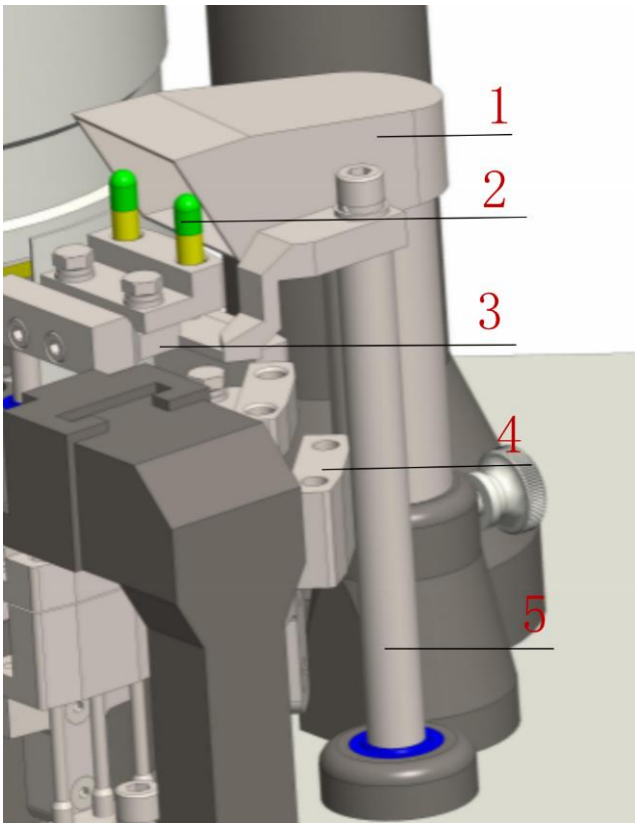

1.Suction port

2.Capsule

3.Upper module

4.Lower module

5.Driving shaft

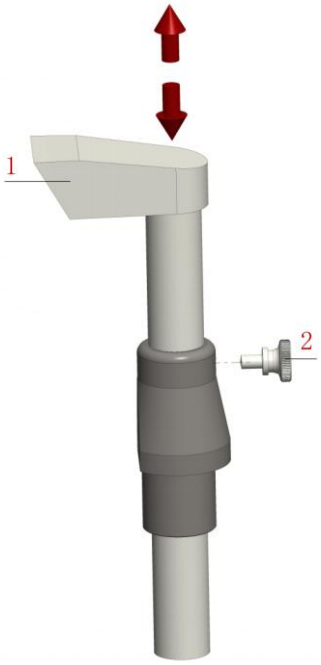

1.Suction port

2.Fixated top thread

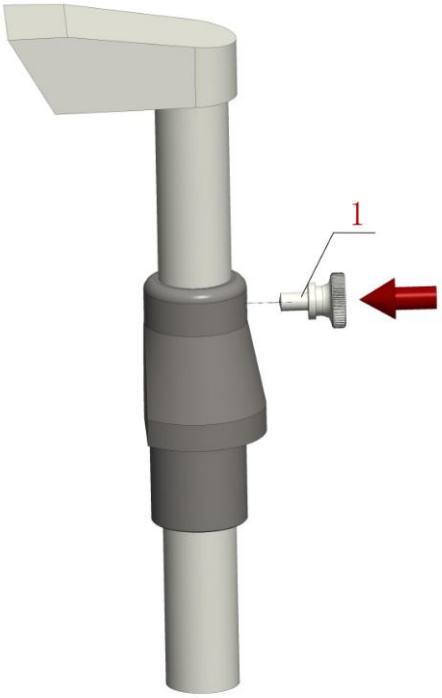

1.Fixated top thread

Fig 23　Device for eliminating defective capsule

The method to adjust height of push rod is: Under the work table,loosen the fixated nut on both ends of the knuckle bearing. Rotate the adjustment rod to change the height of push rod. Insert the unseparated capsule into the module hole at Station 6. Rotate the primary motor shaft to move the push rod, and observe whether it can eliminate the defective capsules. Then, firmly screw up the locknut. It is necessary not to touch the upper and lower modules when moving the push rod.

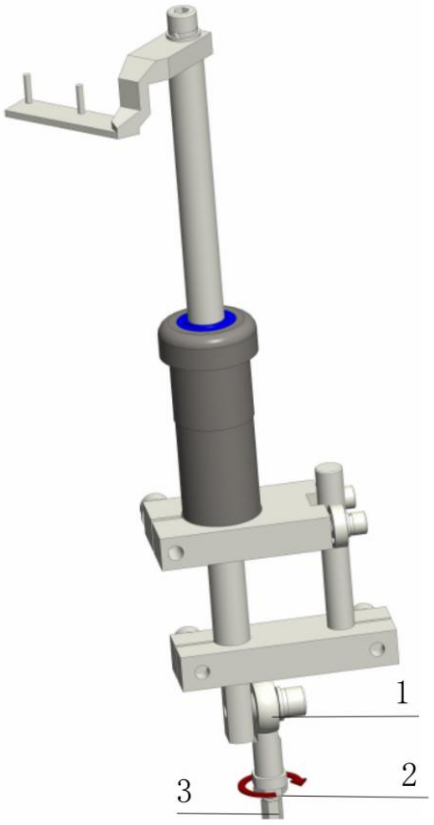

1. Knuckle bearing

2.Lockup nut

3.Adjustment rod

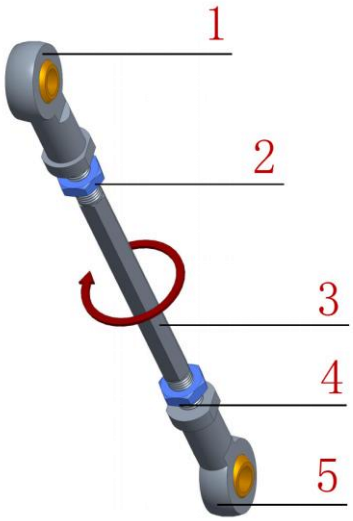

1.Knuckle bearing

2.Lockup nut

3.Adjustment rod

4.Lockup nut

5.Knuckle bearing

Fig 24 Driving mechanism of the elimination rod

5.2.10 Adjustment of capsule lockup(Fig 25, 26 and 27

According to different lengths and specifications of capsules, it is necessary to adjsut the overall capsule length after the lockup. The gap between lockup baffle and peak point of capsule in the module ranges from 2mm. The method to adjust the height of push rod is: Insert the closed capsule into the module. Adjust the length of the screw rod and tappet. When the push rod reaches to the highest position, the pin accurately aligns with the lower part of capsule. During the filling process, if capsules are too long or too short that they can not be tightly locked up, it is necessary to carefully readjust. After the readjustment, the lockup nut should be fixated.

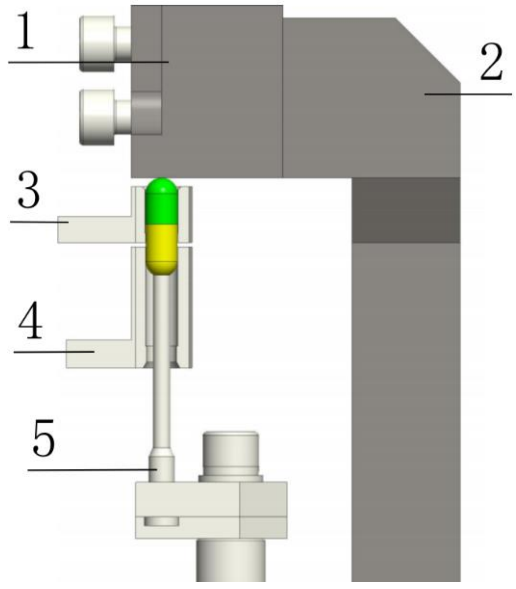

1.Capsule baffle

2. Capsule bracket

3.Upper module

4.Lower module

5.Push rod

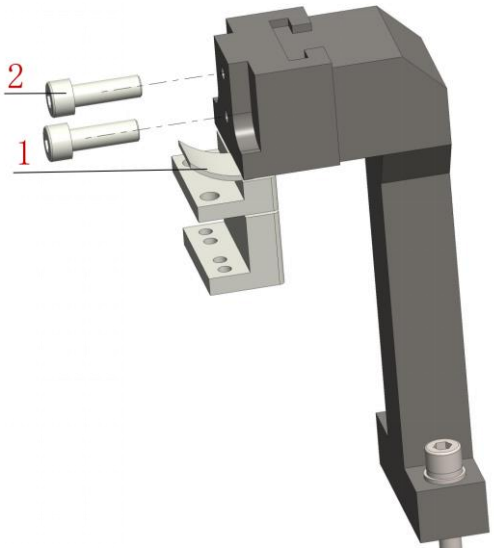

1.2mm 2.Fixated bolts

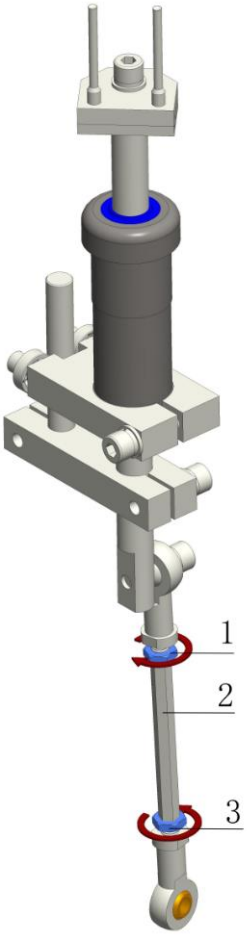

1.Lockup nut

2.Adjustment rod

3.Lockup nut

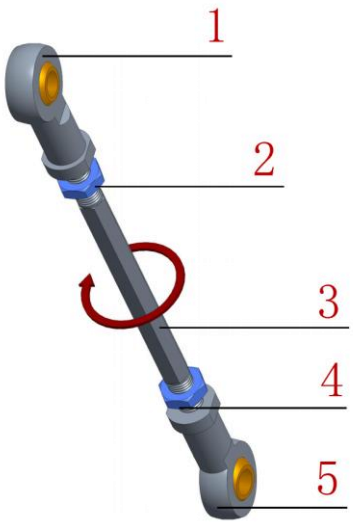

1.Knuckle bearing

2.Lockup nut

3.Adjustment rod

4.Lockup nut 5.Knuckle bearing

Fig 25 Capsule lockup mechanism

5.2.11 Adjustment of product output device(See Fig 28 and 29)

Adjustment of product output device includes the adjustment of guide plate and push rod. The guide slots are equally away from the module holes. Loosen the lockup nut on both ends of guide plate. Adjust the angle and height of guide plate. Align the guide slot with the capsules through the guide plate. Then, screw up the lockup nut.

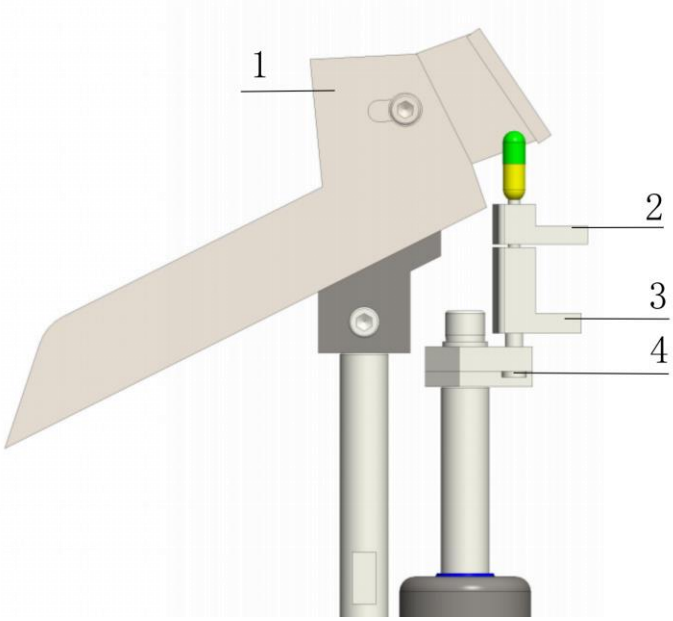

1.Product output plate

2.Upper module

3.Lower module

4.Push rod

Fig.28 Adjustment of product output device

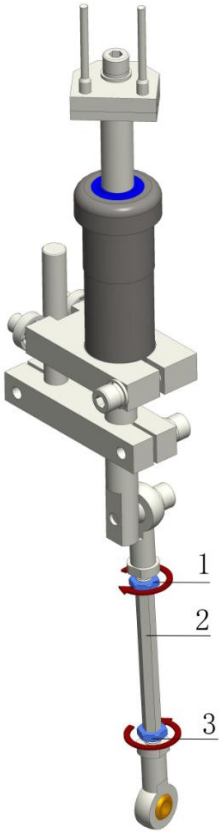

1.Lockup nut

2.Adjustment rod

3.Lockup nut

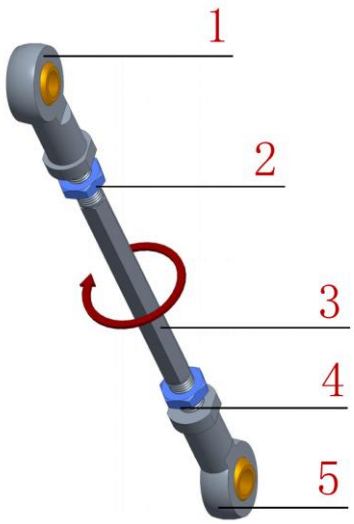

1.Knuckle bearing

2.Lockup nut

3.Adjustment rod

4.Lockup nut 5.Knuckle bearing

5.2.12 Adjustment of safety clutch(See Fig 30)

Safety clutch is installed on the primary motor reducing gear. It protects the motor in case of overload. In normal workload, the clutch should not slip. But after a long period of use, it may also slip. If it slips in normal workload, screw up the round nut of the clutch, so that the device can work normally again.

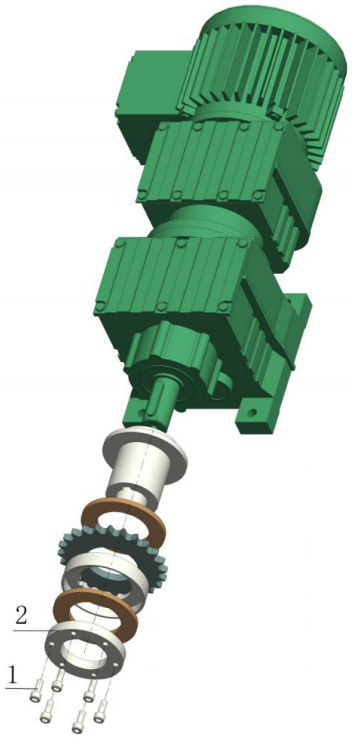

1.Fixated bolts

2. Nut nut

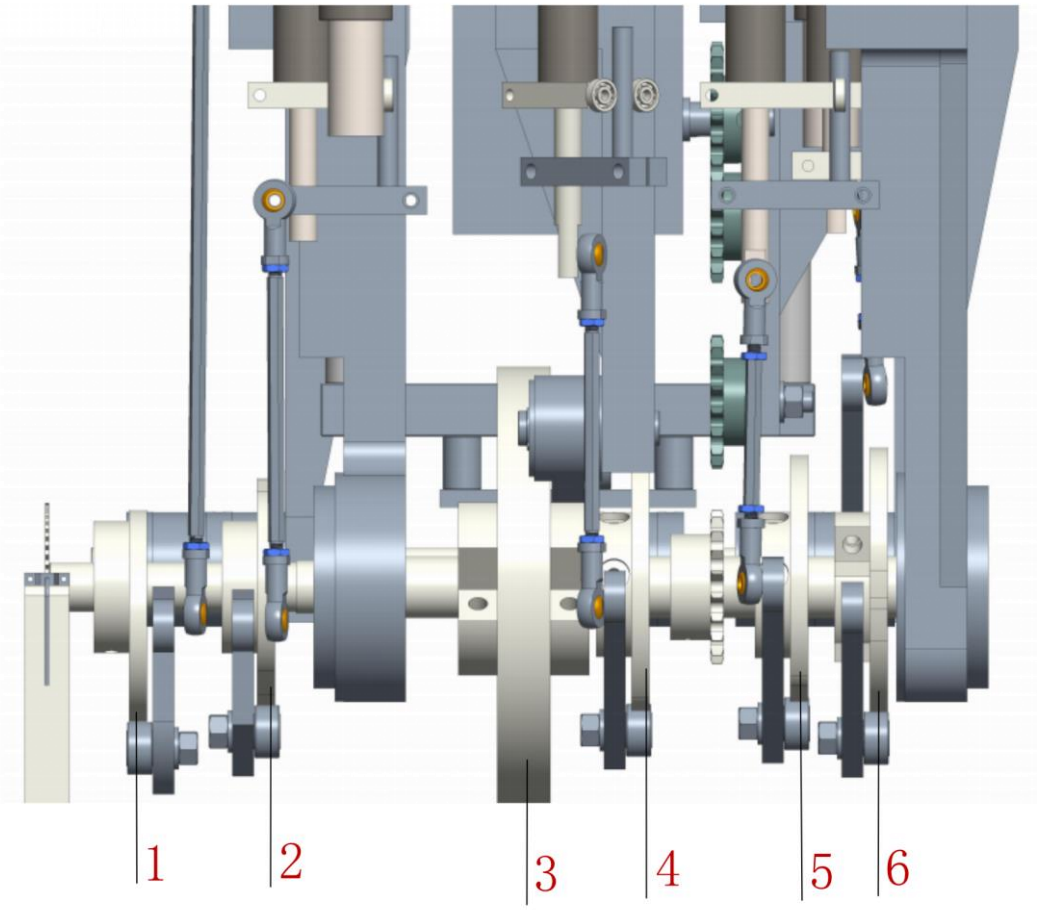

1.Capsule cam 2.Suction cam 3. Filling cam 4. Out capsule cam

5.Lockup capsule cam 6.Waste elimination cam

Fig 30 Transmission gear

When the chain gets loose, move the tightening wheel, but the chain can’t get off the chain wheel. It can’t be disconnected either, so that it doesn’t disturb the law of movement in the whole device.

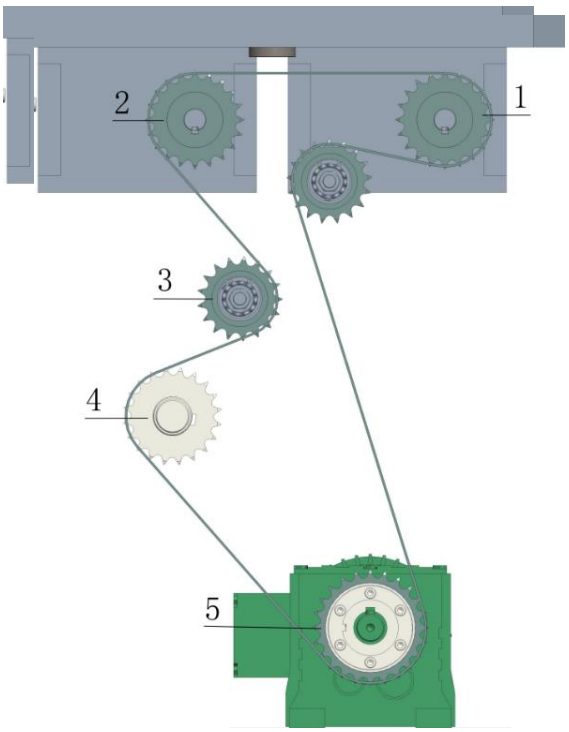

1.Division box of dose device 2.Turntable division box

3.Tensioning transmission chain 4.Main driving wheel

5.Speed reducer

Examine the chain on a weekly basis. Rewind and add lubricating grease if necessary.

5.2.15 Adjustment of vacuum degree(Fig 33)

Vacuum degree is shown in the vacuum gauge. The range of -0.02 to -0.06MPa is appropriate for opening capsules without damaging it. If the vacuum degree gets excessively high, adjust the control valve. If it gets excessively low, turn down or turn off the control valve.

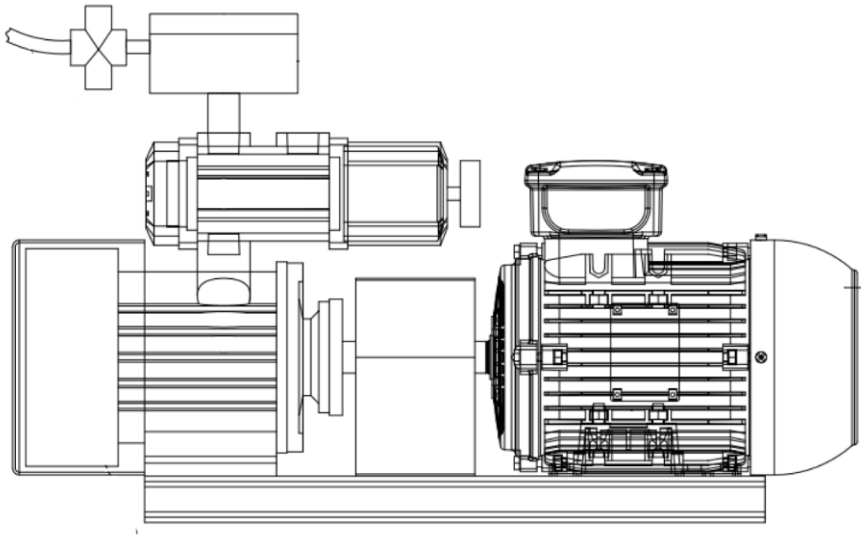

6. Activation and operation of machine

6. 1 Connect to general power

Before activating the machine, check the device and rotate the main motor shaft. Operate the machine for 1 to 3 cycles, and turn the battery main switch from “OFF” to “ON”

6.2 Status selection

Machine operation includes manual mode and automatic model. Manual mode is used in a test run. When debugging the machine, switch to manual mode. After the machine operates normally, turn the function switch to “automatic operation”. at this point, main motor and feeding motor are in automatic mode. The feeding motor is

controlled by the powder sensor

6.3 Machine operation

In the manual status, press the “vacuum pump working” button. The indicator lights up, vacuum pump and electric motor are activated. Electric motor and feeding motor are in the inching mode. For the automatic status, press the “vacuum pump working” button, and then the “main motor working” button. The machine starts to operates normally.

6.4 Emergency use

For immediate halt, press the emergency button to halt the machine right away. For restart, switch the button according to the arrow to activate self-locking emergency button. Then, press”vacuum pump working” and “main motor working” buttons. The machine starts operating again.

6.5 Usage of door control switch

Door control switches are installed on four edges of glass doors. If a door is open or not tightly closed, the buzzer gives out alarm. In automatic mode, the machine can not be activated. If four doors are closed, the machine can work normally

6.6 Automatic control of feeding

Dosage of medicine chamber is controlled by capacitance-type sensor. According to instructions in “5.2.8”, adjust the height of sensor. If drug material is lower than the preset height, it can automatically start the motor. If drug material

reaches the preset height, the feeding motor automatically stop activating the motor. When drug material is used up in the funnel(Fig 22), the machine automatically halts the main motor through incomplete filling and delaying.

7. Machine maintenance and cleaning

7.1 After the machine operates for a long period of time, regularly clean the spare parts that are in contact with drug powder. Cleaning is also needed for changing powder or not using the machine for long periods

7.2 Greasy dirt under the transmission parts should be cleaned frequently to observe the operation clearly.

7.3 Filter of the vacuum system should be opened regularly to clean up the dirt and sewage.(Fig 33)

7.4 Machine lubrication

working surface of roller wheels should be coated with lubricating grease weekly

Knuckle bearings of connecting rods should be coated with oil lubrication weekly.

The bearings should be cleaned with lubricating grease on a regular basis. Sealed bearings can be coated with oil lubrication.

Transmission chain should be checked and coated with lubricating oil weekly.

Oil amount of main transmission and feeding reducers should be checked

monthly. Lubricating oil should be replaced every half year.

Scale division boxes under the dose plate and turntables should be dismantled and maintained with the help of professionals

After the scale division boxes operate for 1000 hours, lubricating oil needs to be changed for the first time. Afterwards, the lubricating oil should be replaced when the machine operates for every 3000 hours.

On a weekly basis, the cover plate should be taken off the rotary disk. motor points and bearings between T-shaped axis and guide rod should be coated with oil. For every 1000 hours of machine operation,T-shaped axis and seal ring should be dismantled for overall cleaning, replacement and oil lubrication.

Oil lubrication table

Name	Plate No.	Lubrication parts
Machine oil	N4B GB443-84	Roller bearing, guiding elements
No.2 lithium base grease	ZL2 SY1412-75	Cam, roller bearing, chain
No.0 lithium base grease	ZLD SY1412-75	Speed reducer

8、Common fault removal

Fault status	Fault causes	Removal methods
Lack of capsules	Defective capsules block the inlet of board	Remove them out of the capsule pot with nozzle pins
	Capsule switch is excessively big or small	Adjust the position of capsule switch
	Capsule card is damaged or unbalanced	Replace capsule card or conduct balanced adjustment
Low rates of capsules in module holes	Horizontal fork is in excessive front or back position	Adjust the horizontal fork
Capsule separation	Excessively high vacuum degrees	Adjust the vacuum valve or reduce vacuum degree
	Low vacuum degree	Adjust the vacuum valve or increase vacuum degree
	Dirt in module holes	Clean upper and lower holes
	Different coaxiality of module holes	Adjust coaxiality with the mandril of upper and lower modules

	Capsule debris blocks air holes	Clean the capsule debris with small crochet hooks.
	Modules are damaged	Replace modules
	vacuum lines are blocked	Dredge vacuum lines.
Notches and coves appear in lockup capsules	Incorrect coaxiality of module holes	Adjust coaxiality with the mandril of upper and lower modules
	Curved capsule pins	Adjust or replace capsule pin
	Dirt on the pin end	Clean the pin end
	Excessively high pin	Adjust the pin height
	Module damage or wear	Replace modules
Incorrect lockup	Low capsule pin	Adjust the height of capsule pins
	Excessive filling	Adjust the craft of pharmaceutical factory
Failure of motor breakdown	Loose clutches and friction blocks	Adjust pressure of friction blocks
	Increasing frictions of lower	Reduce the relative humidity of

	dose basin and copper rings	production environment Adjust the gap of lower plane for dose basin

The device is installed with dual pipes for dust and powder suction(Refer to the figure). One of the pipelines is for cleaning the nodule holes. The other pipeline is for recycling the powder in the filling part. The airflow suction pipeline is also installed with powder recycler, consisting of gas and powder separation block, as well as powder bucket. The pipeline can directly recycle some of the lost materials from the filling process.

Due to the suction of vacuum cleaner, the lost materials are recycled by the exclusive powder pipelines. Due to gas and powder separation blocks, 80-90% of powder accumulates in the bucket. The gas is sucked into the vacuum cleaner and filtered through the pipeline(Notes: gaps between the separation blades can be adjusted according to the particle size of powder. The adjustment method is: Loosen the fixated bolts on the blades. Move the blades upward and downward. Then, screw up the bolts appropriately).

Powder bucket is installed with observation mirror. If powder is higher than the observation mirror, tear apart the fixed buttons. Then, add the drug powder (no need for sterilization or disinfection) directly to the material funnel of the filling machine for subsequent filling.

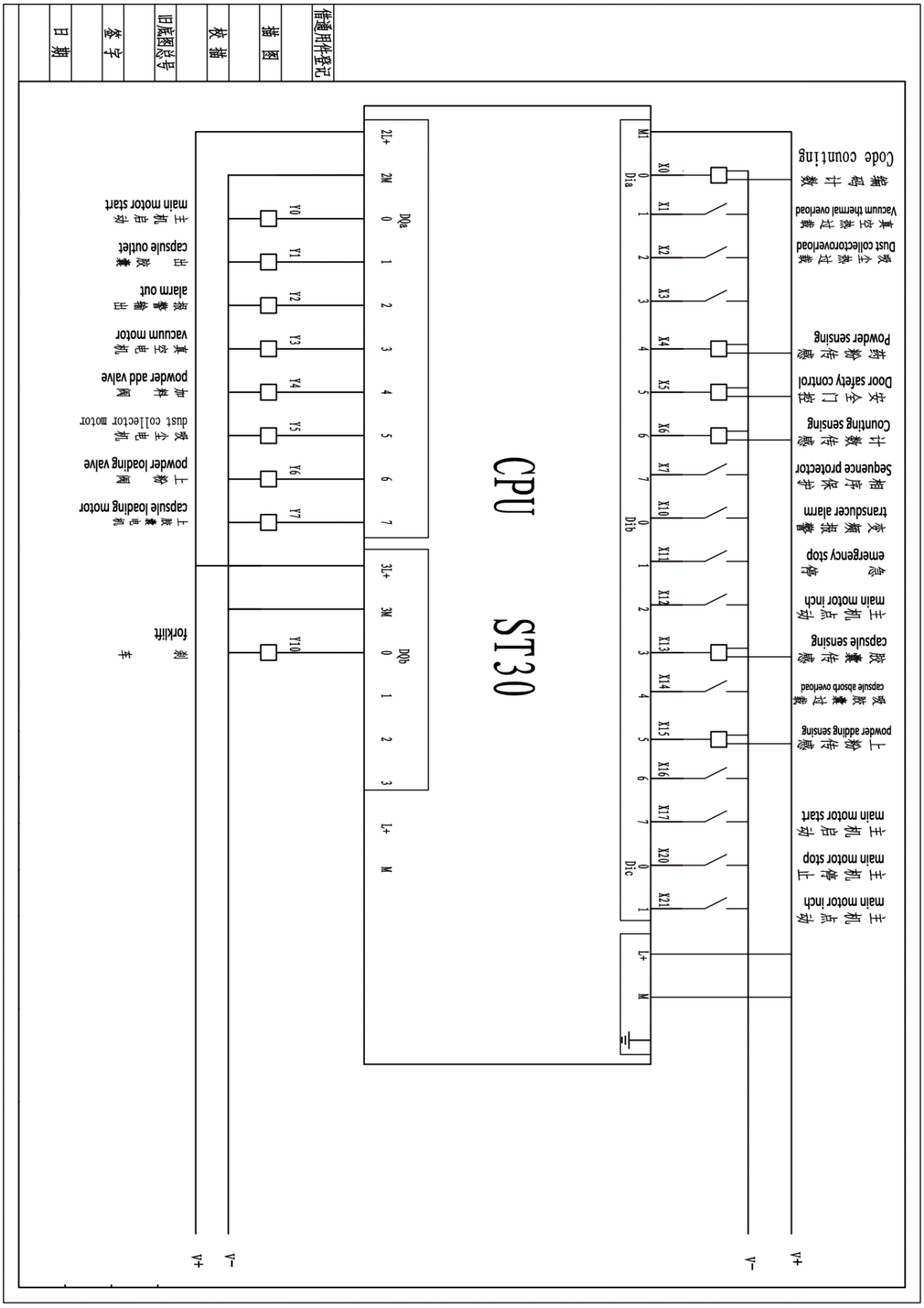

CPU ST30
Code counting
编码计数
Vacuum thermal overload
真空热过载
Dust collectoroverload
吸尘热过载
Powder sensing
药粉传感
Door safety control
安全门控
Counting sensing
计数传感
Sequence protector
相序保护
transducer alarm
变频报警
emergency stop
急停
main motor inch
主机点动
capsule sensing
胶囊传感
capsule absorb overload
吸胶囊过载
powder adding sensing
上粉传感
main motor start
主机启动
main motor stop
主机停止
main motor inch
主机点动
main motor start
主机启动
capsule outlet
出胶囊
alarm out
报警输出
vacuum motor
真空电机
powder add valve
加料阀
dust collector motor
吸尘电机
powder loading valve
上粉阀
capsule loading motor
上胶囊电机
forklift
剩车
V+
V-

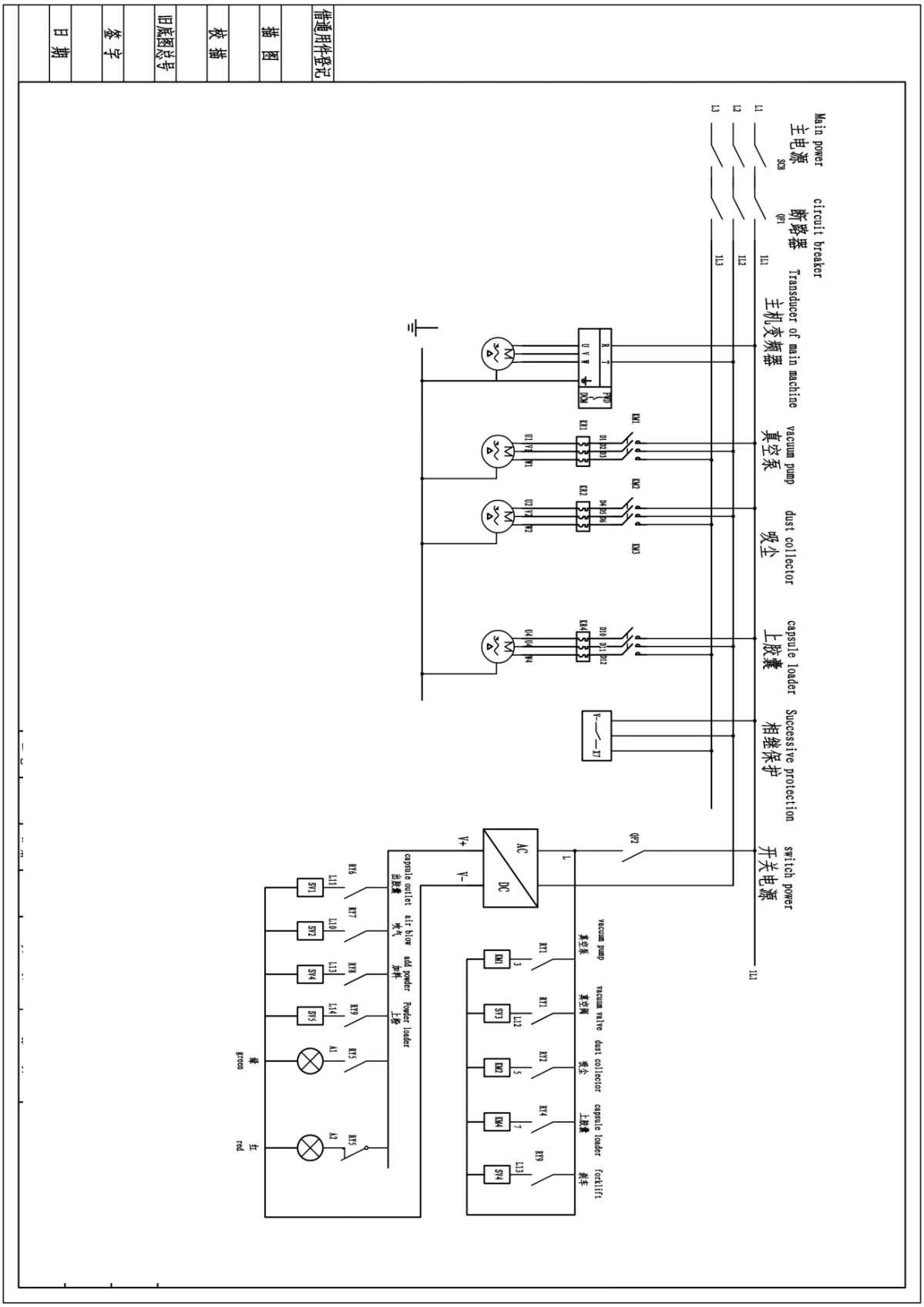
Main power
主电源
circuit breaker
断路器
Transducer of main machine
主机变频器
vacuum pump
真空泵
dust collector
吸尘
capsule loader
上胶囊
Successive protection
相继保护
switch power
开关电源
vacuum pump
真空泵
vacuum valve
真空阀
dust collector
吸尘
capsule loader
上胶囊
forklift
叉车
capsule outlet
出胶囊
air blow
吹气
add powder
加料
Powder loader
上粉
green
绿
red
红
借通用件登记
描 图
校 描
旧底图总号
签 字
日 期

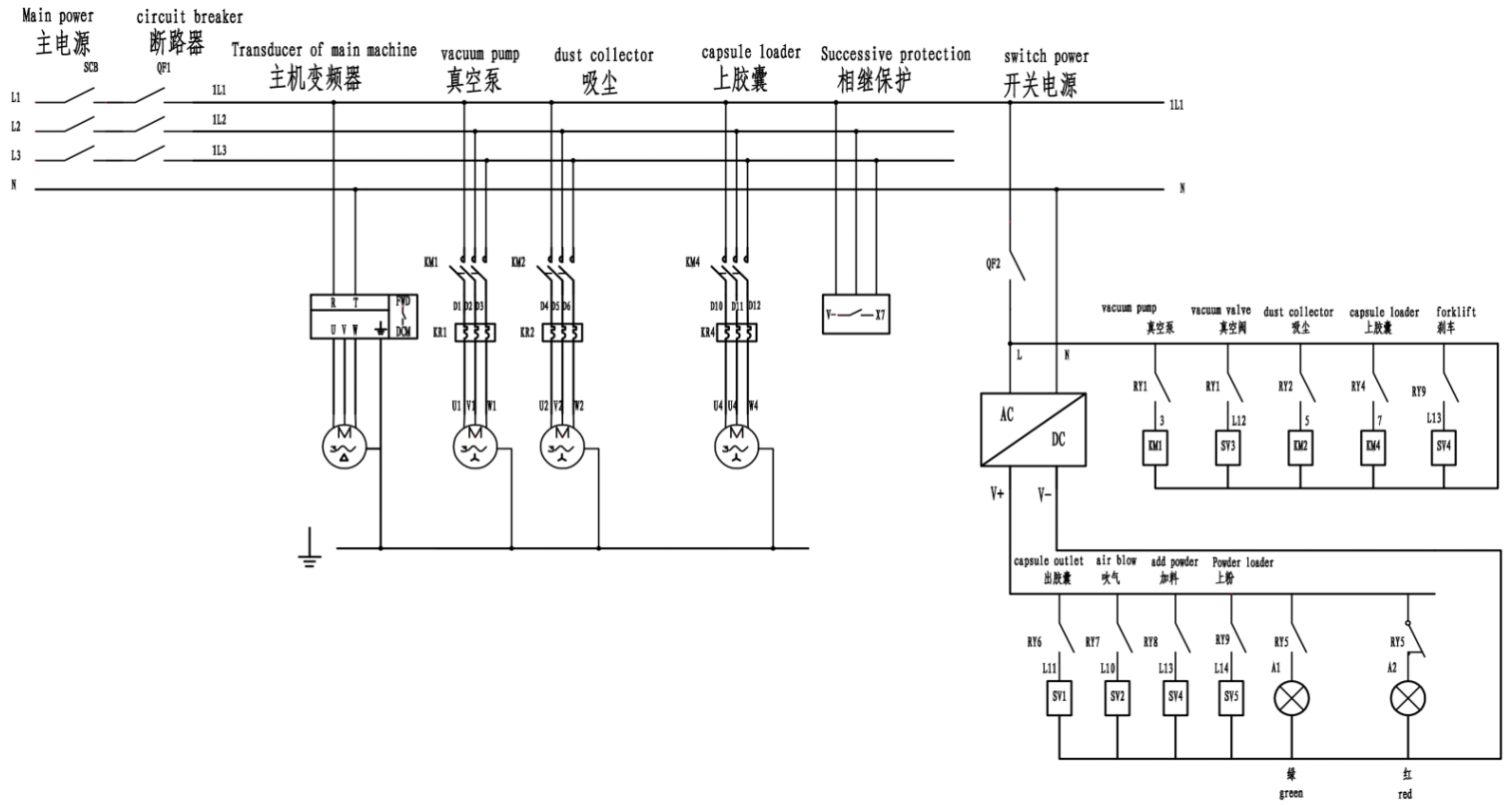

借通用件登记
描 图
校 描
旧底图总号
签 字
日 期

1 Language selection

Turn on the total power supply, and use the shaking handle to turn the host computer to make the machine run 1 / 3 cycles, confirm that there is no abnormal situation, remove the handle, open the power switch on the operation box, the display on the operation box panel appears No. 1 "Welcome to use" page, on this page first carry on the language selection, select the English pattern to enter the No. 1 English operation control page, select the English pattern to click on the English operation page.

2. Basic function introduction of key

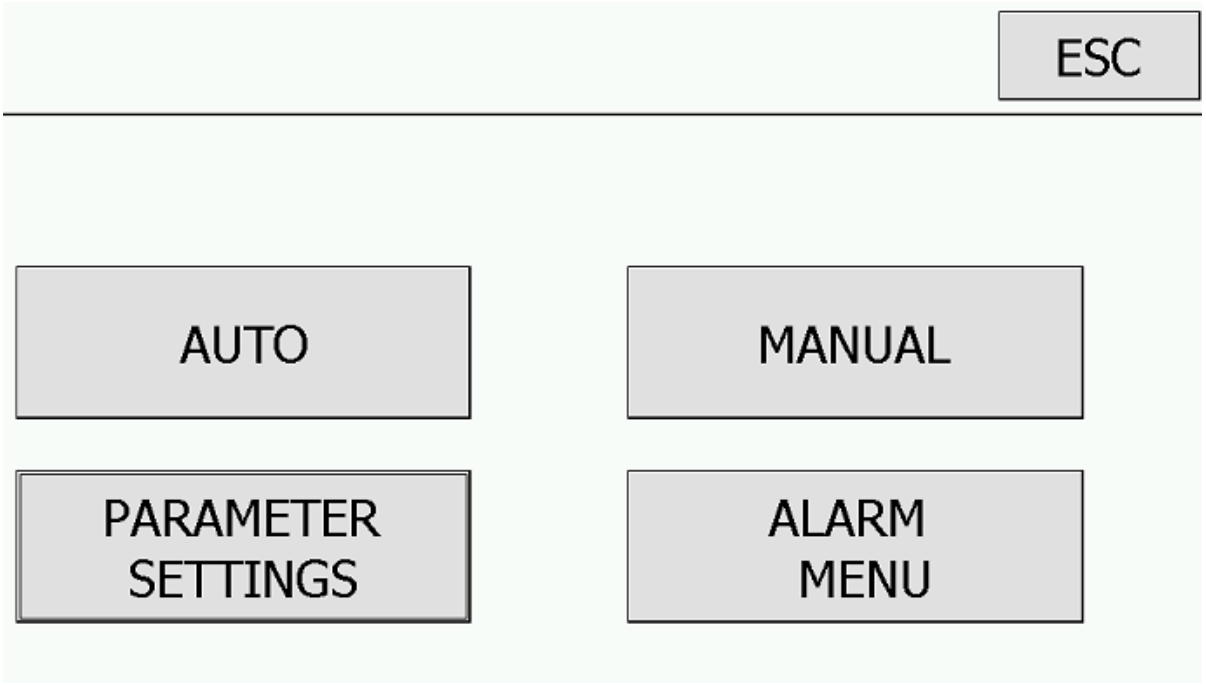

2 Introduction to the basic function of manual operation of keystrokes

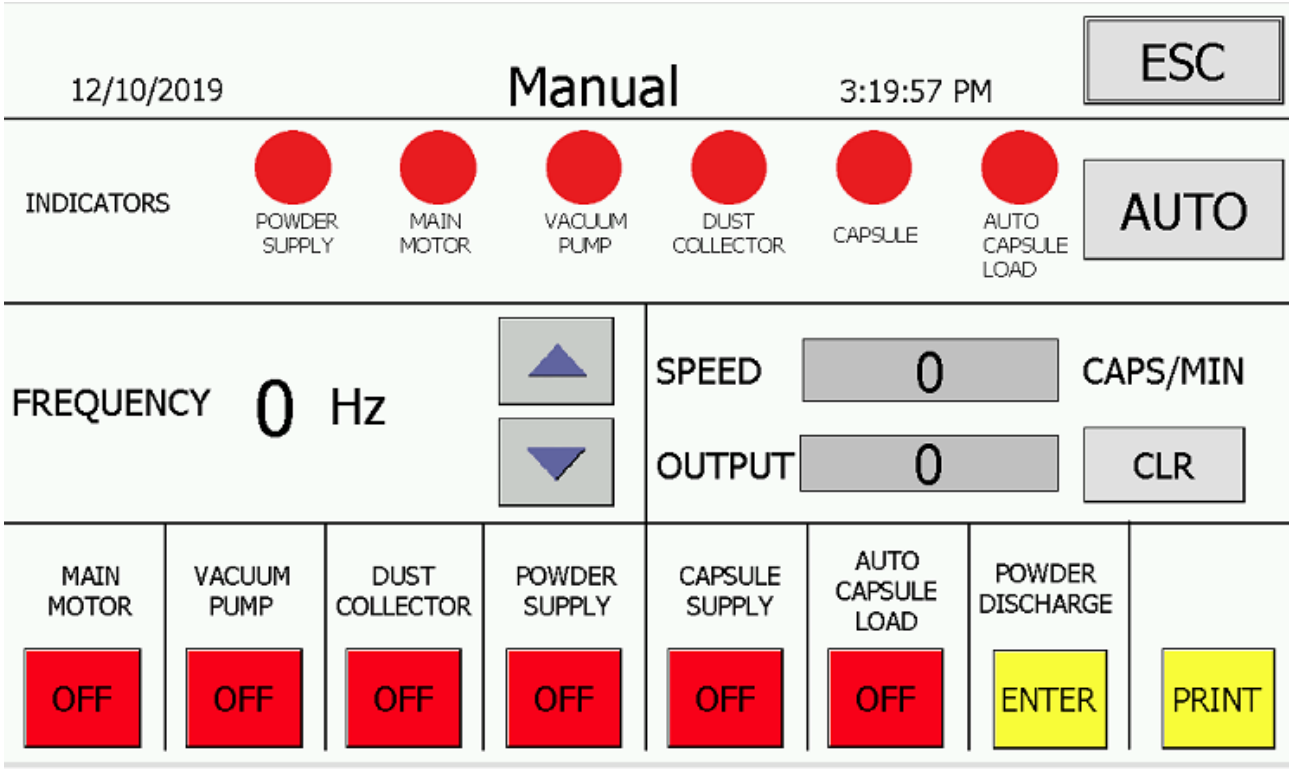

2.1 The "frequency" setting key is set, the maximum frequency of the machine is 50 Hz, the output of the machine is 200 grains per minute, the output of one hour is 1.2 thousand grains, the frequency "(##)" Hz key is clicked, the setting frame can be popped out, and the parameter can be set in the frame according to the production condition.

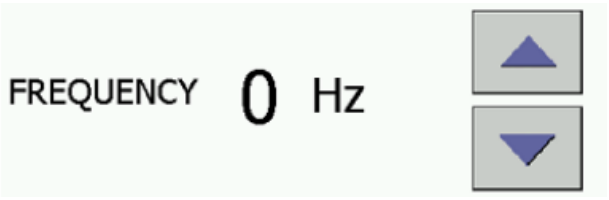

2.2 The count shows the total production of capsules currently produced and the speed shows the current output per minute. Click "zero" to return the output to zero

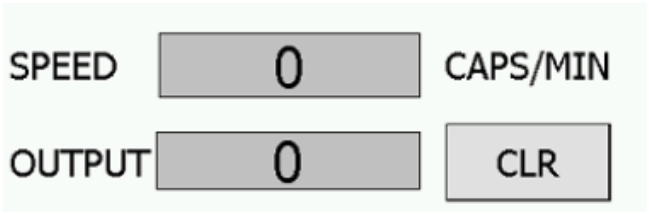

2.3 The machine will work continuously when the host starts the host. The machine stops immediately when it is closed.

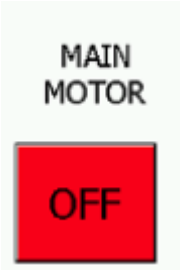

2.4 When the vacuum vacuum is started, negative pressure can be generated, and the capsule body cap in the die hole can be separated.

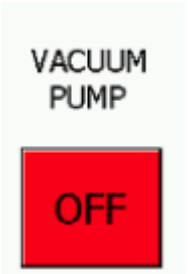

2.5 When the dust-absorbing and dust-absorbing motor is opened, the body cap can be separated, and the waste capsule of the cap-missing body can be sucked and collected into the filter bag.

2.6 when the charge is turned on, when the powder is lower than the set height, the feeding cylinder will automatically rotate the feeding.

2.7 When the capsule is opened when the capsule is opened, the capsule will be automatically added when the capsule is lower than the set height.

2.8 When the bag-pulling machine is in operation, the dispensing device can slide up and down to make the capsule enter into the hole of the bag-feeding plate and fall under the action of gravity, when the bag-feeding plate is raised, the caved reed will be stuck with one capsule, and the bag-feeding plate will collide with the "switch" when the capsule-feeding plate is lowered, The reed frame generates a rotary caplet to release the capsule. The switch is called a "to pull out the bag" and is controlled by the compressed air.

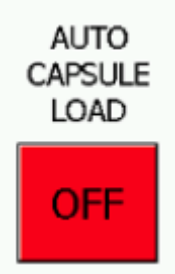

3.Introduction to the basic functions of automatic operation keys.

The function of automatic keystrokes is the same as that of manual keystrokes.

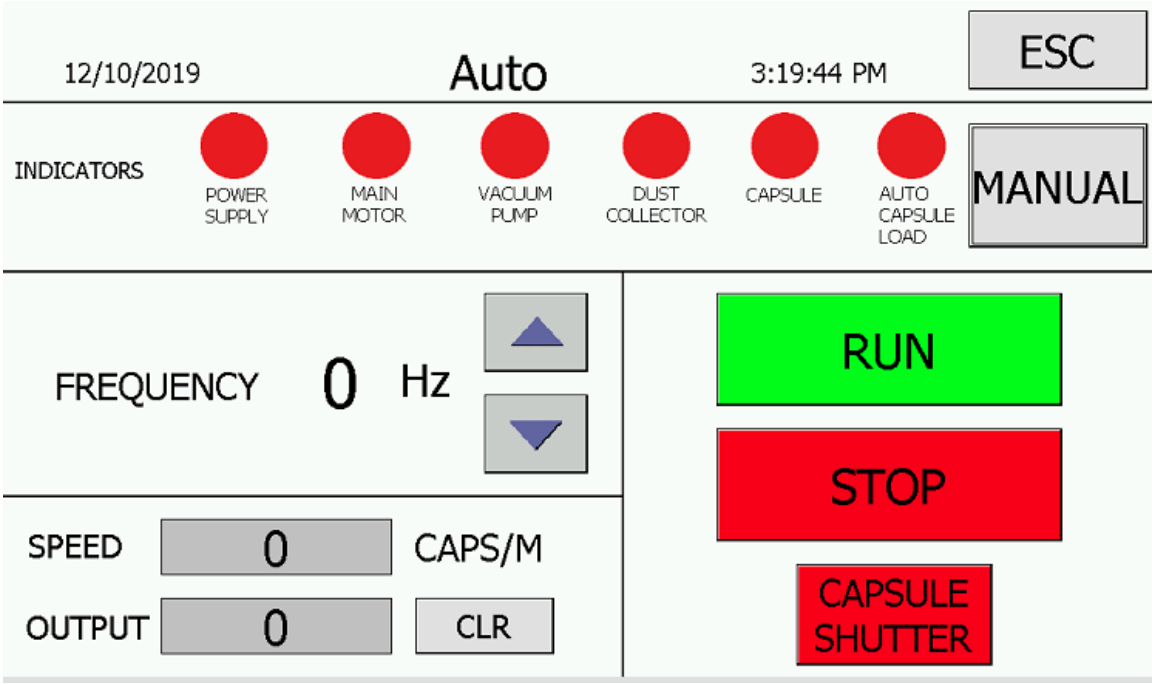

4. Introduction of key of parameter function

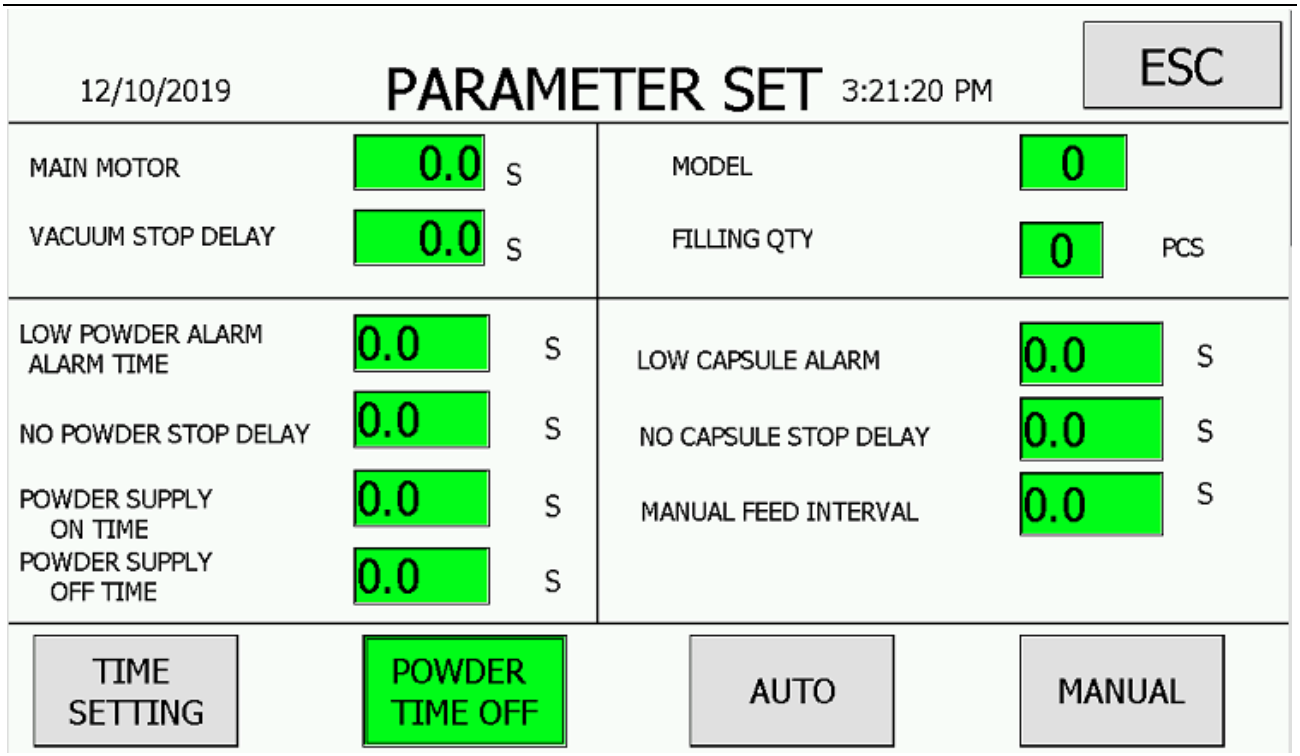

4.1 Host Open Delay Click Runtime The machine doesn't run right away. It doesn't start running until a few seconds later. The main function is to prevent misoperation and give the operator reaction time.

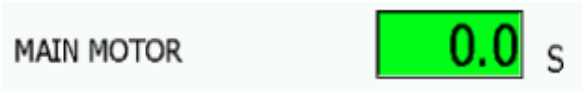

4.2 The time delay of the fan is not stopped immediately after closing the dust collection. Wait a few seconds to stop. The waiting time is the stop time of the fan. (The main function is to prevent misoperation, and the operator has a reaction time).

4.3 Number of filling quantity and number of holes 2

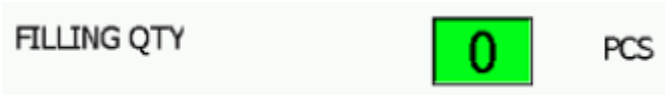

4.4 Supply delay when the material is below the detection position, the sensor sends a signal and waits for a few seconds to start delivering the material. This waiting time is the feeding delay.

4.5 The alarm time of the machine continues for a period of time when the material is missing, and if the new material is not added during this time, the alarm stops.

4.6 Powder downtime when the material in the barrel is lower than the detection position, the sensor sends a signal and closes the main engine. After waiting for a period of time, no new materials have been added to the mainframe to stop working.

4.7 Timing of dosing The material can be fed regularly.

4.8 The capsule alarm time continues for a period of time when the capsule is missing, and if the new capsule is not added during this time, the alarm is stopped.

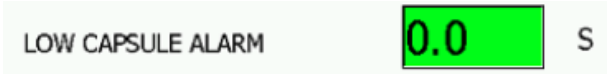

4.9 And when the capsule in the capsule hopper is lower than the detection position, the sensor sends a signal to close the main machine. After waiting for a period of time, no new capsule is added to the host to stop working.

4.10 Feeding time The duration of the feeding process.

4.11 The time when the charging and closing time is closed.

4.12 Time setting can set the time date on this parameter

NJP-400C FULL AUTOMATIC CAPSULE FILLING MACHINE

part assembly drawing

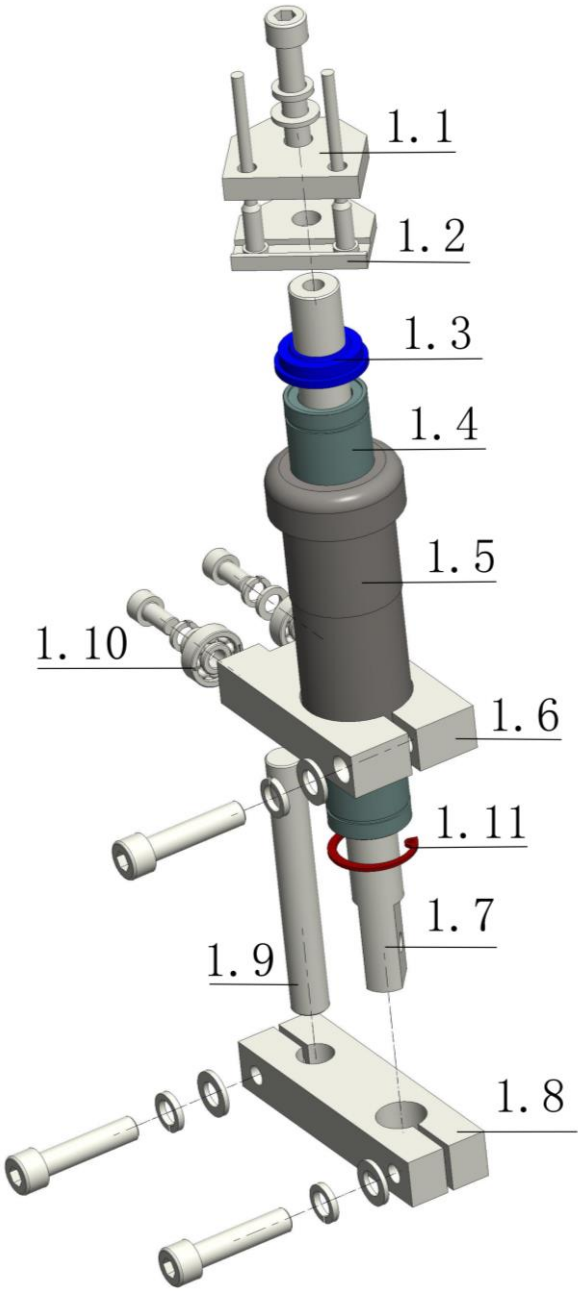

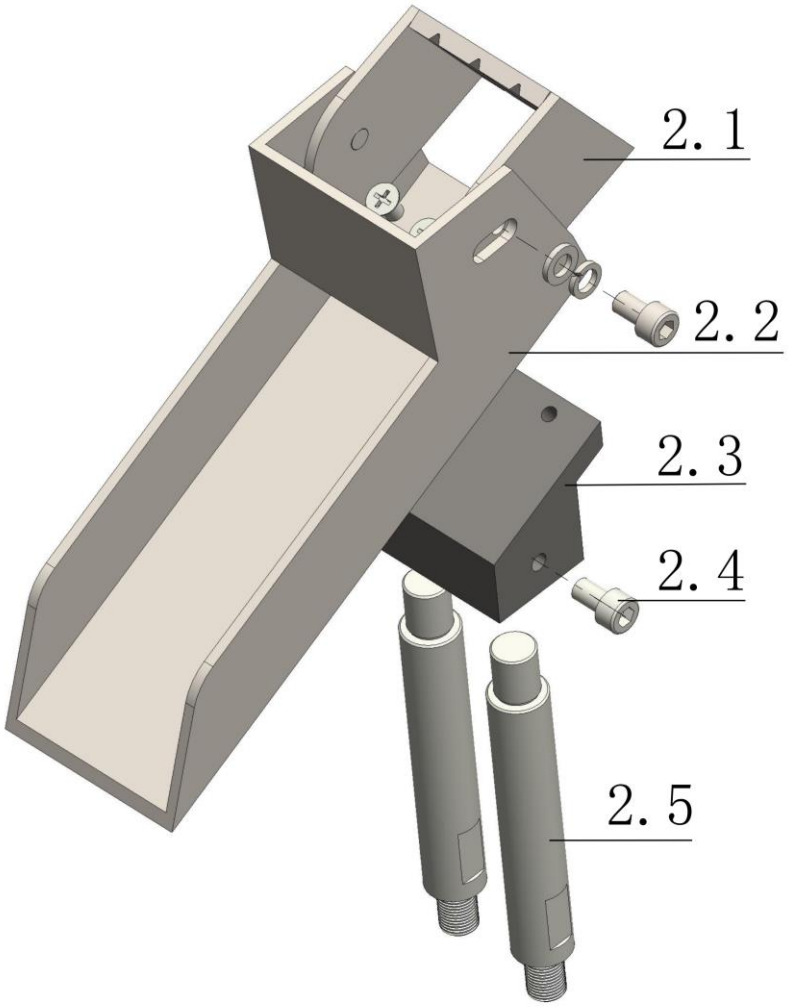
2.1
2.2
2.3
2.4
2.5

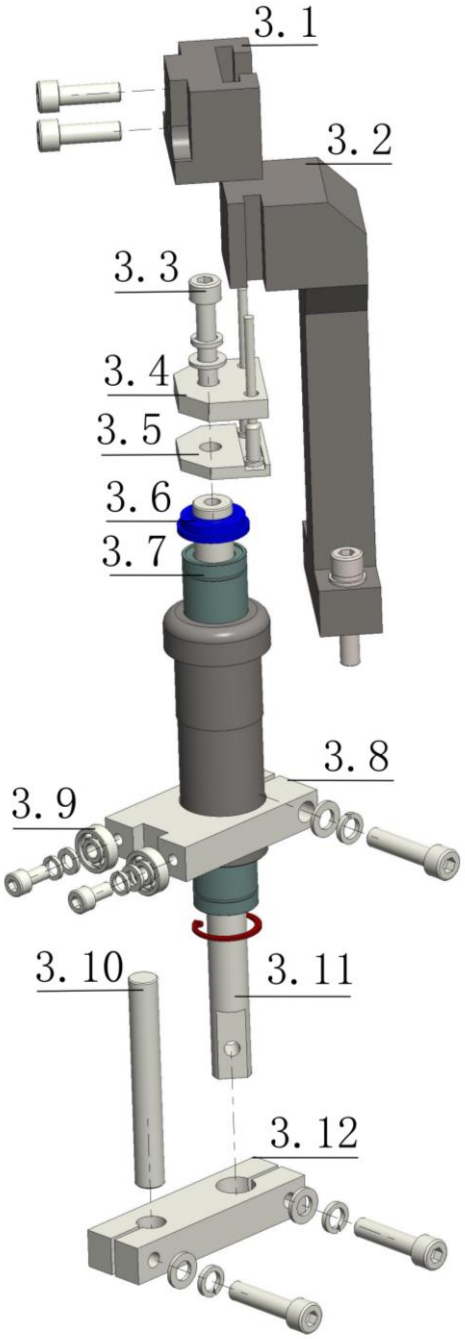
3. 1
3. 2
3. 3
3. 4
3. 5
3. 6
3. 7
3. 8
3. 9
3. 10
3. 11
3. 12

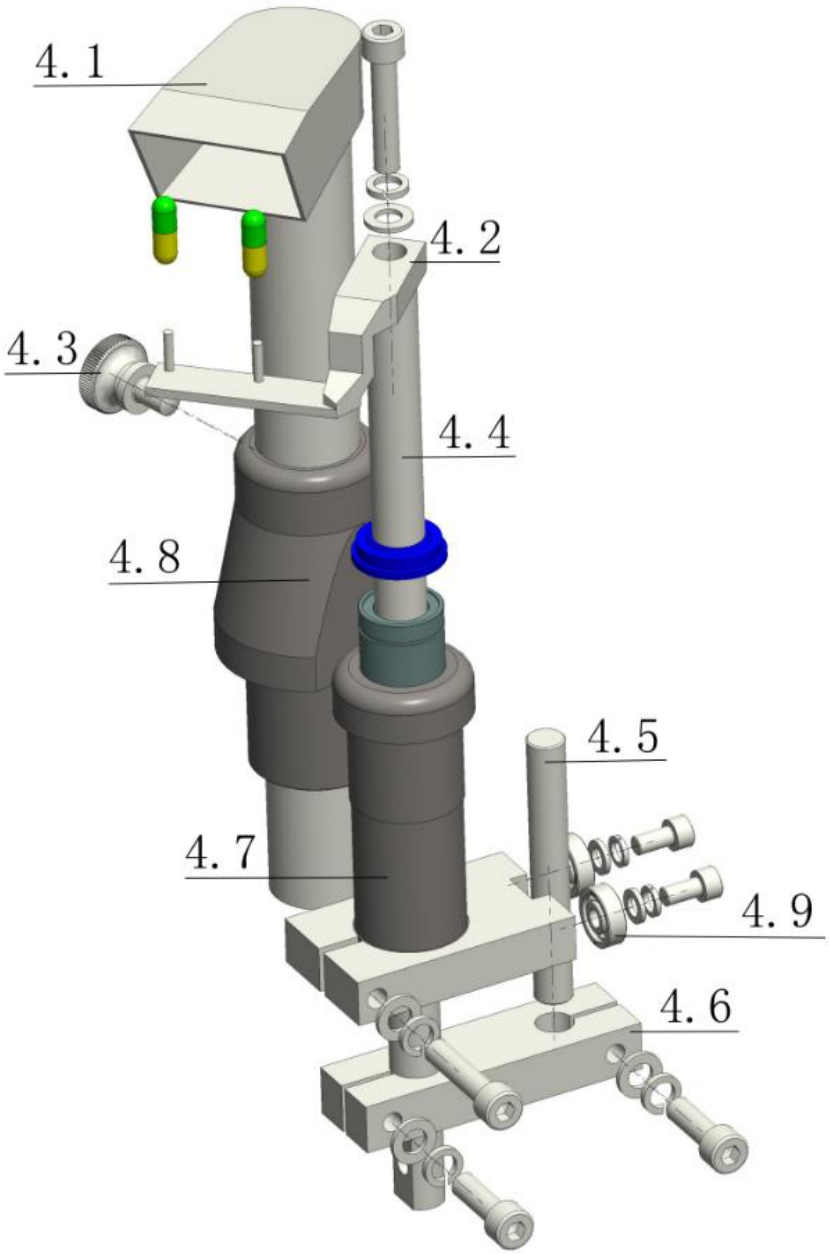
4. 1
4. 2
4. 3
4. 4
4. 8
4. 5
4. 7
4. 9
4. 6

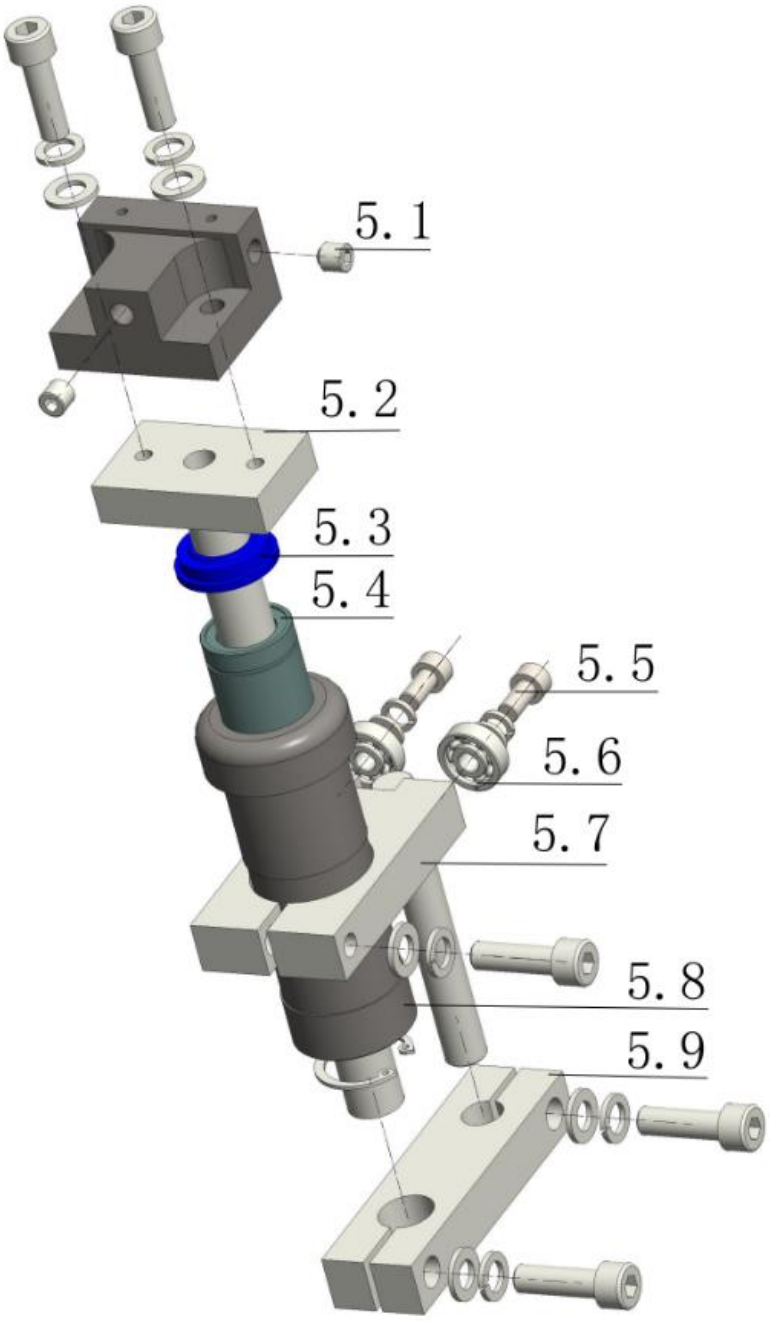
5.1
5.2
5.3
5.4
5.5
5.6
5.7
5.8
5.9

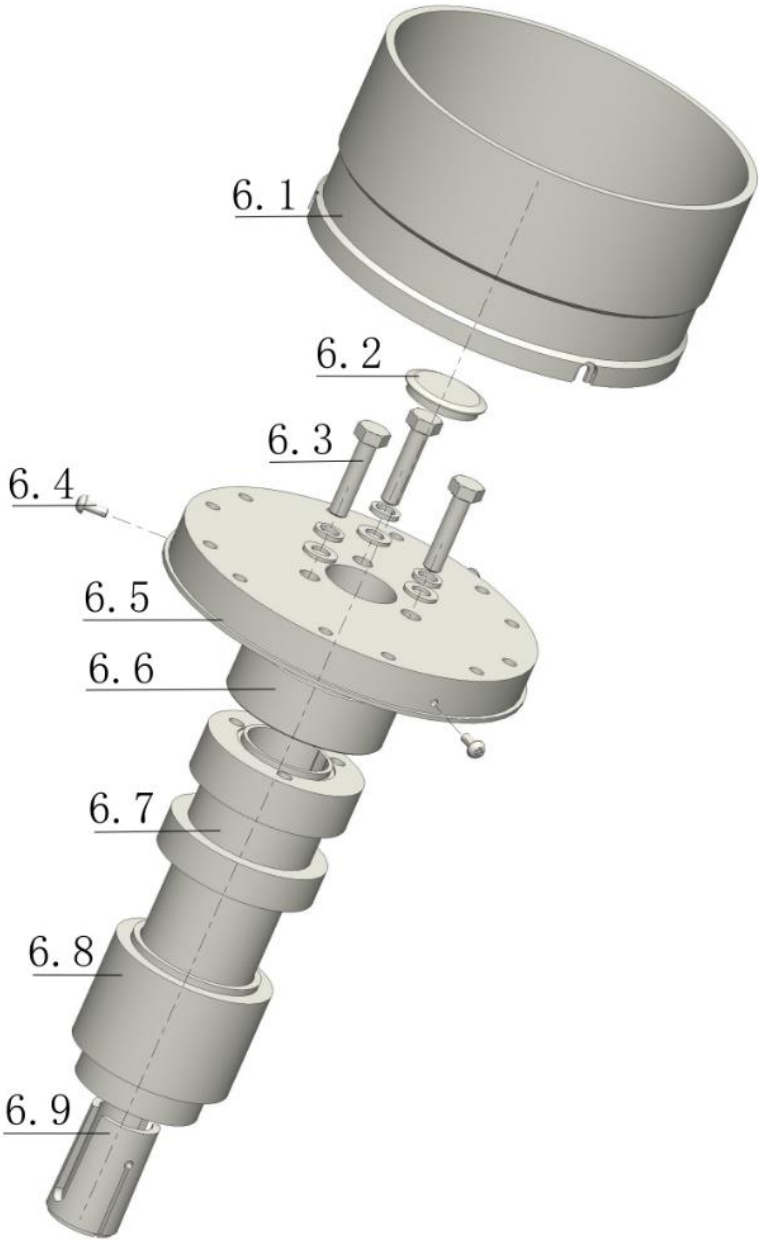
6. 1
6. 2
6. 3
6. 4
6. 5
6. 6
6. 7
6. 8
6. 9

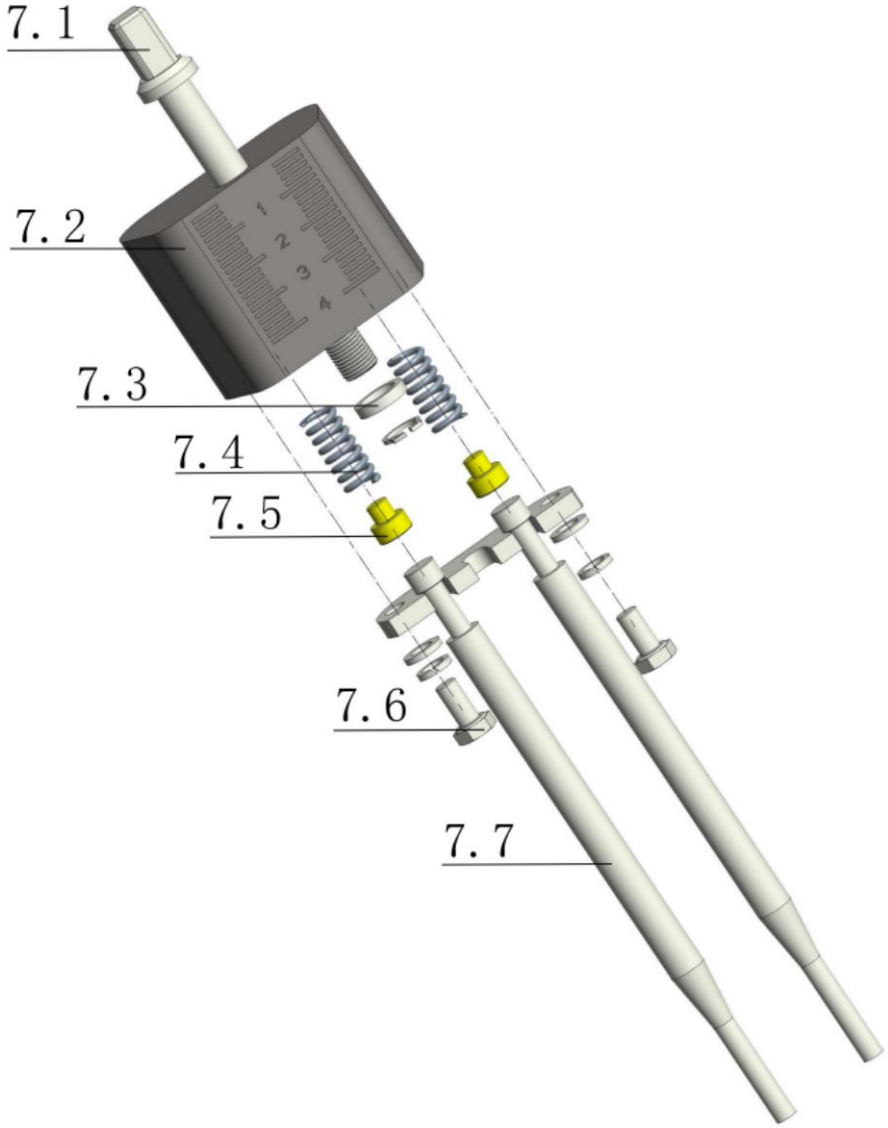
7.1
7.2
7.3
7.4
7.5
7.6
7.7

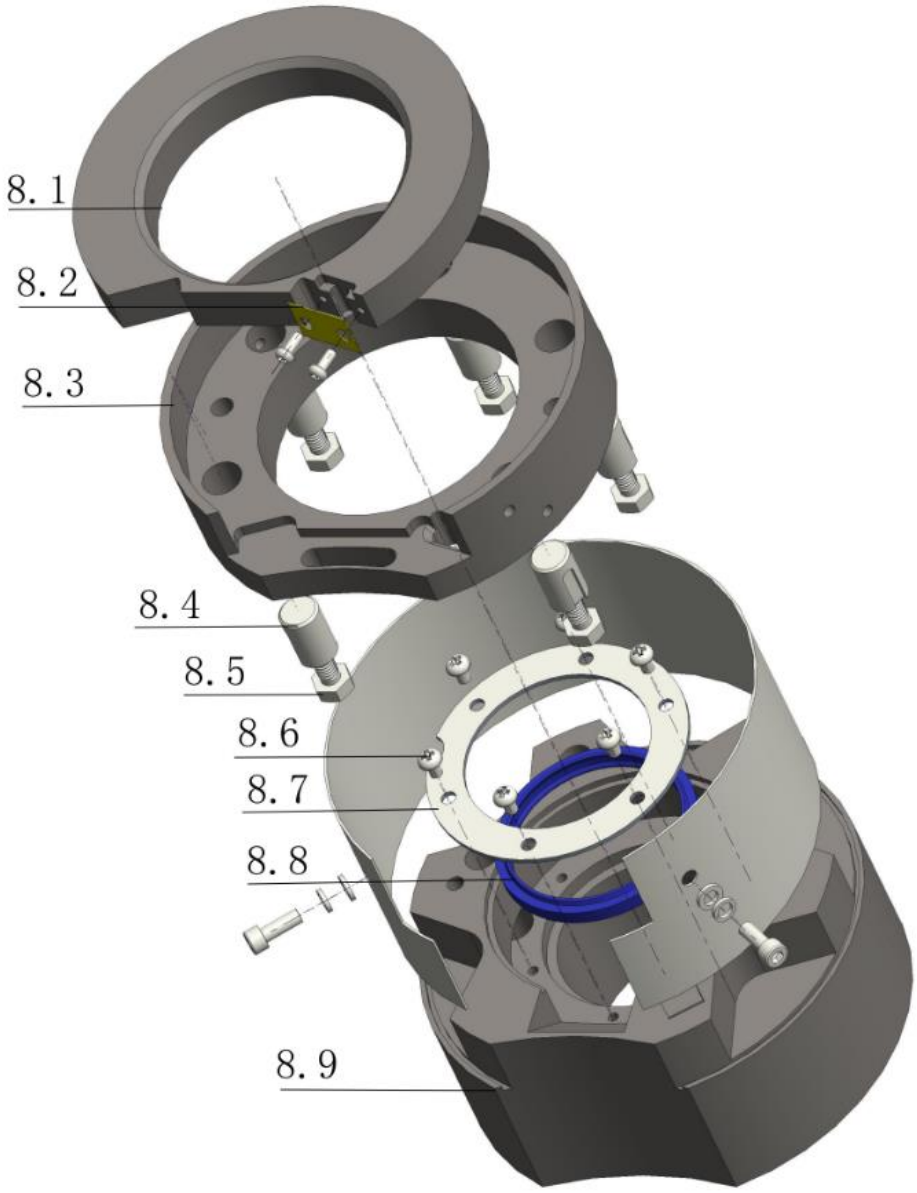
8. 1
8. 2
8. 3
8. 4
8. 5
8. 6
8. 7
8. 8
8. 9

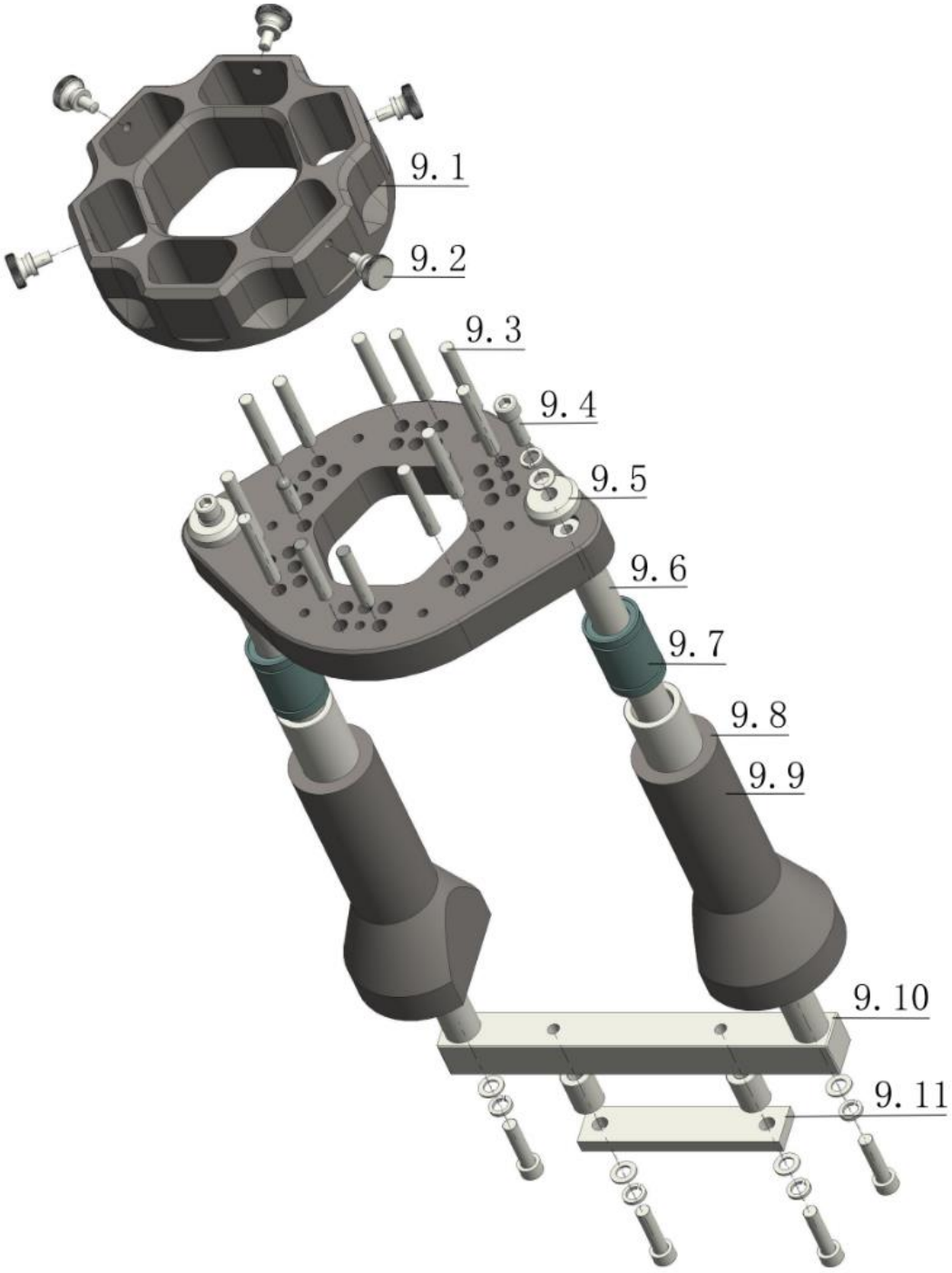
9. 1
9. 2
9. 3
9. 4
9. 5
9. 6
9. 7
9. 8
9. 9
9. 10
9. 11

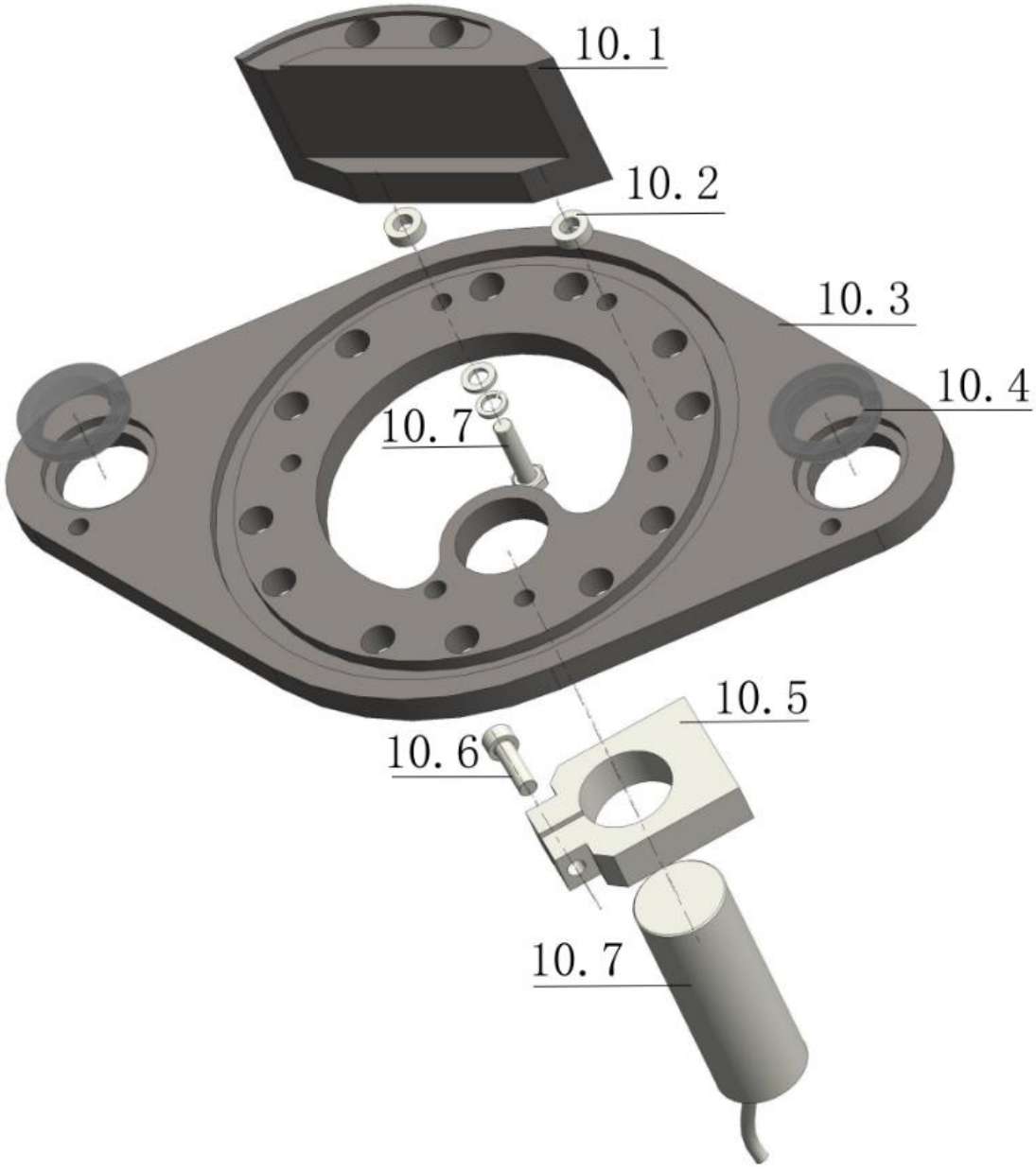
10. 1
10. 2
10. 3
10. 4
10. 7
10. 5
10. 6
10. 7

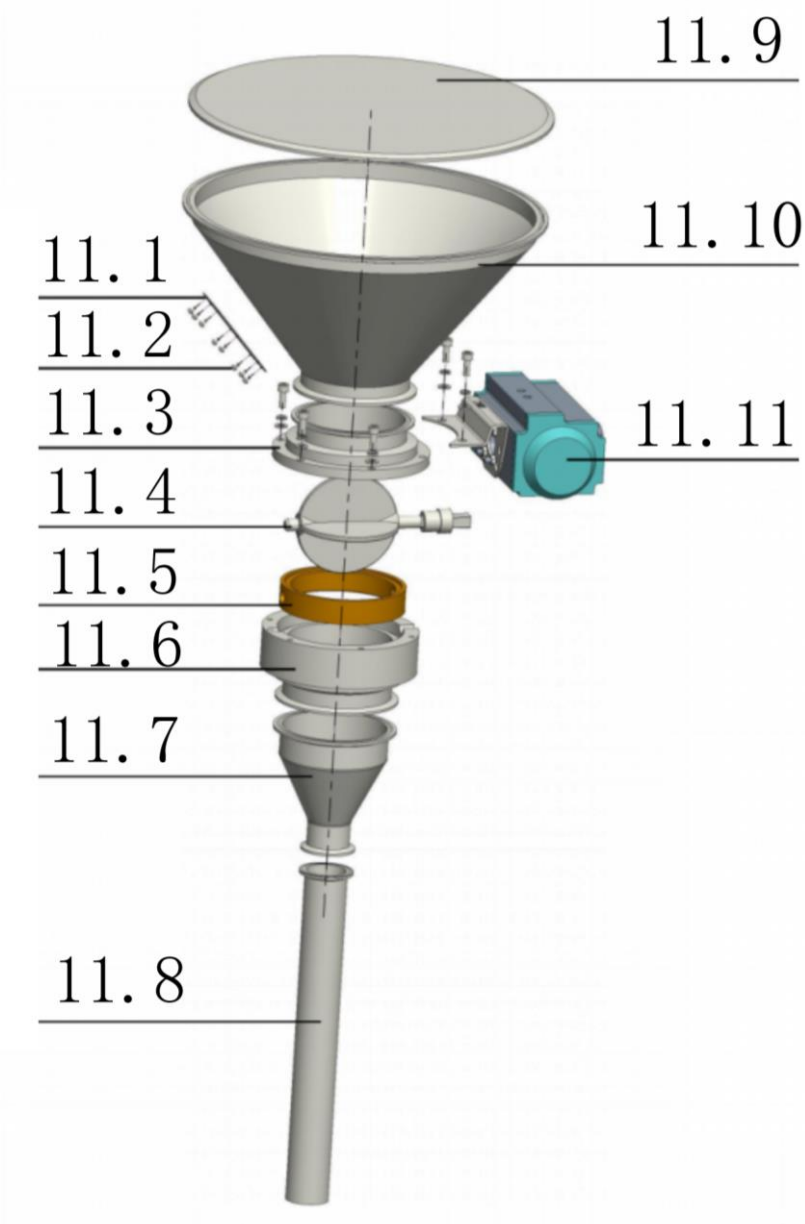
11.9
11.10
11.1
11.2
11.3
11.11
11.4
11.5
11.6
11.7
11.8

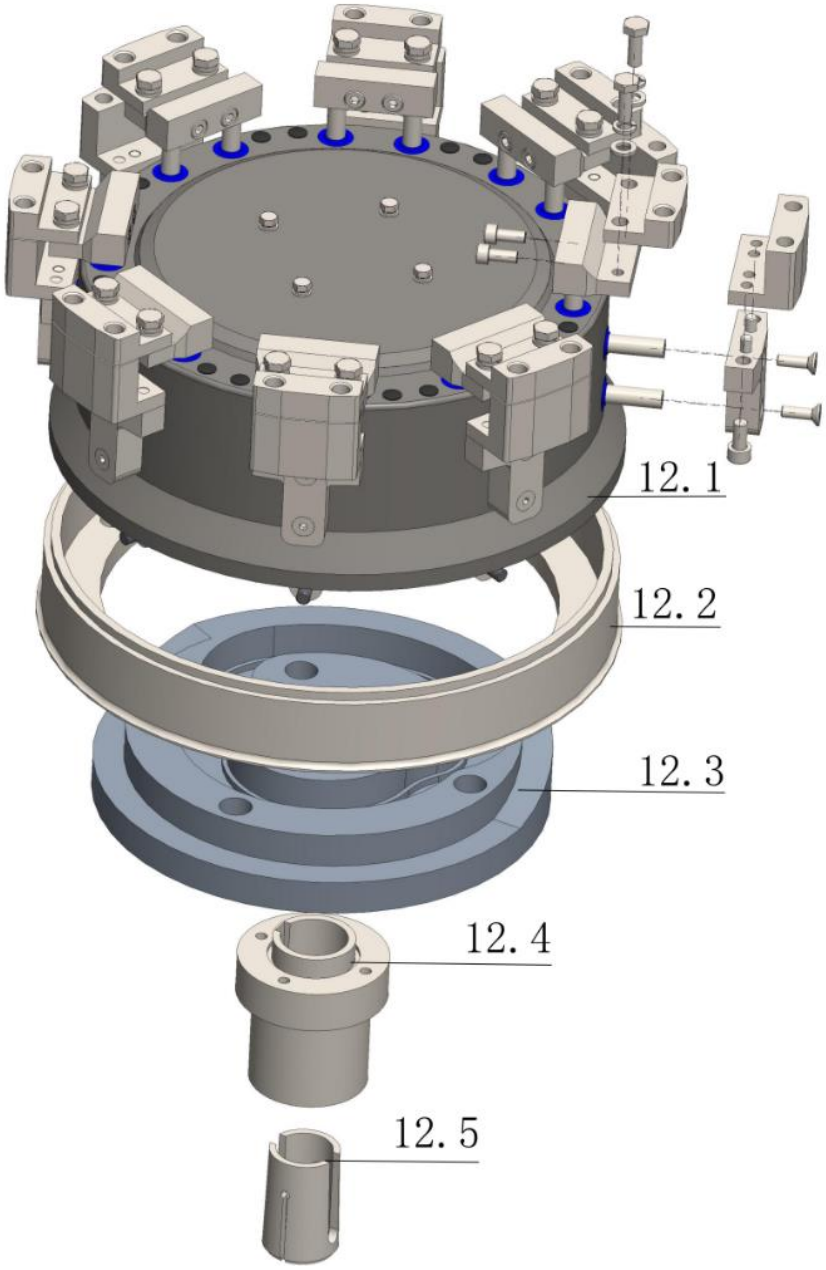
12.1
12.2
12.3
12.4
12.5

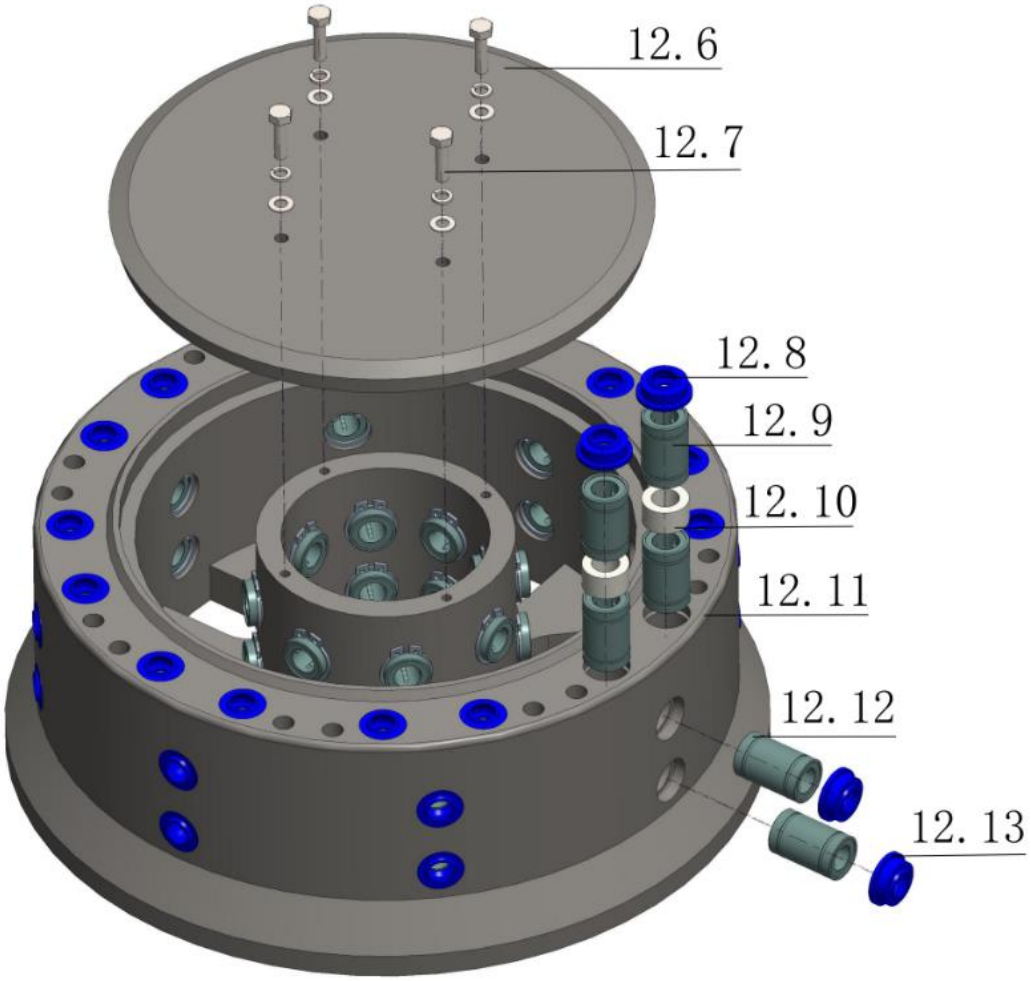
12. 6
12. 7
12. 8
12. 9
12. 10
12. 11
12. 12
12. 13

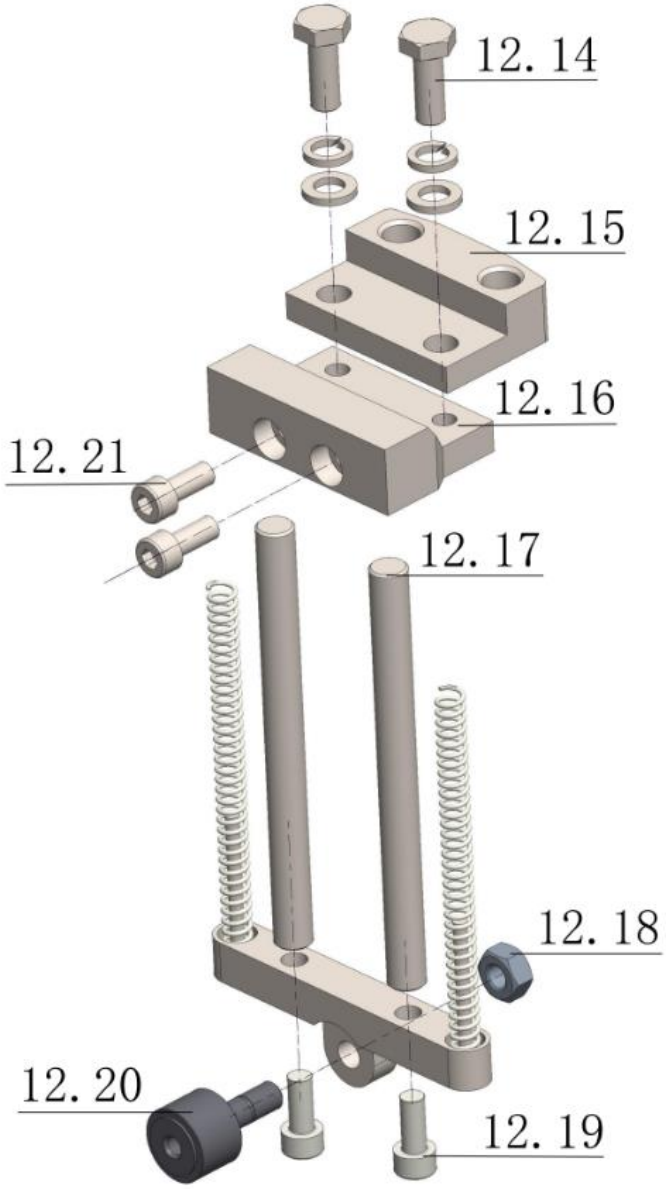
12. 14
12. 15
12. 16
12. 21
12. 17
12. 18
12. 20
12. 19

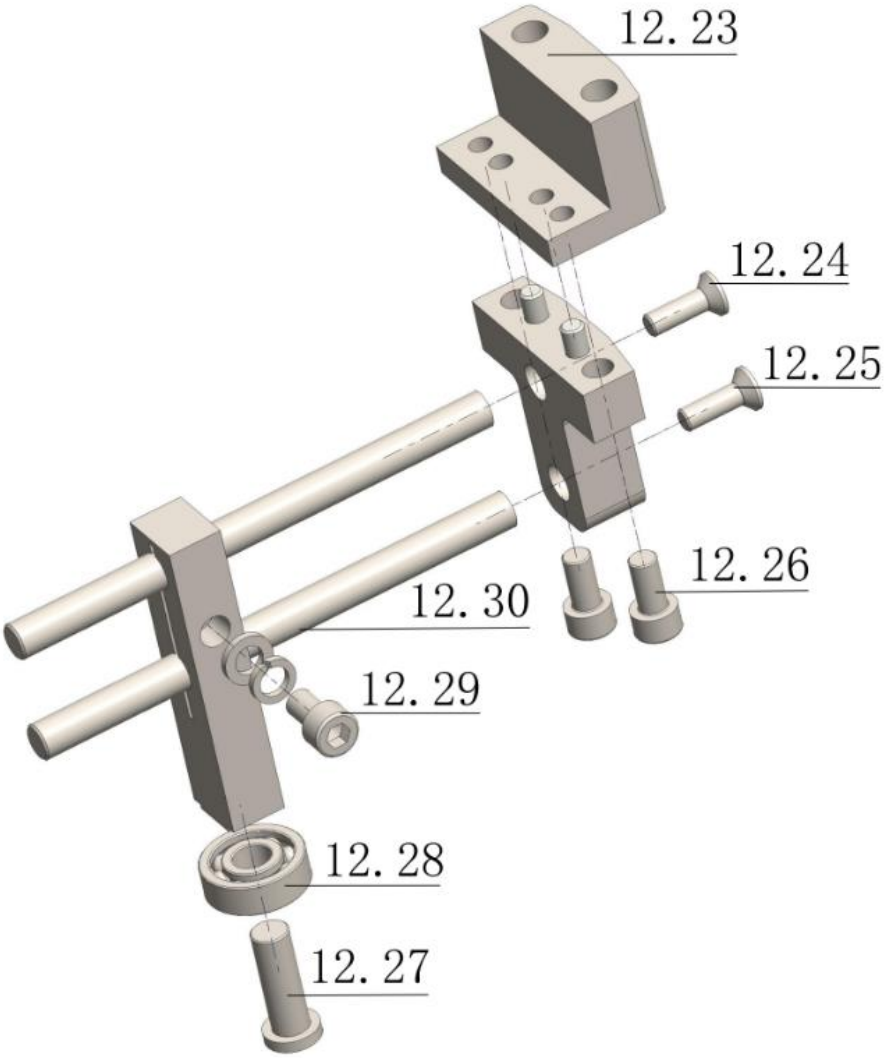
12. 23
12. 24
12. 25
12. 26
12. 30
12. 29
12. 28
12. 27

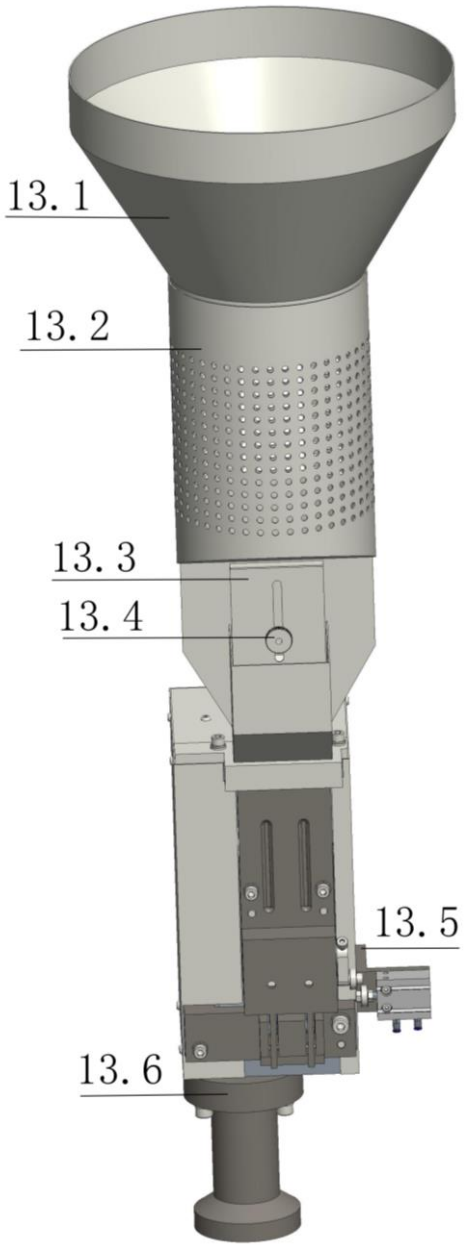
13.1
13.2
13.3
13.4
13.5
13.6

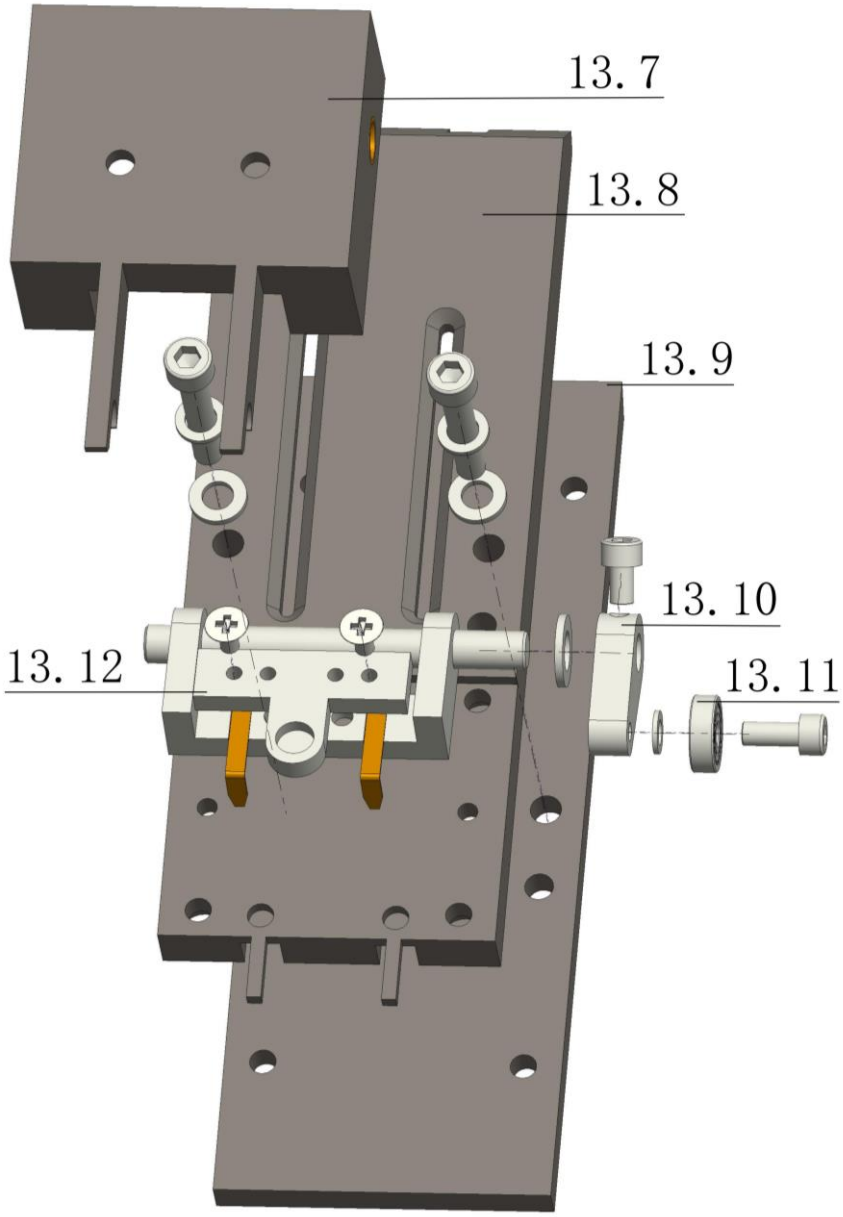
13. 7
13. 8
13. 9
13. 10
13. 12
13. 11

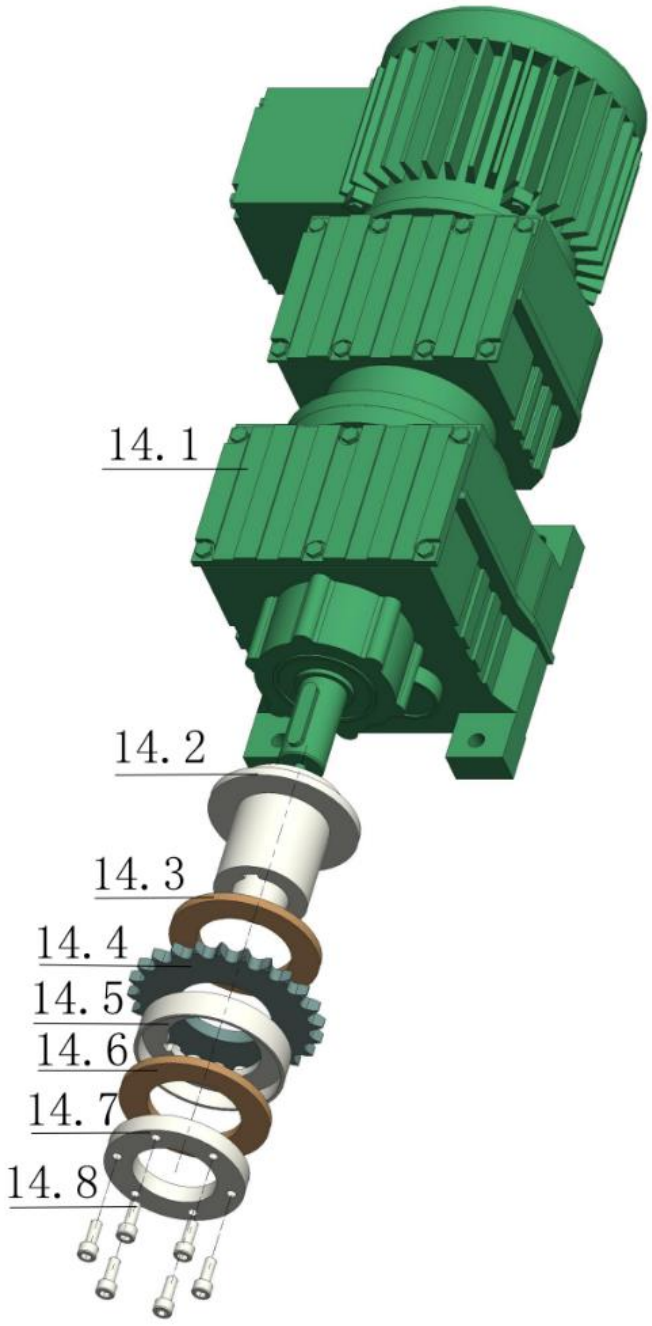
14. 1
14. 2
14. 3
14. 4
14. 5
14. 6
14. 7
14. 8

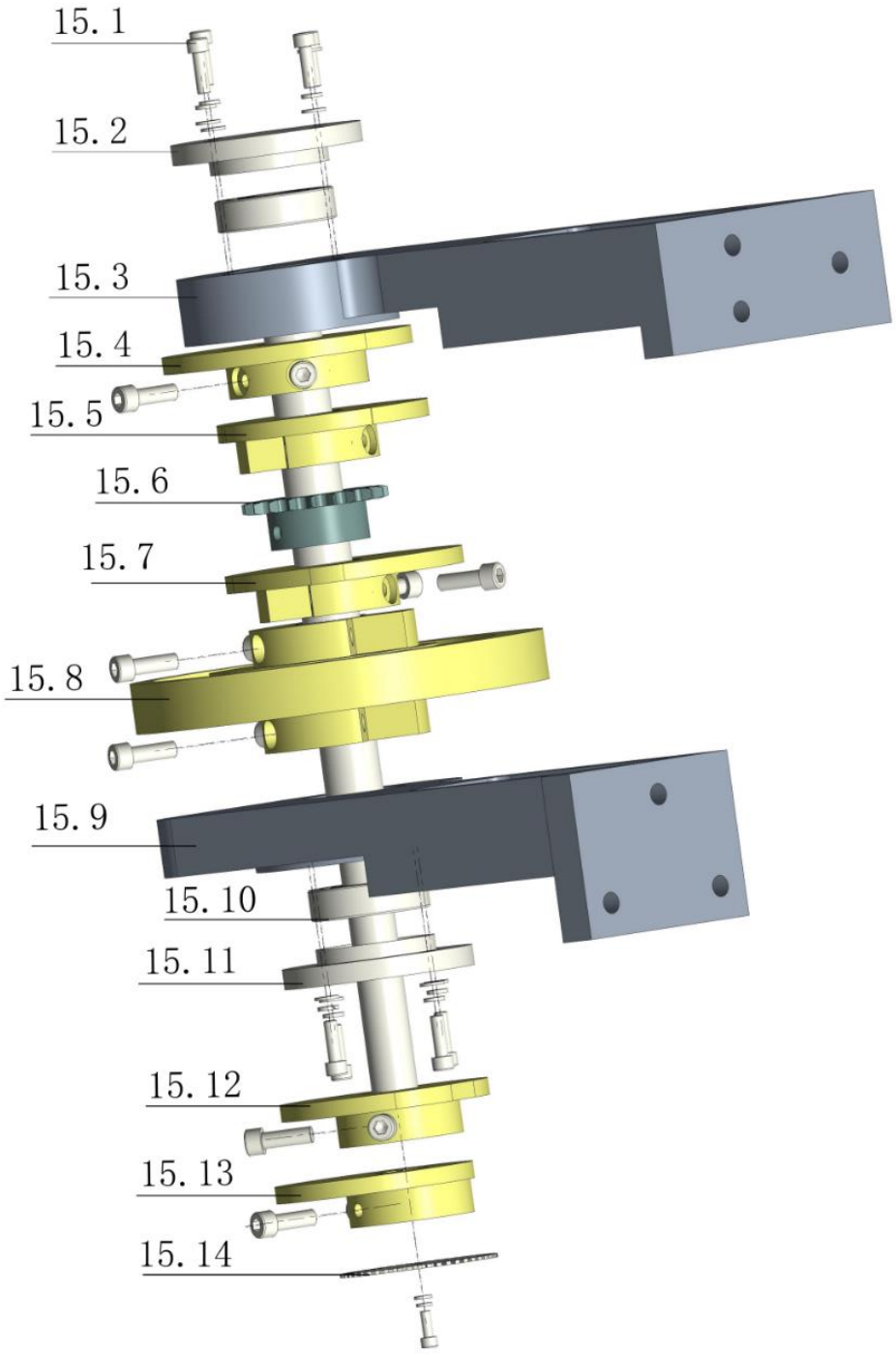
15. 1
15. 2
15. 3
15. 4
15. 5
15. 6
15. 7
15. 8
15. 9
15. 10
15. 11
15. 12
15. 13
15. 14

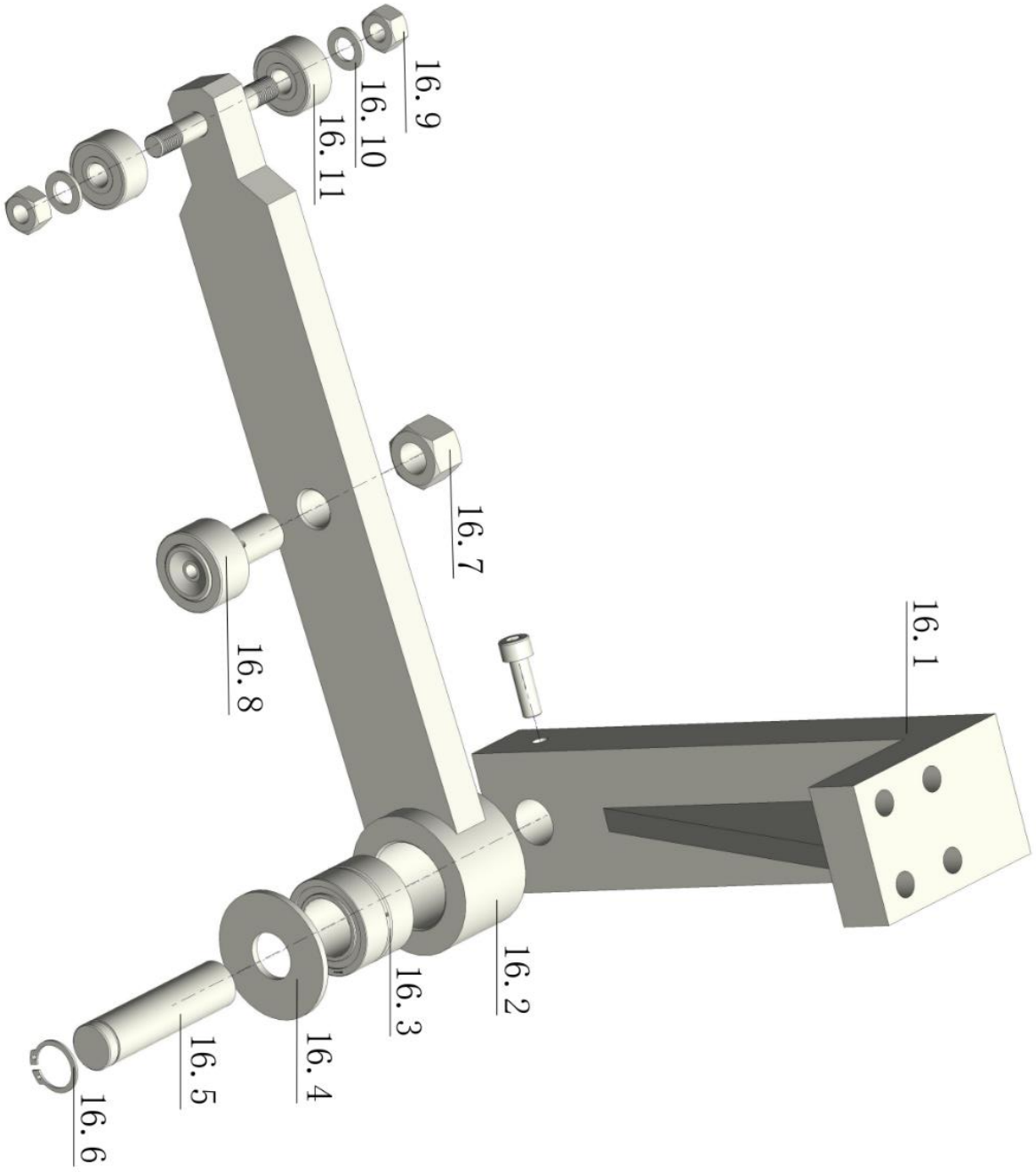
16. 9
16. 10
16. 11
16. 7
16. 8
16. 1
16. 2
16. 3
16. 4
16. 5
16. 6

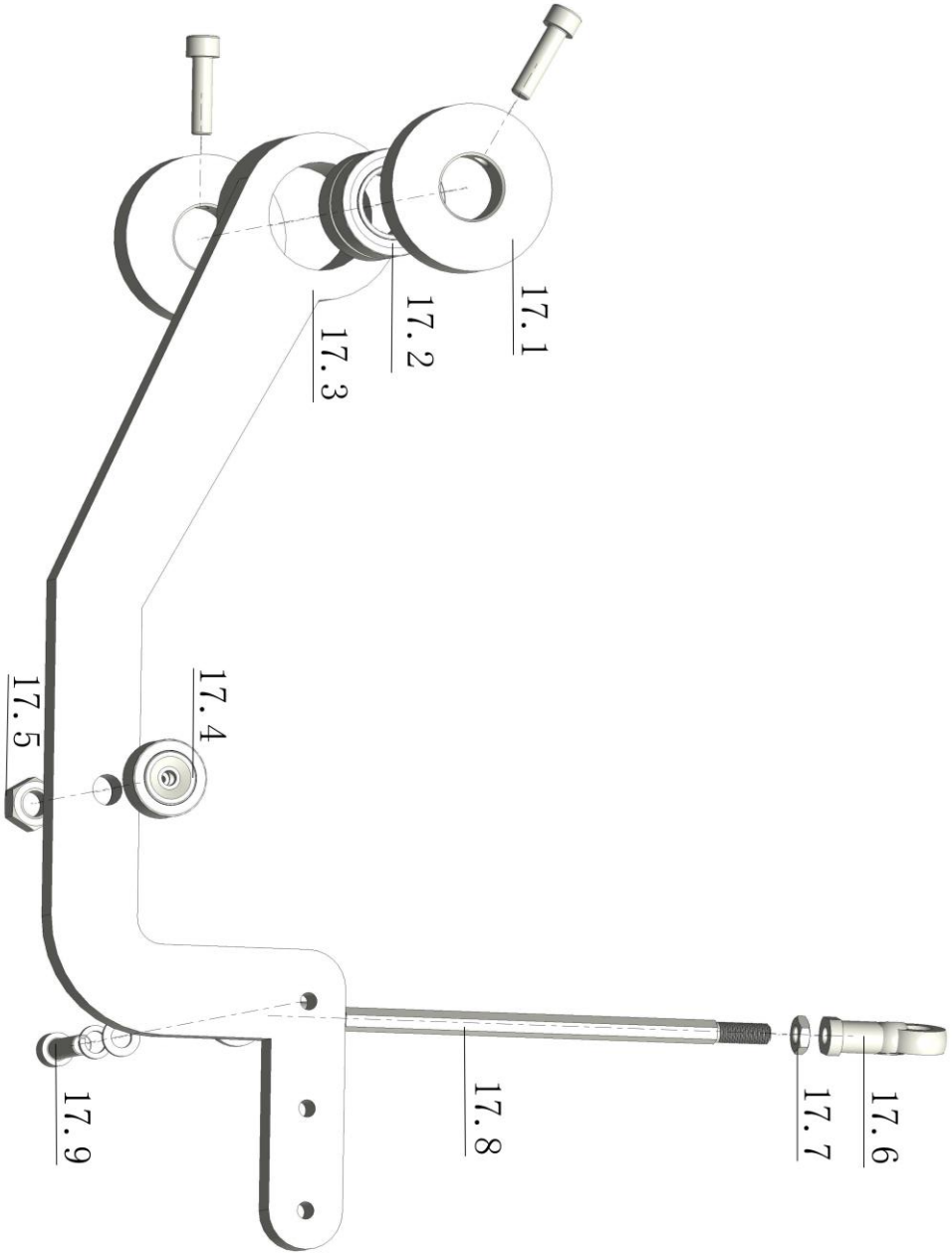
17.1
17.2
17.3
17.4
17.5
17.6
17.7
17.8
17.9

Sowing

3

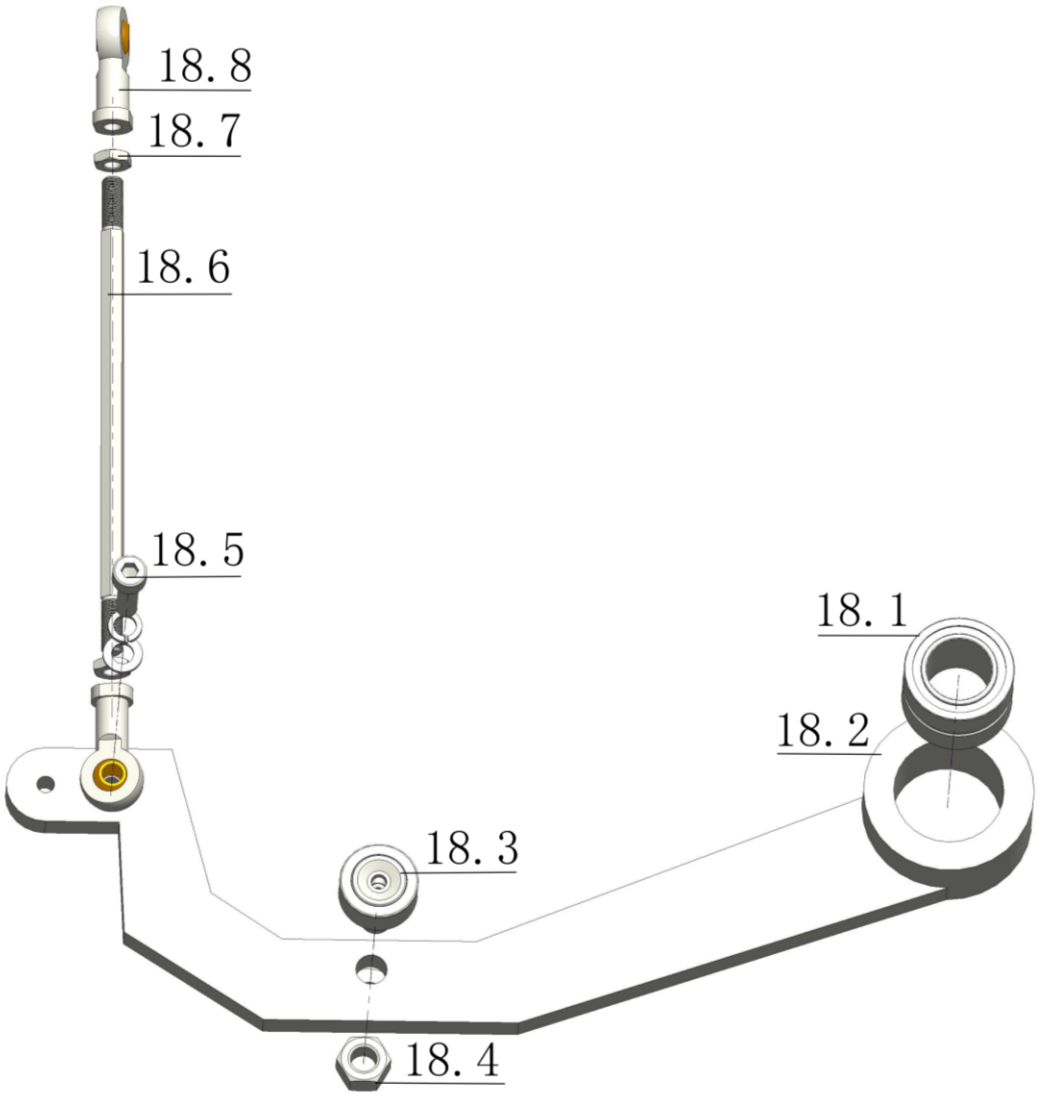

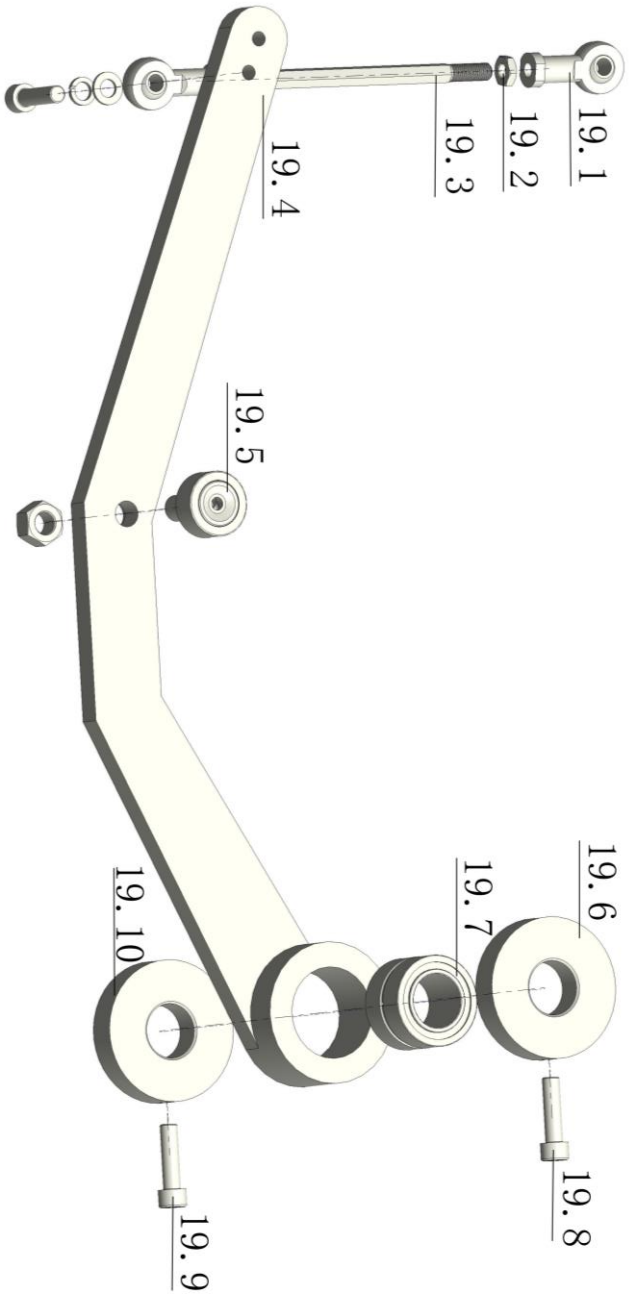
19.1
19.2
19.3
19.4
19.5
19.6
19.7
19.8
19.9
19.10

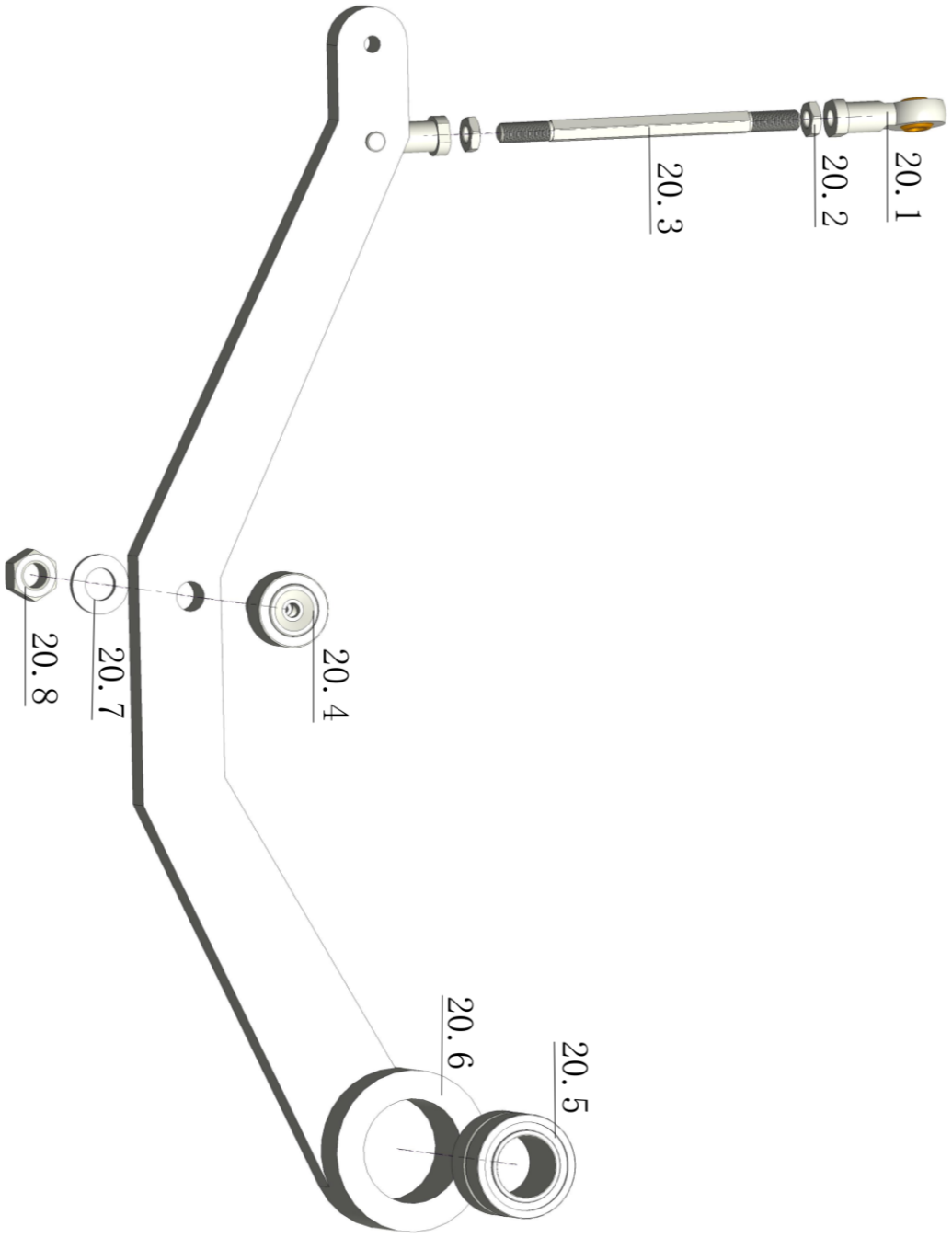
20.1
20.2
20.3
20.4
20.5
20.6
20.7
20.8

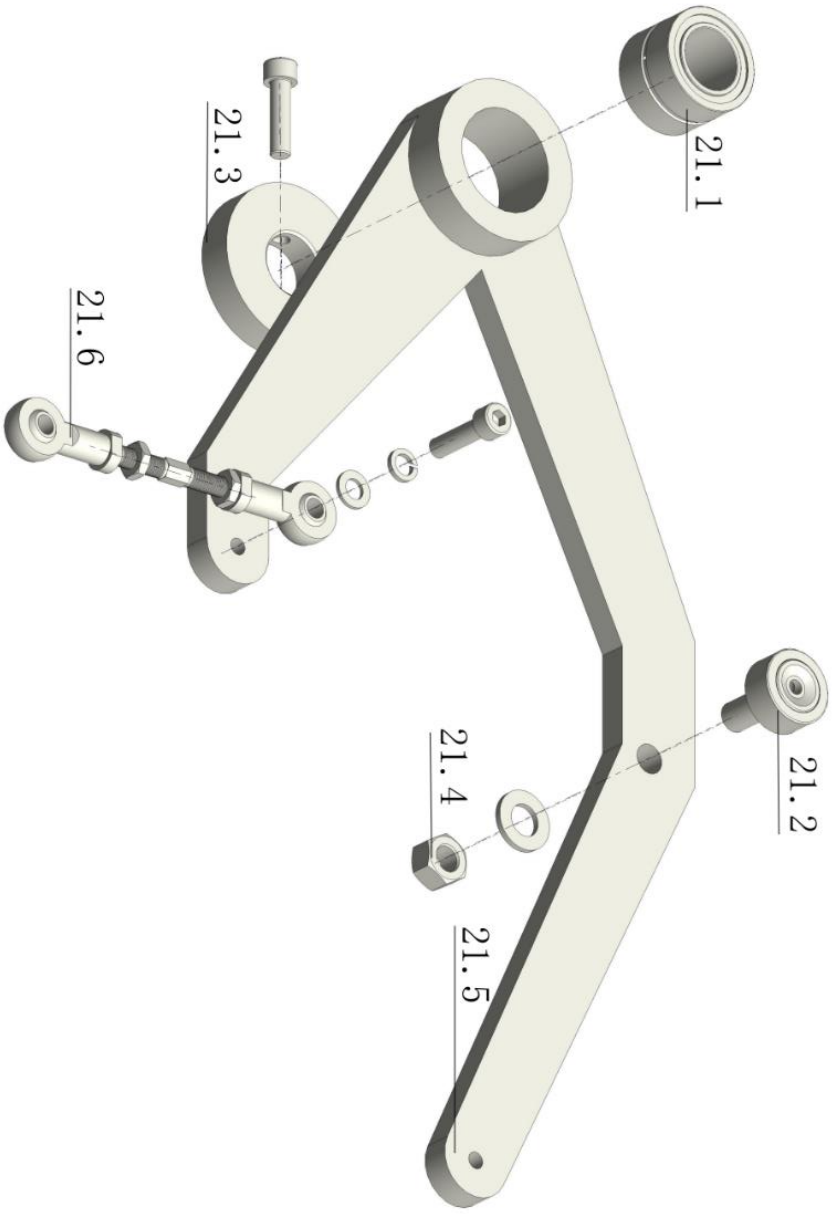
21.1
21.3
21.6
21.2
21.4
21.5