Bruciatori Santin

Brass Spouts Nozzle mix

[Bulletin 120-1 BS – 28/10/16]

MADE IN ITALY

Incorrect installation, adjustment, or misuse of this burner could result severe personal injury, or substantial property damage.

To the Equipment Owner:

- Please read and carefully follow all instructions provided in this manual regarding your responsibilities in caring for your heating equipment.
- Contact a professional, qualified service technician for installation, start-up or service work.
- Save this document for future reference.

Santin
Bruciatori Industriali

GENERAL WARNING!

Only qualified staff properly trained for work on Bruciatori Santin equipment are authorized for regular burner system maintenance. Some local authorities require the personnel involved in maintenance, repair and inspection to be certified. Manipulating the safety devices can result in unsafe operation of the burner system, which can cause severe or even lethal injuries!

All personnel involved in the installation, integration, commissioning, maintenance, repair, inspection and operation of this burner system shall ensure that all the necessary health and safety requirements are fulfilled before commencing the work.

They should wear the appropriate personal protective equipment (PPE) together with – if applicable - required site-specific equipment.

This instruction manual must be stored in a place near the burner system and must be accessible for operators.

It is the responsibility of the company operating the machinery to keep an equipment history record of the integrated burner system, which is to include commissioning records with final settings, maintenance and inspection reports, as well as reports on modified settings and replacement of parts.

We advise to systematically add the above records to this instruction manual and keep the resulting binder (hardcopy) or folder (electronic) accessible for operators and service technicians.

Integrating the burner system into an overall installation according to assembly instructions and the instructions in this manual neither eliminates nor mitigates potential residual risks.

General residual risks are described in the assembly instructions.

Safety devices:

- All safety devices must always be in perfect and operative condition.
- Qualified staff must regularly check the safety devices to ensure that they are fully functional.
- Never deactivate any of the safety devices on the burner system.
- All safety devices must be in full working order before starting the burner system for the first time.
- Do not start up the burner system if any safety device is defective.
- Stop the burner system if a safety device fails during operation and restart it only after the safety device has been repaired.
- Wait until the burner system has been shut down and secured before removing any safety devices.

Dimensioni e Specifiche
Dimensions and Specifications

Gas Fuel	Metano / GPL /altro Natural gas / LPG / Others
Dimensione filetto Size of thread	Supporto 1/8 gas vedere scheda composizione Brass support 1/8 gas, see mechanical composition
Dimensioni mm Dimensions mm	Vedere immagine sotto See picture below
Capacità Kcal/h (kW/h) Capacity Kcal/h (kW/h)	Aria aspirata 1200 (1,40) – Aria forzata 1500* (1,74) Atmospheric BS 1200 (1,40) – With air 1500* (1,74)
Materiale Material	Ottone Brass
Peso (kg) Weight	0,2

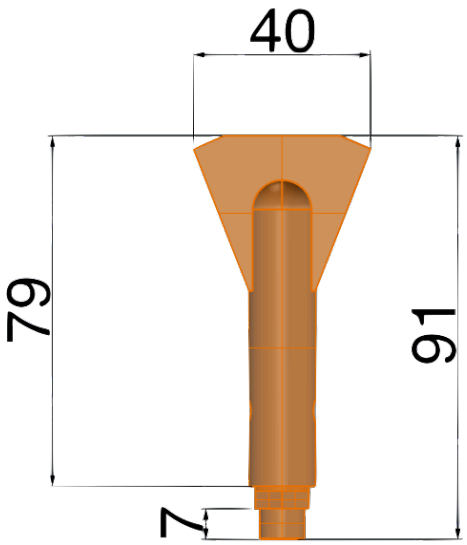

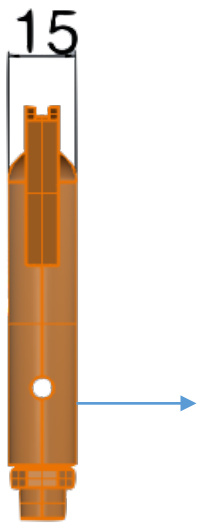

Holes are only for atmospheric solutions

Description

BS BRASS SPOUT nozzle is composed of three pieces, a brass spout, brass nozzle and brass support with 1/8 gas connection.

BS BRASS SPOUTS nozzle are used in any applications where there a not exposed to high ambient temperature (Max 300°C).

BS BRASS SPOUTS allow to develop any shape of burner required and they have high capacity and good turn down.

BS BRASS SPOUT nozzle is mostly used in low temperature applications as food furnaces, tank heaters, kettles, small boilers, ovens, coffee roaster machines and in any pre-heating applications when large number of small flames are needed.

CAUTION: It is dangerous to use any fuel burning equipment unless it is equipped with suitable flame sensing devices and automatic fuel shut-off valves.

Mechanical construction

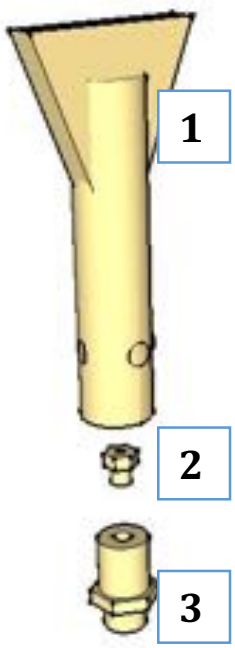

1	Brass spout
2	Nozzle
3	Support 1/8 gas

Technical data

The capacity 1,74 Kw indicated in the table below is based on 2,94 mbar of mixture pressure.
P.N. do not use mixture pressure more than 5,20 mbar
For other mixture pressure see the chart below:

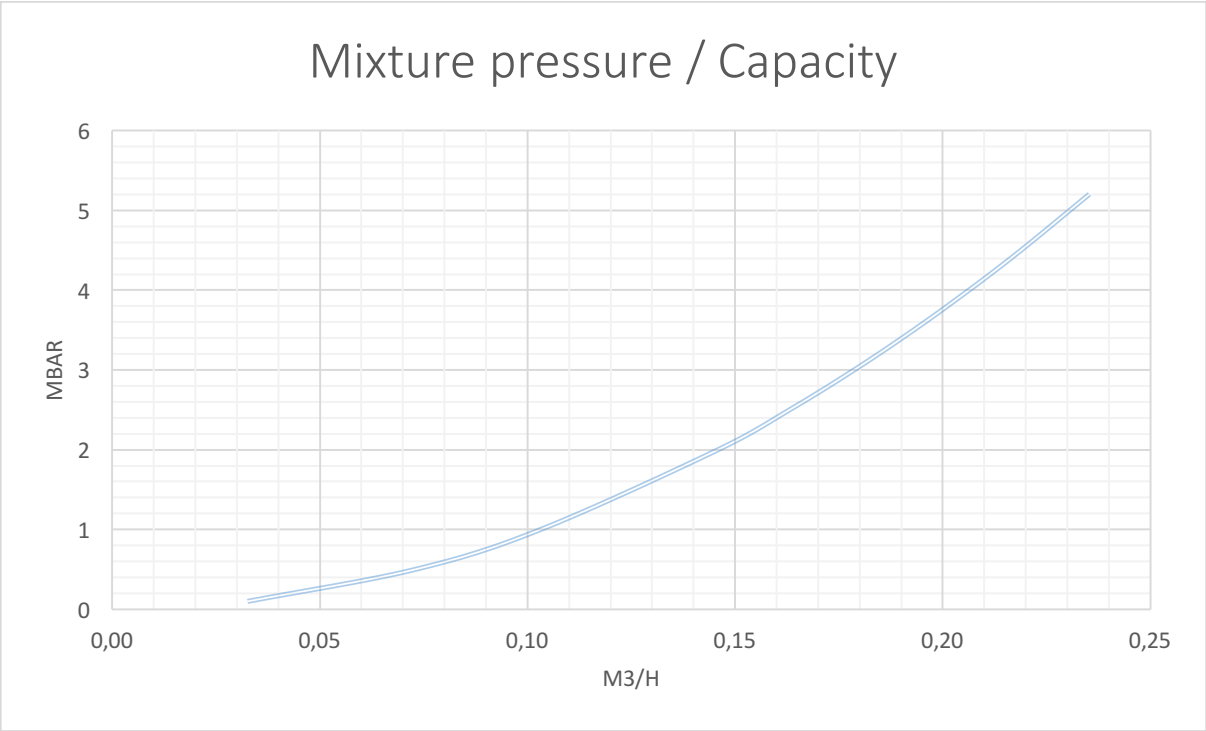

BS are also used in atmospheric applications with the following data:

	Gas nozzle mm	Air holes mm	Gas type
BS	1,1	5	Natural gas
BS	0,65	5,75	LPG (50% butane 50% propane)

Tip

In the table below in indicated the amount of total mixture that can be handled by various pipe sizes based on velocity pressure of about 10 mbar which is usually satisfactory.

Pipe size inches	1	1-1/2	2	2-1/2	3	4	5	6
Mixture m3/h	22	60	100	155	224	364	840	1400

Typical installation

BS BRASS SPOUTS nozzles are used to develop special burners for custom applications. BS are mostly mounted in a long pipe or short pipe in different shapes and capacities.

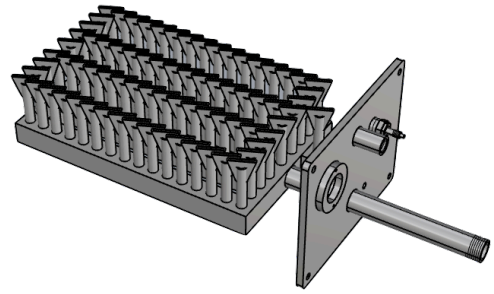

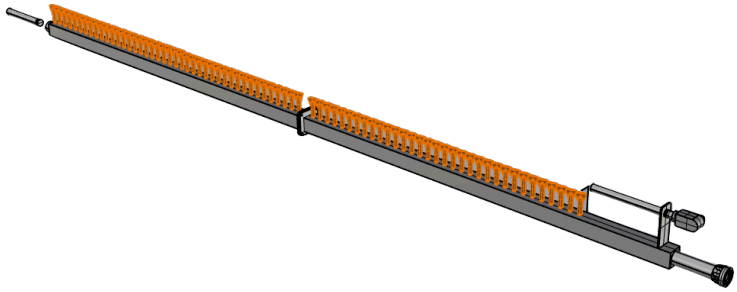

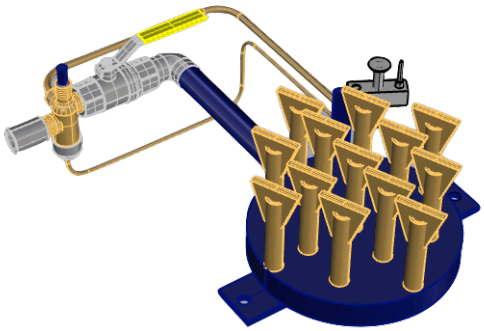

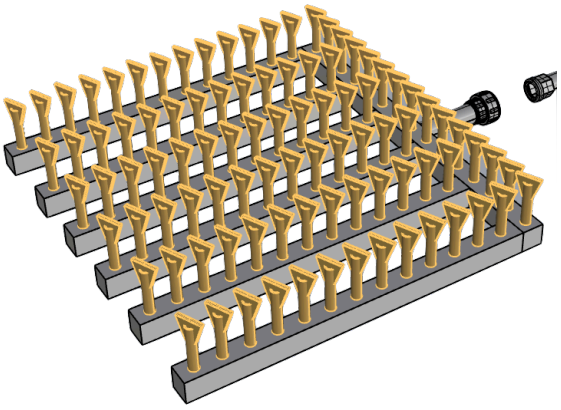

BS can be mounted in the following orientation:

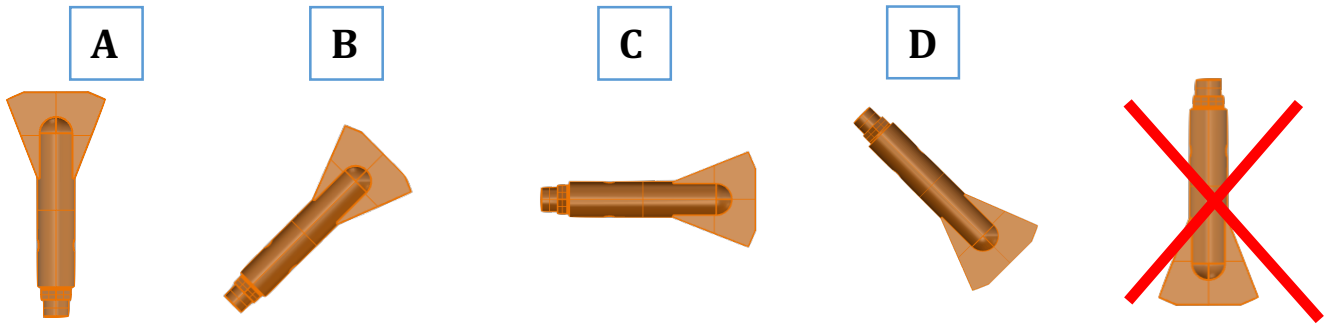

0° 45° 90° 135° Not allowed

A. Correct position for atmospheric solution and BS with blower
B. Correct position for atmospheric solution and BS with blower
C. Correct position for BS with blower – NOT ALLOWED for atmospheric BS
D. Correct position for BS with blower – NOT ALLOWED for atmospheric BS

Unless tips are very close together and a fast burning gas is being used, each tip must be lit individually. This may be done by a manual torch. Follow the instruction below to ignite the BS together:

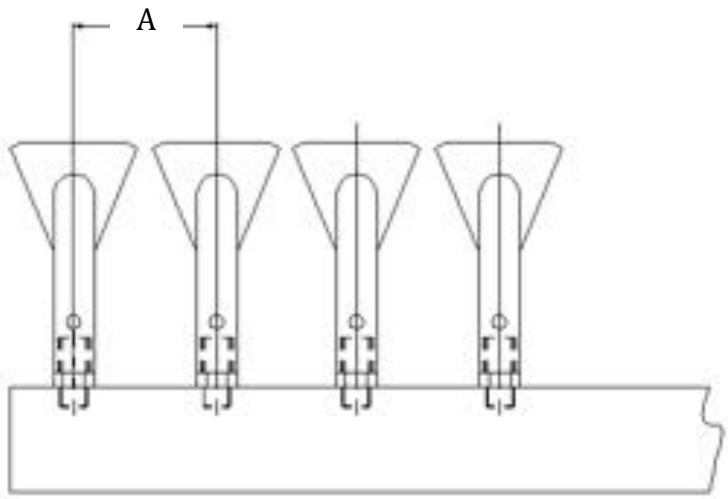

	A min	A max
BS atmospheric	25 mm	40 mm
BS with blower	20 mm	40 mm

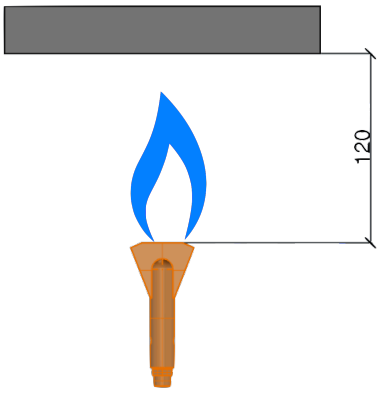

In order to get max performance from BS, the spouts must be placed 120 mm away from the surface.

Pilot

BS Brass Spouts do not have pilot burner. They can be lighted in the followings modes:

I. With hand torches.
II. With automatic pilot with blower PS22 (we suggest to use UV sensor as flame detection)
III. With automatic atmospheric pilot (we suggest to use UV sensor as flame detection)
IV. With Sit pilot
V. Without pilot with direct ignition on BS.
VI. Using one BS as pilot

I

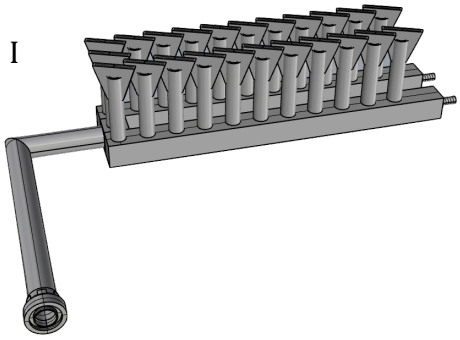

II

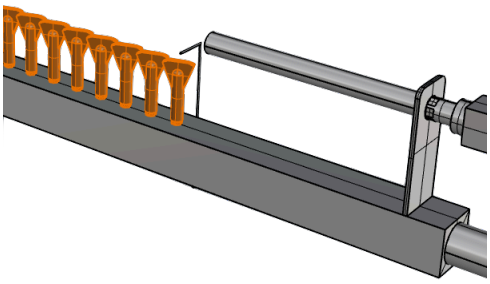

III

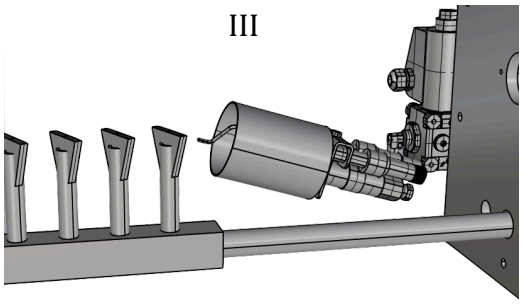

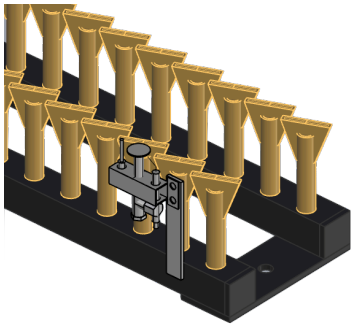

IV

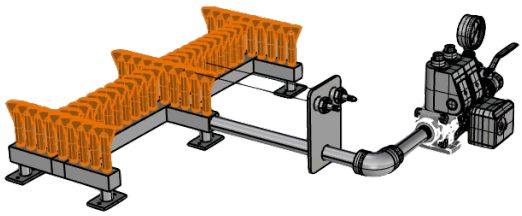

V

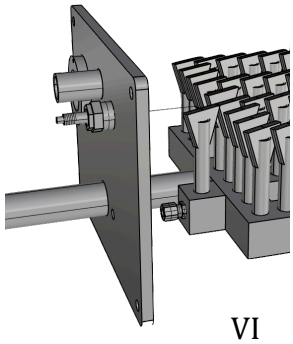

VI

Burner control

These burners can work with on-off, min/max and modulating system using atmospheric or air/gas Bruciatori Santin mixer.

BS BRASS SPOUTS nozzle burners can be equipped with flame rod, UV sensor or thermocouple.

Burner system must be equipped with suitable safety equipment comply to EN 746-2 and/or other applicable local codes or standards as NFPA86.

Ignite the system with ignition transformer 7,5/8 KV.

Piping tips

The pipe connection is a critical choice. The following suggestions can help you:

- Ensure that size of air and gas pipe are large enough to avoid excessive pressure loses.
- The number of elbows is kept to a minimum.
- Flexible pipe can cause more pressure drop than standard pipe. Check flexible detail.
- Put in a pipe union in a burner can simplify maintenance service.

Electrical tips

Electrical wiring must comply all applicable local standards as: CEI EN 61439-1

Start & Stop procedures

1. Close all gas valves
2. Start combustion air blower (only for BS with blower)
3. Set high fire according to the mixer and devices installed
4. Set low fire according to the mixer and devices installed
5. Check that every part of the burner is in a good condition

Caution! Do not turn off the blower until the chamber temperature is below 80°C.

List of common issues

Problem	Possible Cause	Possible solution
Burner does not start	There is incorrect power supply The spark electrode is dirty The spark electrode is not grounded to the burner	Check the wiring diagram Clean the spark electrode Clean the spark electrode
Burner has an insufficient flame signal	UV or flame sensor are dirty Flame sensor is grounded to the burner	Clean the flame sensor Check and adjust the position of ceramic insulation
Flame too long or short	Incorrect air / gas ratio	Adjust ratio mixer
Backfires	Mixture pressure High temperature in the chamber	Adjust ratio mixer Protecting the burner

Maintenance

An accurate maintenance program extends the life of the machine and assures high performance. The general cleaning of the machine represents a very important security factor together with the compliance of the following instructions:

WARNING

We suggest checking yearly the parts in the list below. If the environment is dirty the check must be monthly.

Leak test on gas train.
Check the correct operation of control unit sequence and all alarm system.
Check gas and air pressure switches.
Check flame rod and ignition electrode conditions.
Control air and gas ratio
Test valves and solenoids.
Visual check of cable and gas/air connections.
Control the flame thought the pipe sight in order to control the flame conditions.
Control all components and clean / replace if necessary.

Storage

If the machine has to be stored for a considerable period of time, it has to be protected from humidity and dust. Wrap up with plastic material for better isolation.

Packaging Solutions

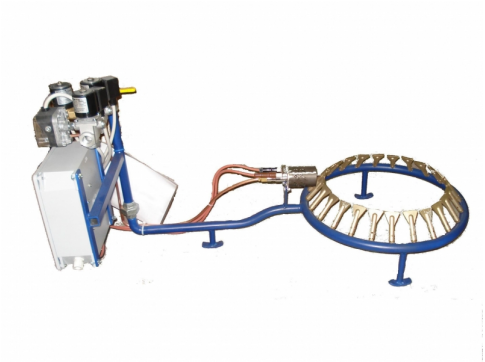

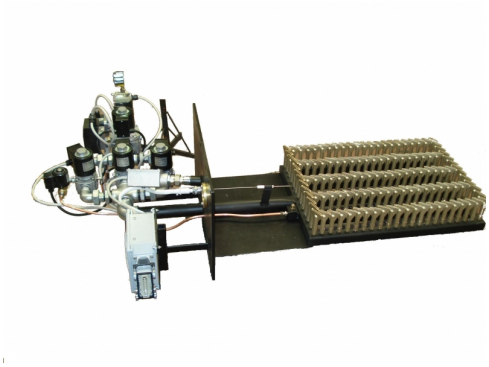
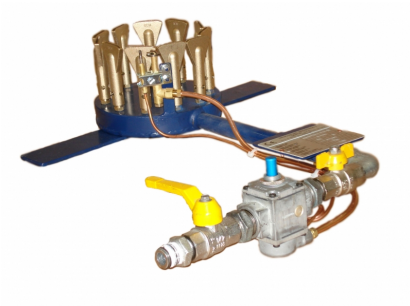


Bruciatori Santin develops complete combustion BS systems with command panel in different shapes and capacities according to the customer needs.

BS BRASS SPOUTS get different names according to operation modes:

- BBA (atmospheric) custom shape and capacities is an automatic model available one-stage, two-stages or modulating
- BLOS (atmospheric) custom shape and capacities available semi-automatic or manual modes
- FB (atmospheric) with standard shape and models available manual, semi-automatic or automatic modes.
- BBA MIX (with blower) custom shape and capacities is an automatic model available one-stage, two-stages or modulating
- BLO MIX (with blower) custom shape and capacities available semi-automatic or manual modes

BBA and BLOS are available with custom mounting plate or brackets.

See our general catalogue for more information.

- Bruciatori Industriali Santin riserva il diritto di modificare e variare i prodotti senza obbligo di notifica.
- Tutti di dati / grafici indicati e presentati in questo documento sono approssimativi.
- The performances mentioned are indicative. Performance and dimensions are guidelines only. The information contained in this catalogue is updated at the time of printing but can be changed without notice or obligation to notify.
- All data / graphs shown in this document are approximate.

Contatti:
Contacts:

Commerciale/Sales: alessandro@bruciatorisantin.com
Tecnico/Technical: tecnico@bruciatorisantin.com
Tel./Phone. +39 02 99813074
Fax. +39 02 99814391