20W Dual Output Series - with approval

- Universal AC input / full range
- High reliability
- Approvals: ETS/EMC/ CE
- 100% full load burn-in test
- Protections: overload/ over voltage/ short circuit
- V1 is isolated from the other output
- 2 years warranty
- F602 111 x 78 x 36(mm)

AC input voltage range ..... 85~264VAC (120~370VDC)
Inrush current ..... cold start, 15A/115V, 30A/230V
Input leakage current ..... ＜0.5mA/ 230VAC
Line regulation (full load) ..... ≤±0.5%
Load regulation ..... V_1: ≤± 0.5%, V_2: ≤± 3% (with regulator);
≤±6% (without)
Output voltage adjust range ..... V_1: ± 5% of rated output voltage
Output overload protection ..... 110~150%
Output over voltage protection ..... 115~150%
Withstand voltage ..... I/P -O/P: 3.0KVAC/1min;I/P -F/G: 1.5KVAC/1min
O/P-F/G: 0.5KVAC/1min
Rise, Hold up time ..... 50ms, 20ms@full load (typical)
Operating temp. & humidity ..... -10℃~+50℃, 20%~93%RH (non condensing)
Storage temp. & humidity ..... -20℃~+85℃, 20%~95%RH (non condensing)
Safety standards GB4943, UL60950, EN60950
EMC standards ..... GB9254, EN55022 classB, EN55024
EN61000-3-2,3, EN61000-4-2,3,4,5,6,8,11
Cooling method ..... convection

Model	DC Output		R&N	Efficiency
HF20W-DL-A	5V	0.4~3.0A	50mV	69%
	5V	0.2~1.5A	50mV	
HF20W-DL-B	5V	0.4~3.0A	50mV	70%
	12V	0.0~1.0A	80mV	
HF20W-DL-C	5V	0.4~3.0A	50mV	71%
	15V	0.0~1.0A	80mV	
HF20W-DL-D	5V	0.4~3.0A	50mV	72%
	24V	0.1~0.7A	100mV	
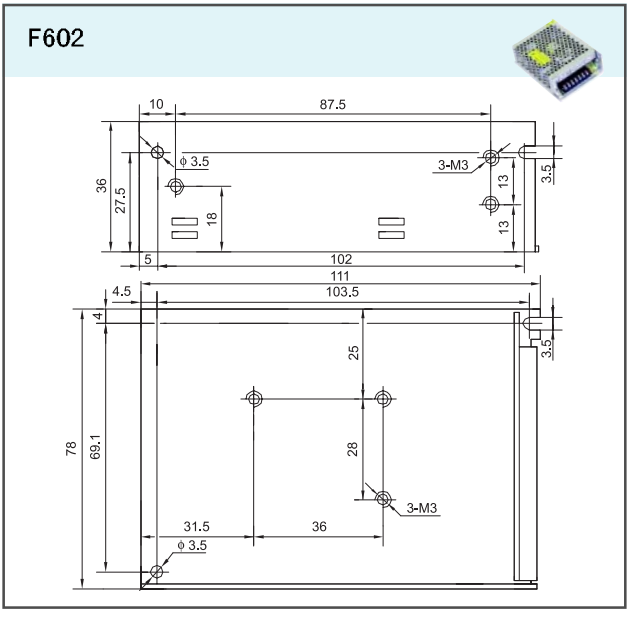
Drawing