125W Dual Output M2 Series

- Miniature size, high power density
- AC input range selected by switch
- High reliability
- Protections: overload/ over voltage/ short circuit
- 5 years limited warranty
- F610 199 × 98 × 39(mm)

CE

AC input voltage range.....85~132/ 176~264VAC selected by switch
Input frequency.....47~63Hz
Inrush current .....cold start, 20A/115V, 40A/230V
Input leakage current.....＜1mA/ 230VAC
Voltage tolerance.....V_1: ≤±1%, V_2: ≤±10%
Output voltage adjust range .....V_1:±5% of rated output voltage
Output overload protection .....105~130%, shut off, re-power on to recover
Output over voltage protection .....115~150%, shut off, re-power on to recover
Withstand voltage.....I/P -O/P: 3.0KVAC/1min
I/P -F/G: 1.5KVAC/1min
O/P-F/G: 0.5KVAC/1min
Rise time.....50ms@full load (typical)
Hold up time .....20ms@full load (typical)
Operating temperature .....-20℃~+50℃
Safety standards.....meet GB4943, UL60950, EN60950
EMC standards.....meet GB9254, EN55022 classB, EN55024
EN61000-3-2,3, EN61000-4-2,3,4,5,6,8,11
Cooling method .....convection

Model	DC Output		R&N	Efficiency
HF125W-DSM-A	5V	2.0~15A	100mV	82%
	12V	0.5~10A	120mV	
HF125W-DSM-B	5V	2.0~10A	100mV	82%
	24V	0.4~5.0A	150mV	
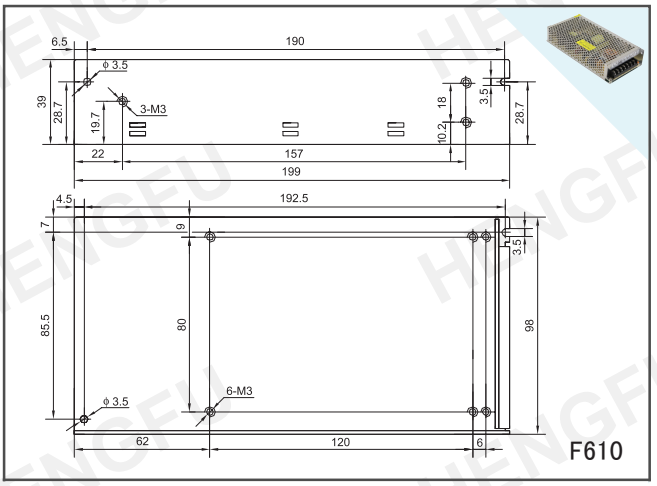
Drawing