100W Triple Output Series - with approval

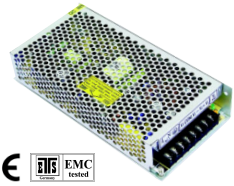

- AC input range selected by switch
- Approvals: ETS/EMC/ CE
- 100% full load burn-in test
- Protections: over current/ over voltage/ short circuit
- V1 is isolated from the other outputs
- 2 years warranty
- F610 199 x 98 x 39(mm)

AC input voltage range ..... 85~132/ 170~264VAC selected by switch
Inrush current ..... cold start, 20A/115V, 40A/230V
Input leakage current ..... ＜0.7mA/ 230VAC
Line regulation (full load) ..... ≤±0.5%
Load regulation ..... V_1: ≤± 0.5%, V_2,V_3: ≤± 3%
Output voltage adjust range ..... V_1: ± 5% of rated output voltage
Output over current protection ..... 110~130%
Output over voltage protection ..... 115~150%
Withstand voltage ..... I/P -O/P: 3.0KVAC/1min
I/P -F/G: 1.5KVAC/1min
O/P-F/G: 0.5KVAC/1min
Rise, Hold up time ..... 50ms, 20ms@full load (typical)
Operating temp. & humidity ..... -10℃~+50℃, 20%~93%RH (non condensing)
Storage temp. & humidity ..... -20℃~+85℃, 20%~95%RH (non condensing)
Safety standards GB4943, UL60950, EN60950
EMC standards ..... GB9254, EN55022 classB, EN55024
EN61000-3-2,3, EN61000-4-2,3,4,5,6,8,11
Cooling method ..... convection

Model	DC Output		R&N	Efficiency
HF100W-TF-A	5V	2.0~12.0A	80mV	73%
	12V	0.0~2.50A	100mV	
	-12V	0.0~1.50A	100mV	
HF100W-TF-B	5V	2.0~12.0A	80mV	74%
	15V	0.0~2.50A	100mV	
	-15V	0.0~1.50A	100mV	
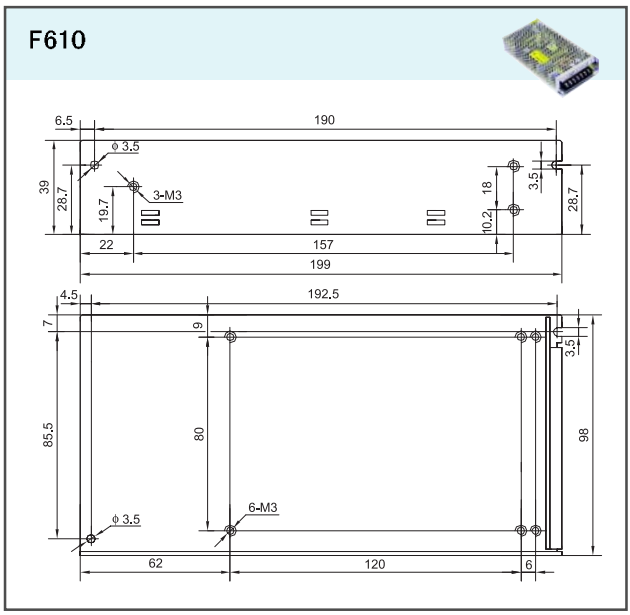
Drawing