30W DC/DC Series

- High reliability
- Built-in EMI filter
- 100% full load burn-in test
- Protections: overload/ short circuit
- 1 year warranty
- F603 129 x 98 x 40(mm)

DC input voltage 12VDC, 24VDC, 48VDC, 110VDC
Line regulation (full load) ..... ≤±0.5%
Load regulation ..... V_1: ≤± 0.5%, V_2,V_3: ≤± 3% (with regulators);
≤±6% (without)
Output voltage adjust range ..... single output:± 10%, multi-output:V_1:± 5%
Output overload protection ..... 110~150%
Withstand voltage I/P-O/P:1.0KVDC/1min;I/P-F/G:1.0KVDC/1min
O/P-F/G: 0.5KVDC/1min
Isolation resistance ..... ＞100MΩ@500VDC
Operating temp. & humidity ..... -10℃~+50℃, 20%~90%RH (non condensing)
Storage temp. & humidity ..... -20℃~+85℃, 20%~95%RH (non condensing)
Safety standards ..... design refer to LVD
EMC standards ..... design refer to EN55022, EN61000-4
Cooling method ..... convection

Model	DC Output		R&N	Efficiency
HF30W-SD**-5	5V	6.0A	80mV	70%
HF30W-SD**-12	12V	2.5A	120mV	72%
HF30W-SD**-24	24V	1.3A	150mV	74%
HF30W-DD**-A	5V	0.5~4.0A	100mV	70%
	12V	0.0~1.5A	150mV	
HF30W-DD**-B	15V	0.2~1.5A	150mV	70%
	-15V	0.0~1.0A	150mV	
HF30W-TD**-A	5V	0.5~3.5A	100mV	67%
	12V	0.1~1.2A	150mV	
	-12V	0.1~0.8A	150mV	

**means DC input voltage, such as 12, 24, 48, 110, etc.
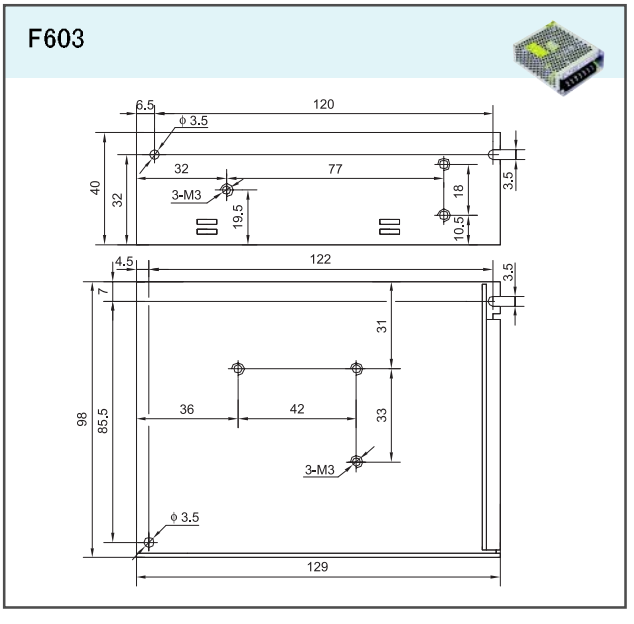
Drawing