FOR-1351 Rev.1.0

REVISION RECORD				
REV	ECN	DESCRIPTION	DRFT	DATE

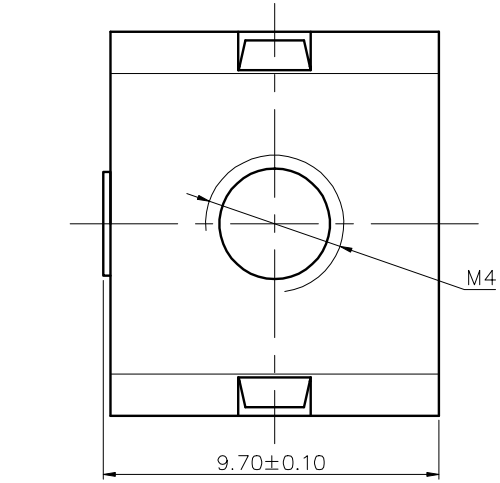

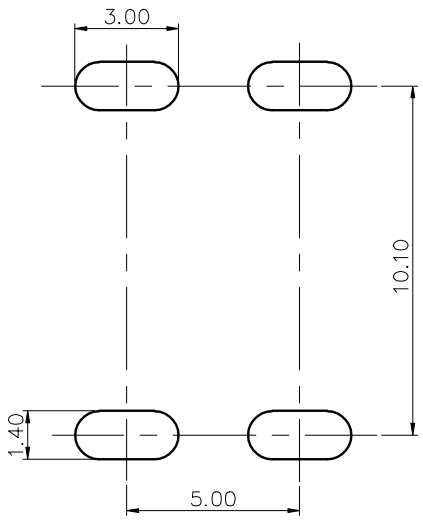

PCB LAYOUT

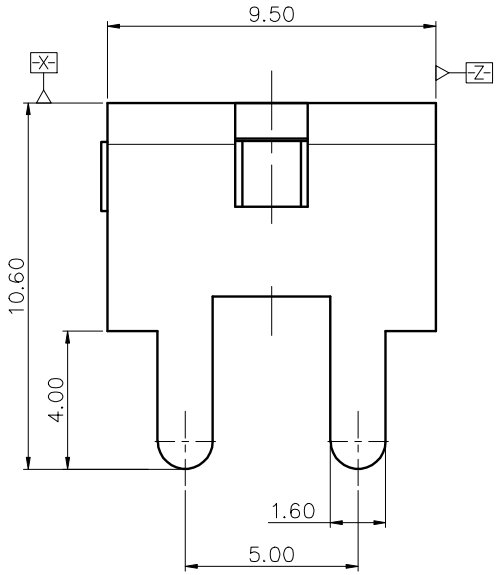

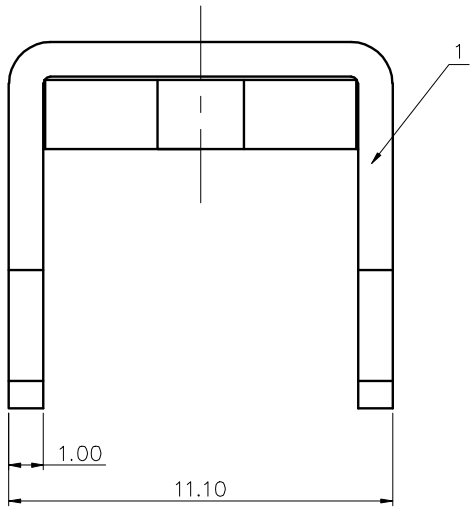

NOTES2:

1.Current : 60A

2.Torque value : M4 , 1.2N•m (10.53Lb.in,12.24kgf•cm)

3.Dimension shall be interpreted per ASME Y14.5-2009

4.Undimensioned tolerances:

Pitch range in mm			Nominal dimension range in mm					— ⌒ ▱
TO 6	Over 6 TO 10	Over 10 TO 24	TO 30	Over 30 TO 60	Over 60 TO 100	Over 100 TO 150	Over 150	0.1/10 ∠
±0.15	±0.20	±0.30	±0.30	±0.50	±0.70	±1.00	±1.30	±2°

5.RoHS Compliance

K40 – 00A (H)

(Series No.)

00A–(Standard)

(RoHS)

DETACHED LISTS				
PART NO.:	DEGSON® 宁波高松电子有限公司 NINGBO DEGSON ELECTRICAL CO., LTD			
APPD:	NAME: K40-00A(H)			
CHKD:				
DRFT:	TITLE: CUSTOMER DRAWING		REV	D0
THIRD ANGLE PROJECTION	DRAWING NO.: K40-C01		SHEET	1/1
	MM (INCH)	DO NOT SCALE DRAWING	SCALE	1:1