FOR-1351 Rev.1.0

Nominal dimension range in mm(GB/T 14486-1993-MT3/B)																									
0 to 3	over 3 to 6	over 6 to 10	over 10 to 14	over 14 to 18	over 18 to 24	over 24 to 30	over 30 to 40	over 40 to 50	over 50 to 65	over 65 to 80	over 80 to 100	over 100 to 120	over 120 to 140	over 140 to 160	over 160 to 180	over 180 to 200	over 200 to 225	over 225 to 250	over 250 to 280	over 280 to 315	over 315 to 355	over 355 to 400	over 400 to 450	over 450 to 500	0.1/10
±0.32	±0.34	±0.36	±0.38	±0.40	±0.44	±0.48	±0.52	±0.56	±0.60	±0.66	±0.72	±0.78	±0.84	±0.90	±0.98	±1.06	±1.12	±1.20	±1.30	±1.40	±1.50	±1.64	±1.80	±1.94	±2°

REVISION RECORD				
REV	ECN	DESCRIPTION	DRFT	DATE

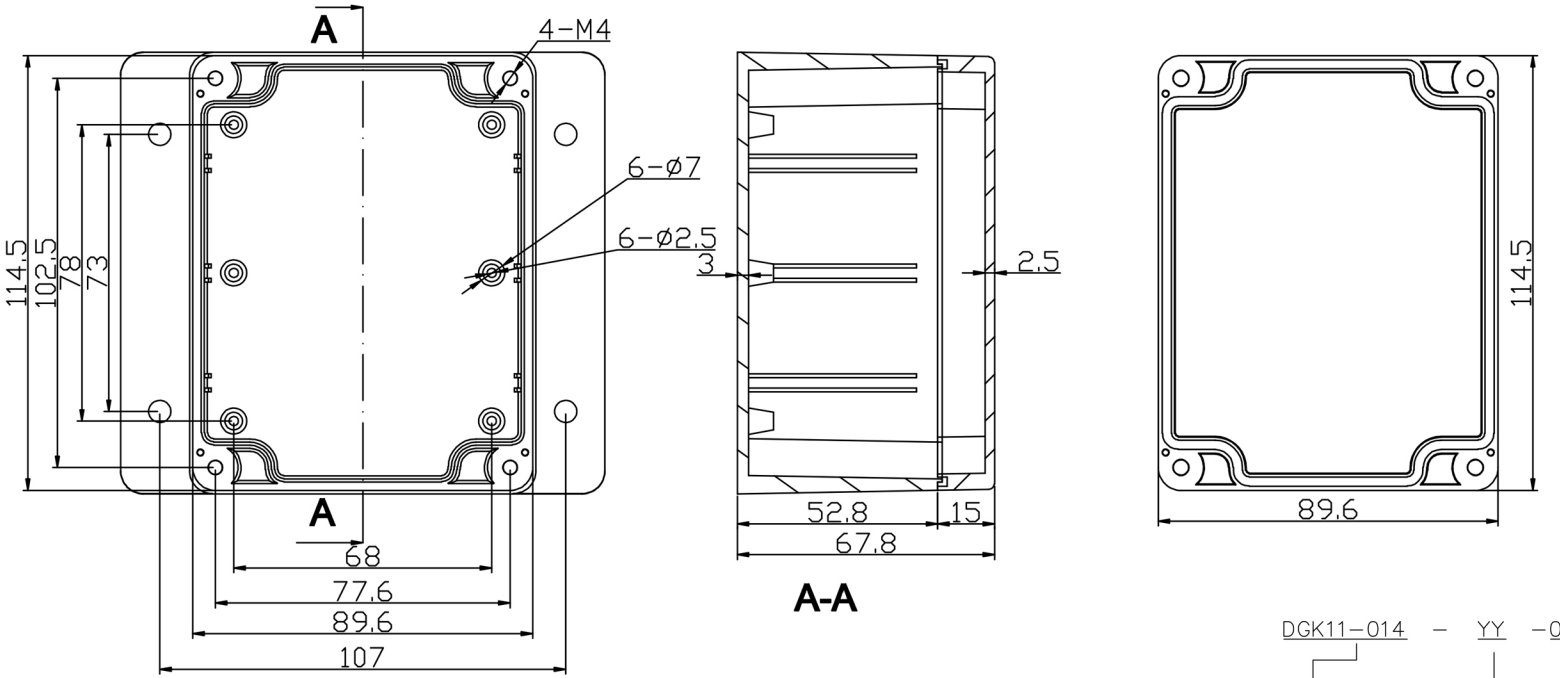

DGK11-014 - YY -00A (H)

(Series No.)

(Color):1.(Grey)
2.(Blue)
3.(Black)
4.(Green)
5.(Orange)
6.(Red)
7.(Transparent)
8.(Yellow)
9.(White)

(RoHS)

00A-(Standard)

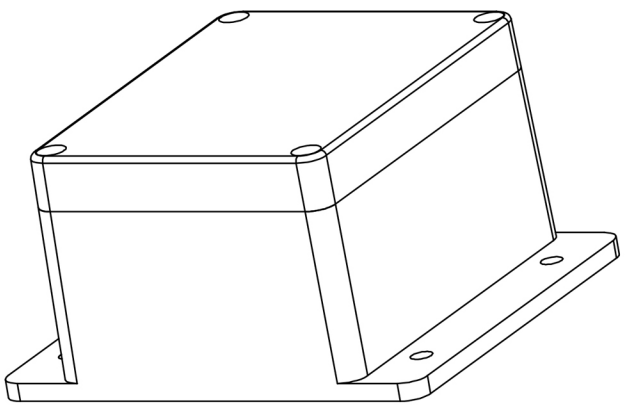

NOTES:
1.Dimension shall be interpreted per ASME Y14.5-2009
2..RoHS Compliance

	Housing	ABS	
PART NO.: /	DEGSON® 宁波高松电子有限公司 NINGBO DEGSON ELECTRICAL CO., LTD		
APPD:	NAME: DGK11-014-YY-00A(H)		
CHKD:			
DRFT: Apple 2016.07.13	TITLE: CUSTOMER DRAWING	REV	D0-1
THIRD ANGLE PROJECTION	DRAWING NO.: DGK11-014-C01	SHEET	1/1
	MM (INCH) DO NOT SCALE DRAWING	SCALE	/

DETACHED LISTS