SL2 stand setup instructions

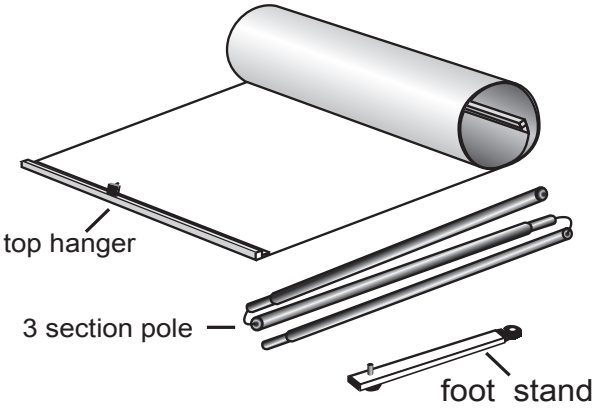

1. Remove graphic and parts from the case and roll the graphic out on the floor, image side down.

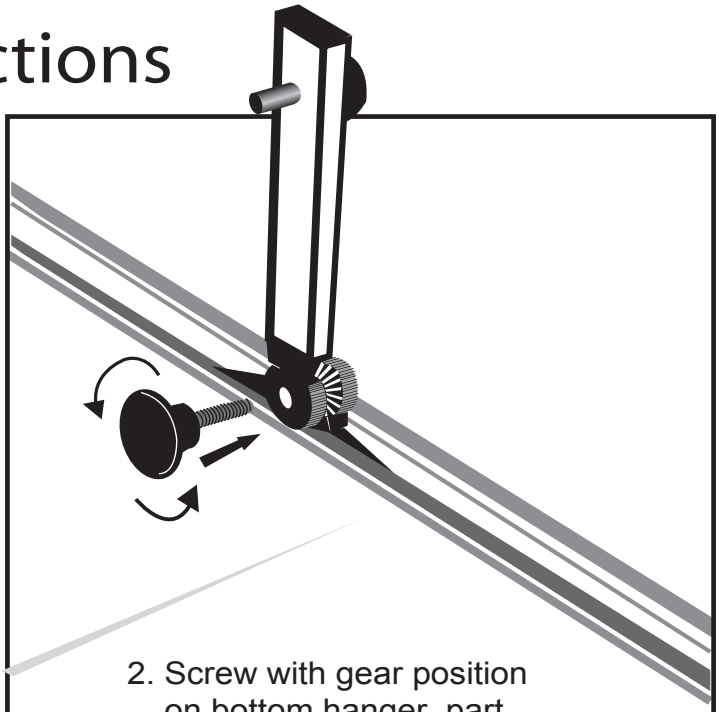

2. Screw with gear position on bottom hanger part

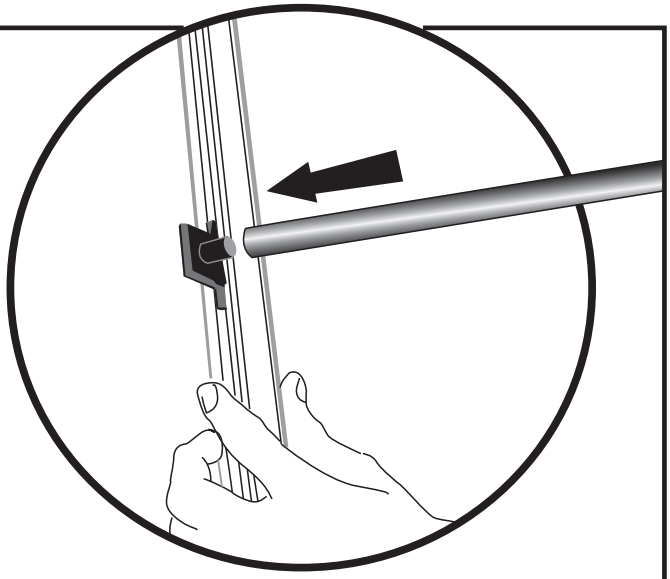

3.Put the 3 pole pieces together and fit top of the pole into the top hanger bar.

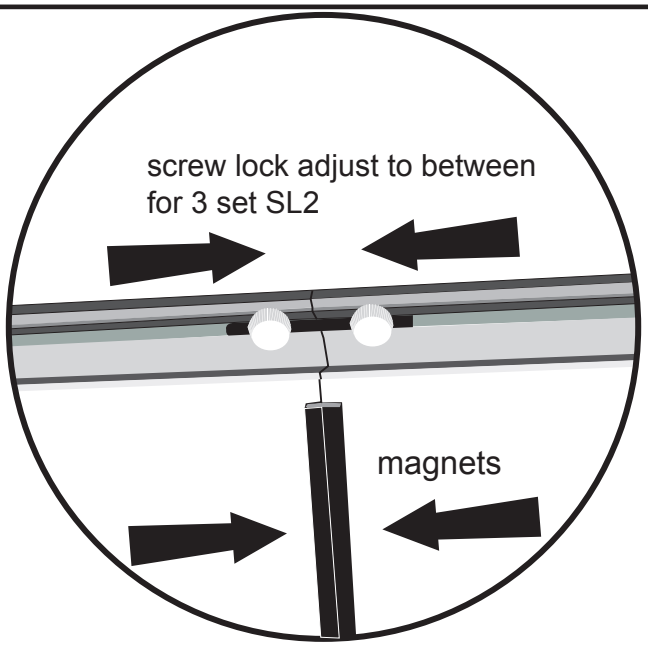

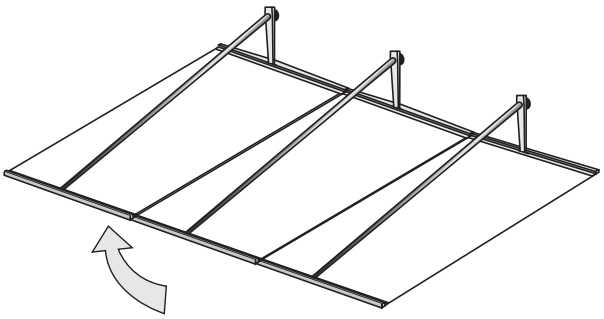

5. Rise the stand to an upright position by lifting the top hanger bar and place next to another SL2 (see pic 6).

The edge magnets will connect and minimal lineup adjustments may be necessary.

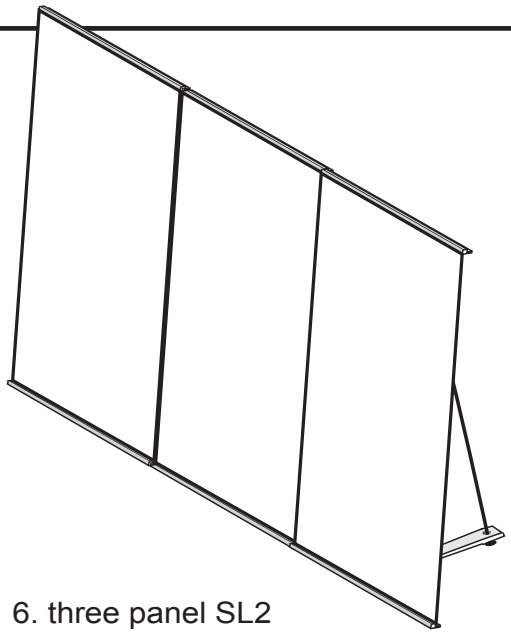

6. three panel SL2