Technical Manual

ACSON International
Air Conditioners

PACKAGED AIR CONDITIONER ROOFTOP C SERIES

ART - C series

Cooling only [50Hz]

R410A

TM-5FS-A-AM-A1

CONTENTS

PACKAGED AIR CONDITIONER ROOFTOP C SERIES

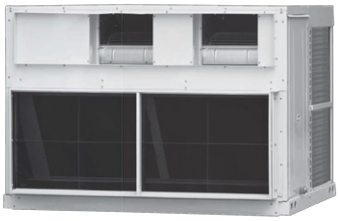

1. NOMENCLATURE — P.1
2. FEATURE — P.2
3. FAN PERFORMANCE CHART — P.5
4. FAN PERFORMANCE TABLE — P.9
5. ENGINEERING & PHYSICAL DATA — P.10
6. PERFORMANCE DATA — P.11
7. OUTLINES & DIMENSIONS — P.15
8. WIRING DIAGRAMS — P.17
9. INSTALLATION — P.21
10. SPECIFICATION GUIDE — P.23

* All specifications stated in this technical manual are for Cooling Only unit.
Please contact us for more information about Heat Pump unit.

DISCLAIMER

In complying with ACSON's policy for continuous product improvement, the information contained in this document is subject to change without notice. While ACSON makes no commitment to update or provide current information automatically to the manual owner, that information, if applicable, can be obtained by contacting the nearest ACSON Applied System office. It is the responsibility of operating/service personnel to verify the applicability of these documents to the equipment in question. If there is any question in the mind of operating/service personnel as to the applicability of these documents, then prior to working on the equipment, they should verify with the owner whether the equipment has been modified and if current literature is available.

⚠ **CAUTION**

HIGH VOLTAGE
is used in the operation of this equipment.
DEATH OR SERIOUS INJURY
may result if personnel fail to observe safety precautions.

Work on electronic equipment should not be undertaken unless the individuals(s) have been trained in the proper maintenance of equipment and is(are) familiar with its potential hazards.

Shut off the power supply to equipment before beginning work and follow lockout procedures. When working inside equipment with power off, take special care to discharge every capacitor likely to hold dangerous potential.

Be careful not to contact high voltage connections when installing or operating this equipment.

LOW VOLTAGE
DO NOT be misled by the term 'low voltage"
Voltages as low as 50 volts may cause death.

NOMENCLATURE

A RT 150 C - F X MC

PRODUCT SPECIFICATION GUIDE
MC: Revision

ADDITIONAL FUNCTION
X: Standard model

POWER SUPPLY SYMBOL
F: 3 Phase 50 Hz 380-415V

GENERATION/ SERIES
C: C series

CAPACITY INDICATION
150: 150,000 Btu/h

MODEL
RT: Rooftop

BRAND
A: Acson

Notes:
1. Capacity indication might differ with actual rated capacity.
2. Please refer to Engineering and Physical Data or Performance table for rated capacity for respective model.

FEATURES

Key Features

High Energy Efficiency

In line with the market trend of moving towards high energy efficiency products, the ART-C series is developed with the target of high EER.

Model	ART150C	ART180C
Gross EER @ 35°C (Btu/hr /W)	10.90	10.84

Model	ART240C	ART300C
Gross EER @ 35°C (Btu/hr /W)	10.61	10.40

Wide Operating Range

The ART-C series rooftops are specifically designed for High Ambient Application and capable of operating at an outdoor ambient of up to **54°C**.

Lightweight and compact

The lightweight and compact design of ART-C series allows for ease of transportation and installation.

Separate Service Panels

The unit is designed with two separate service panels for easy electrical box servicing.

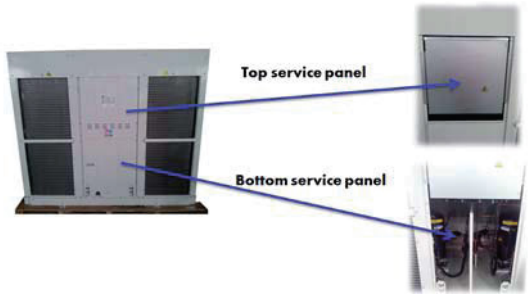

Independent Refrigerant Circuit

Each unit is designed with two independent refrigerant circuits, where user can control each individual system separately.

This also allows the unit to run at part load when lower cooling capacity is required.

Air Discharge and Air Return

The ART-C series is available in Horizontal Air Discharge only, designed with Air discharge on the top and return air on the bottom for easy duct design.

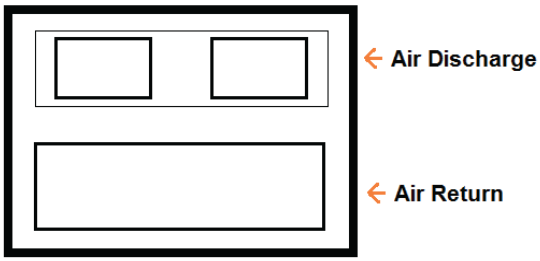

Component Features

Compressor

High efficiency, low noise, and hermitically sealed SCROLL compressors are used in the ART-C series to give a better performance.

All compressors are equipped with an internal overload protection. Crankcase heaters are installed as standard in each compressor.

Evaporator Coil

Evaporator coils are manufactured from seamless inner grooved copper tubes mechanically bonded to aluminium fins to ensure optimum heat transfer.

All coils are tested against leaks by Nitrogen holding at 609psig and highly precise Helium leak test at 235psig.

ALL standard coils are 3-4 rows / 14-16 FPI, 3/8" (9.52mm) O.D. tubes.

Evaporator Fan

The unit is designed with belt driven evaporator motor, which allows for change of pulley on site to accommodate different static pressure and air flow requirement.

Condenser Coil

Condenser coils are manufactured from seamless inner grooved copper tubes mechanically bonded to aluminium fins to ensure optimum heat transfer. All coils are tested against leaks by Nitrogen holding at 609psig and highly precise Helium leak test at 235psig.

ALL standard coils are up to 3 rows / 14-16 FPI, 3/8" (9.52mm) O.D. tubes.

Options:

Hydrophilic Gold Fin coating (NA549) condenser coil is offered as option, which has longer life span under corrosive environment.

Condenser Fan/Motor

Fans are of propeller type, direct driven by weatherproof electrical induction motors. Condenser fan motors are **rated IP55 protection index with class F insulation class** and is designed with **dust proof bearing** to ensure the reliability of the motor and smooth operation all year round.

Casing/Structure

The unit casing used in ART-C series is made of zinc coated galvanized steel sheets. It is further coated with an electrostatic powder coat, oven-baked for a tough and lasting weather resistant finish. Zinc plated screws are used to further reduce the possibility of unit rusting.

Refrigerant Circuit

The ART-C series is designed with the ability to operate at partial load depending on the requirement of the application.

Each refrigerant circuit has an independent **Thermal Expansion Valve (TXV), Filter Drier** and **High / Low Pressure Switch.**

Additional valves are provided for site installation of Pressure Gauge and Low Ambient Kit.

Filter

Saranet pre-filter is available as standard in the unit to prevent foreign particles entry into the unit.

A 2” filter rail is installed in the unit to accommodate additional site installed filter.

Electrical Control Panel

The control panel is protected by a panel cover to prevent nuisance changes by unauthorized personnel.

Microprocessor Based Control

The control system consists of a microprocessor controller and a user interface remote controller. The controller offers the following features:

- Built in anti recycle timer to prevent compressor short cycling
- Sequential control of compressor, condenser motor and evaporator motor
- Intelligent control to ensure balance usage of compressor in the system
- Auto random restart and memory backup of last setting in case of interrupted power supply
- Energy saving function
- Sensor fault indication

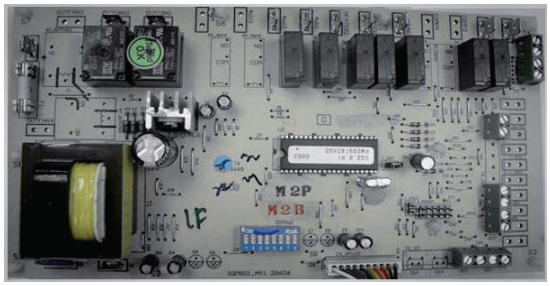

With the remote wired controller connected, the following features can be performed:

- Temperature setting
- 7 days programmable timer
- Error indication on the remote controller for easy troubleshooting

FAN PERFORMANCE CHART

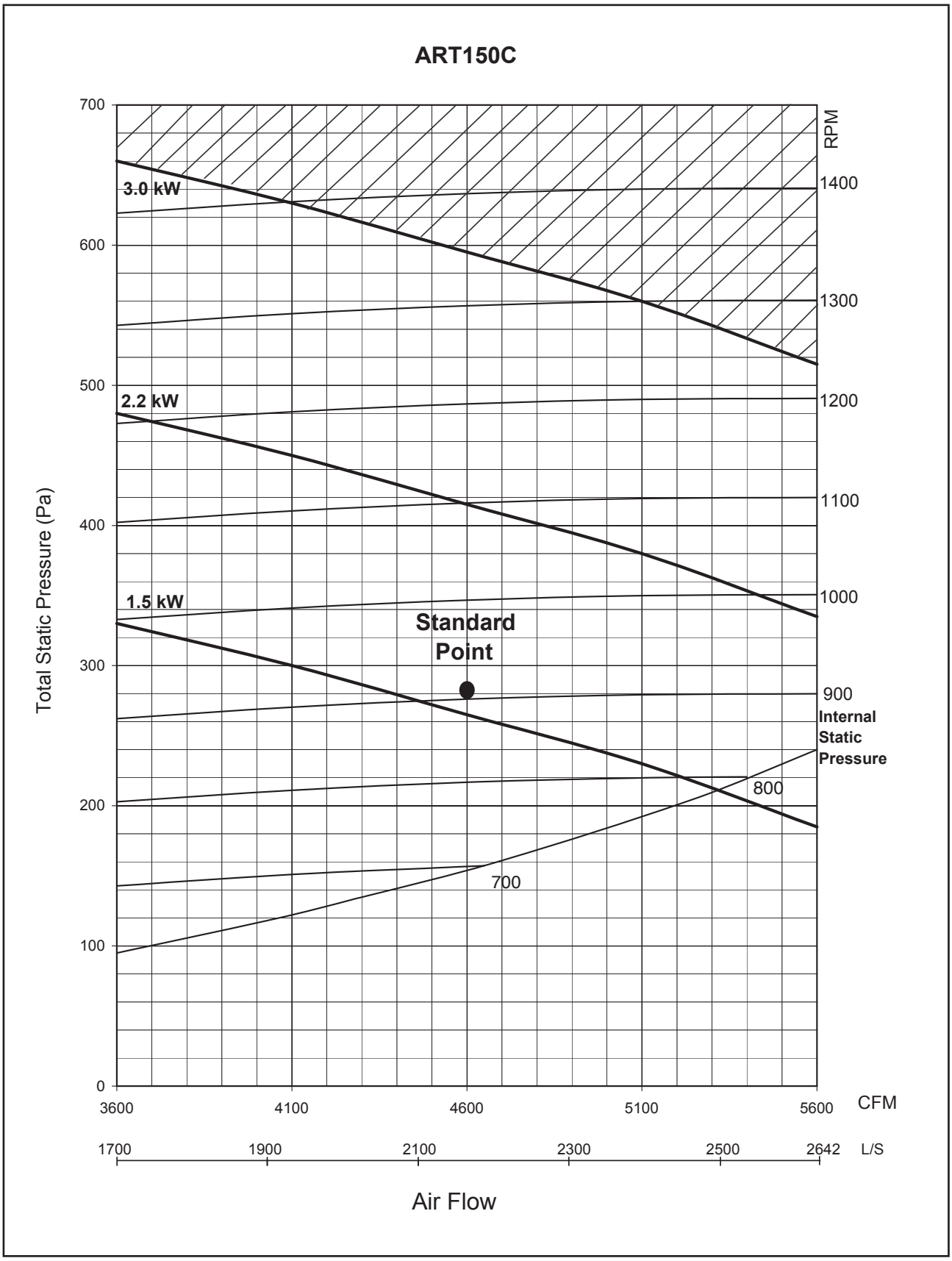

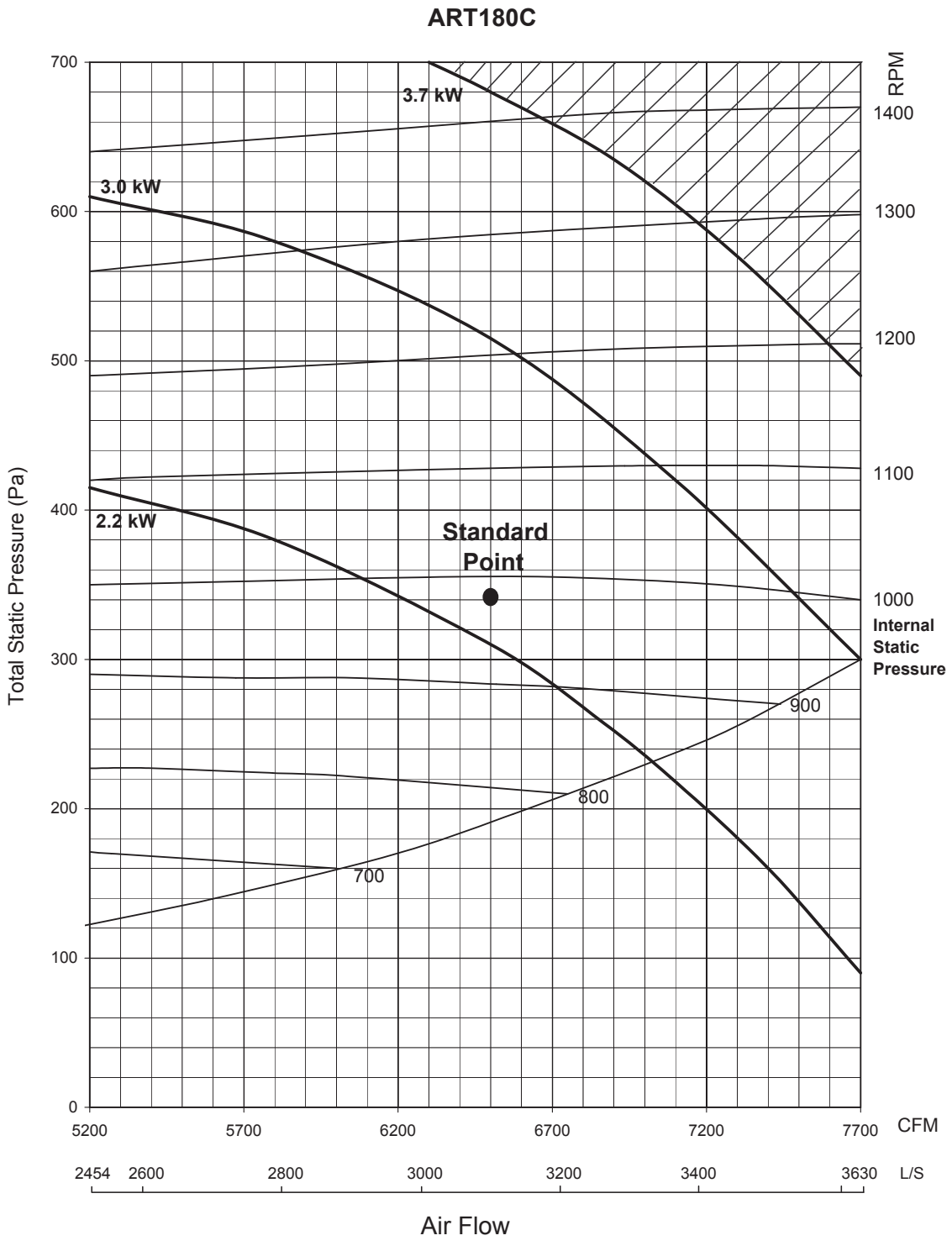
ART180C
Total Static Pressure (Pa)
700
600
500
400
300
200
100
0
3.7 kW
3.0 kW
2.2 kW
Standard Point
RPM
1400
1300
1200
1100
1000
Internal Static Pressure
900
800
700
5200
5700
6200
6700
7200
7700
CFM
2454
2600
2800
3000
3200
3400
3630
L/S
Air Flow

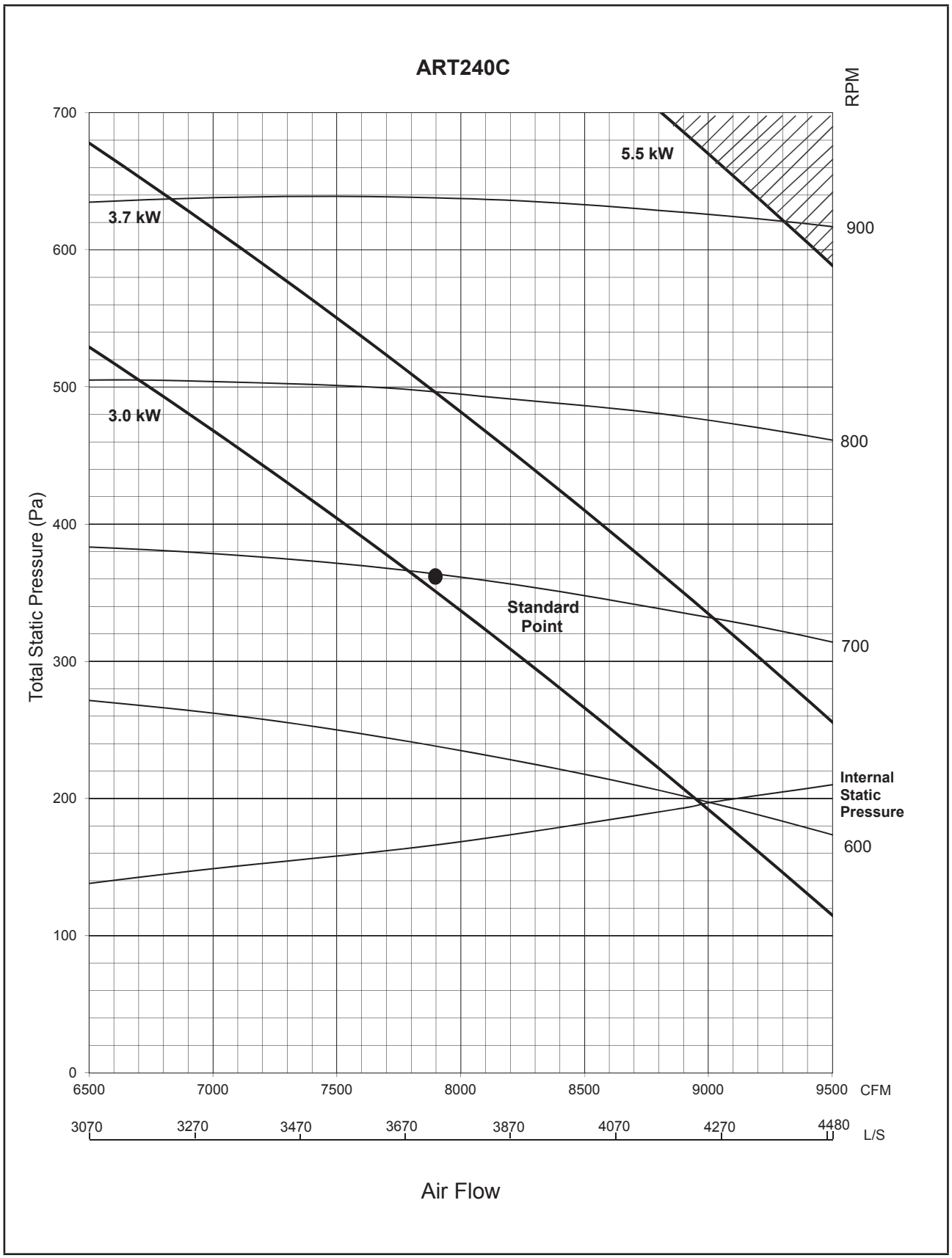
ART240C
RPM
5.5 kW
3.7 kW
3.0 kW
900
800
700
600
Standard
Point
Internal
Static
Pressure
Total Static Pressure (Pa)
700
600
500
400
300
200
100
0
6500
7000
7500
8000
8500
9000
9500
CFM
3070
3270
3470
3670
3870
4070
4270
4480
L/S
Air Flow

ART300C

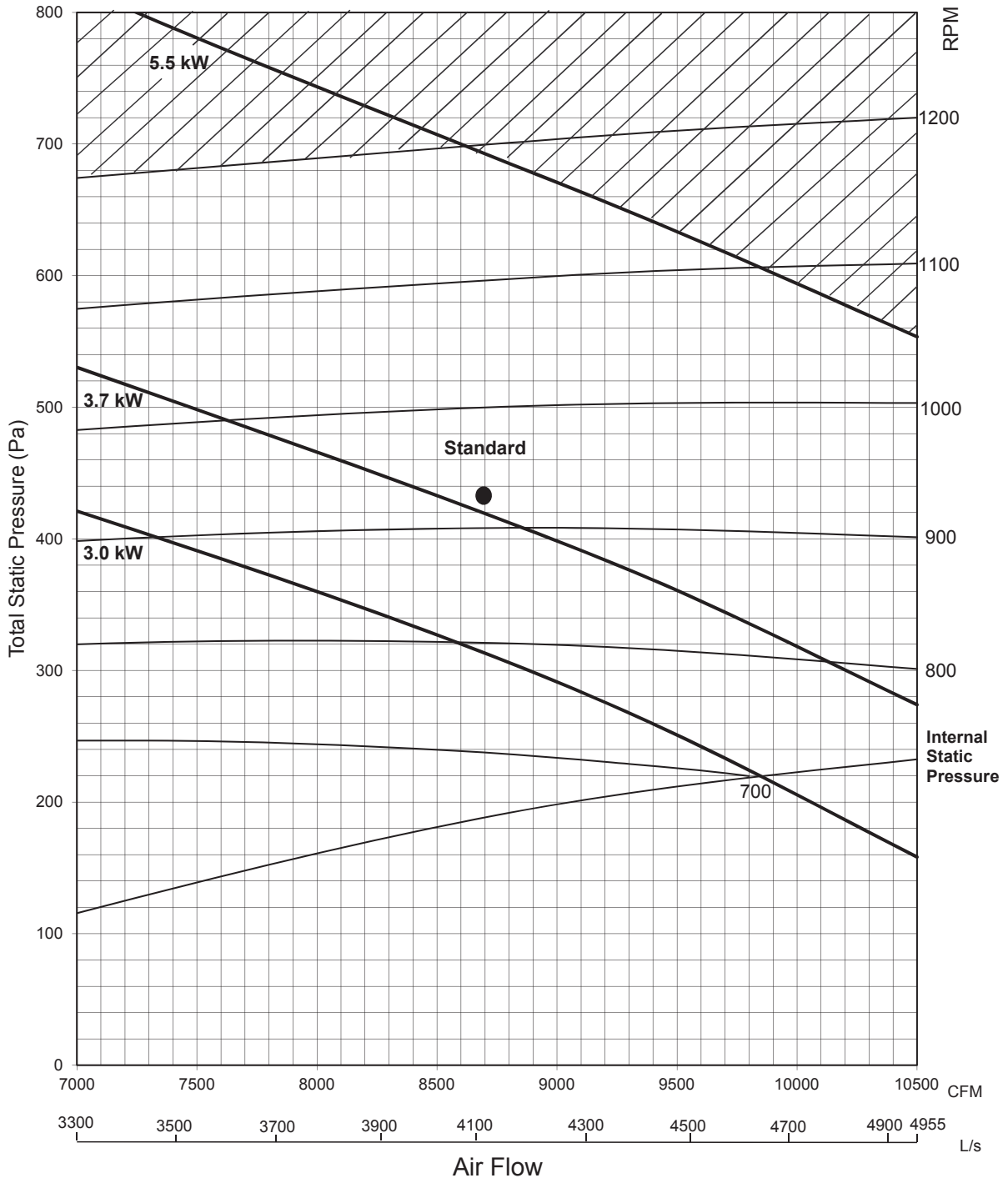
5.5 kW
3.7 kW
3.0 kW
Standard
Total Static Pressure (Pa)
800
700
600
500
400
300
200
100
0
RPM
1200
1100
1000
900
800
Internal Static Pressure
700
7000
7500
8000
8500
9000
9500
10000
10500
CFM
3300
3500
3700
3900
4100
4300
4500
4700
4900
4955
L/s
Air Flow

FAN PERFORMANCE TABLE

Model	Air Flow (CFM)	Fan Speed	ESP (mmH_2O/Pa)												Standard Point (Factory Setting)
			0/0	5/50	10/100	12.5/125	15/150	20/200	25/250	30/300	35/350	40/400	45/450	50/500	
ART150C	3600	RPM	650	710	795	840	880	950	1020	1120	1165	-	-	-	Air Flow = 4600 CFM ESP = 12.5/125 mmH_2O/Pa Fan Speed = 905
		Motor Output (kW)	1.5	1.5	1.5	1.5	1.5	1.5	2.2	2.2	2.2	-	-	-	
	4600	RPM	700	790	880	905	950	1020	1095	1150	1230	-	-	-	
		Motor Output (kW)	1.5	1.5	1.5	2.2	2.2	2.2	2.2	3.0	3.0	-	-	-	
	5600	RPM	820	910	990	1020	1090	1150	1230	-	-	-	-	-	
		Motor Output (kW)	2.2	2.2	2.2	3.0	3.0	3.0	3.0	-	-	-	-	-	
ART180C	5200	RPM	650	700	780	-	880	950	1040	1100	1180	-	-	-	Air Flow = 6500 CFM ESP = 15/150 mmH_2O/Pa Fan Speed = 980
		Motor Output (kW)	2.2	2.2	2.2	-	2.2	2.2	2.2	3.0	3.0	-	-	-	
	6500	RPM	770	820	910	-	980	1050	1110	1180	1240	-	-	-	
		Motor Output (kW)	2.2	2.2	2.2	-	3.0	3.0	3.0	3.0	3.7	-	-	-	
	7700	RPM	960	1010	1070	-	1030	1180	-	-	-	-	-	-	
		Motor Output (kW)	3.0	3.7	3.7	-	3.7	3.7	-	-	-	-	-	-	
ART240C	6500	RPM	470	520	570	-	615	660	705	750	790	830	865	900	Air Flow = 7900 CFM ESP = 20/200 mmH_2O/Pa Fan Speed = 700
		Motor Output (kW)	3.0	3.0	3.0	-	3.0	3.0	3.0	3.0	3.0	3.7	3.7	3.7	
	7900	RPM	540	580	620	-	660	700	740	780	815	850	890	920	
		Motor Output (kW)	3.0	3.0	3.0	-	3.0	3.7	3.7	3.7	5.5	5.5	5.5	5.5	
	9500	RPM	630	660	700	-	730	770	800	830	860	-	-	-	
		Motor Output (kW)	3.7	5.5	5.5	-	5.5	5.5	5.5	5.5	5.5	-	-	-	
ART300C	7000	RPM	-	580	660	-	730	790	860	920	980	1030	-	1140	Air Flow = 8700 CFM ESP = 25/250 mmH_2O/Pa Fan Speed = 930
		Motor Output (kW)	-	3.0	3.0	-	3.0	3.0	3.0	3.0	3.7	3.7	-	5.5	
	8700	RPM	640	700	760	-	820	870	930	980	1030	1080	-	1180	
		Motor Output (kW)	3.0	3.0	3.0	-	3.7	3.7	5.5	5.5	5.5	5.5	-	5.5	
	10500	RPM	730	780	830	-	880	930	980	1030	-	-	-	-	
		Motor Output (kW)	3.7	5.5	5.5	-	5.5	5.5	5.5	5.5	-	-	-	-	

Note:
1. Figures are for reference only.
2. indicates standard operating point.

Dimensional Data

Model	Blower Pulley, Db (mm)		Motor Pulley, Dm (mm)		V belt		Pulley Center Distance, C (mm)			Motor	
	Type	Dia (mm)	Type	Dia (mm)	Type	Length (mm)	Nom	Min	Max	kW	RPM
ART150C	SPZ 2	132	SPZ 2	75	SPZ	737	191	175	205	2.2	1420
ART180C	SPZ 2	160	SPZ 2	106	SPZ	812	191	191	210	3	1420
ART240C	SPZ 2	200	SPZ 2	95	SPZ	887	205	195	215	3.7	1430
ART300C	SPZ 3	150	SPZ 3	95	SPZ	900	256	210	280	5.5	1430

ENGINEERING & PHYSICAL DATA

Engineering Data – R22 Model

MODEL					ART150C	ART180C	ART240C	ART300C
COOLING CAPACITY [1]				Btu/h	142500	183500	244000	295000
				kW	41.76	53.78	71.51	86.46
COOLING CAPACITY [2]				Btu/h	124600	165100	216000	260700
				kW	36.52	48.39	63.31	76.41
TOTAL INPUT POWER (COOLING)				kW	13.07	16.92	23.00	28.36
TOTAL RUNNING CURRENT (COOLING)				A	24.8	31.3	40.0	53.2
REFRIGERANT CONTROL (EXPANSION DEVICE)					TXV			
REFRIGERANT CHARGE				kg	4.6 + 4.6	6 + 6	8 + 8	10.6 + 10.6
POWER SOURCE				V/Ph/Hz	380-415 / 3N~ / 50			
REFRIGERANT TYPE					R22			
EVAPORATOR	CONTROL	AIR DISCHARGE			DUCTED			
		OPERATION			WIRED CONTROL			
	AIR FLOW	HIGH		l/s / CFM	2173 / 4600	3068 / 6500	3729 / 7900	4101 / 8700
	EXTERNAL STATIC PRESSURE			Pa / in.wg.	125 / 0.5	150 / 0.6	200 / 0.8	250 / 1.0
	CONDENSATE DRAIN SIZE			mm / in	25.40 / 1	25.40 / 1	25.40 / 1	25.40 / 1
	FAN	TYPE			CENTRIFUGAL FORWARD CURVE	CENTRIFUGAL FORWARD CURVE	CENTRIFUGAL FORWARD CURVE	CENTRIFUGAL FORWARD CURVE
		DRIVE			BELT DRIVE	BELT DRIVE	BELT DRIVE	BELT DRIVE
	FAN MOTOR	TYPE			INDUCTION	INDUCTION	INDUCTION	INDUCTION
		INDEX OF PROTECTION (IP)			IP22			
		INSULATION GRADE			B			
		RATED INPUT POWER		kW	1.7	2.1	2.92	4.20
		RATED RUNNING CURRENT		A	3.7	4.3	5.6	7.9
		MOTOR CAPACITY		kW	2.2	3.7	3.7	5.5
		POLES			4	4	4	4
	COIL	TUBE	MATERIAL		COPPER			
			DIAMETER	mm	9.52			
		FIN	MATERIAL		ALUMINIUM			
			FACE AREA	m^2	0.57	0.65	0.89	1.14
			ROW		3	3	4	4
	AIR QUALITY	FILTER	TYPE		WASHABLE SARANET			
			QUANTITY	pc	2	2	2	2
	CASING			COLOUR	IVORY WHITE			
CONDENSER	SOUND POWER LEVEL			dBA	85	87	87	92
	SOUND PRESSURE LEVEL			dBA	66	68	68	73
	UNIT DIMENSION	HEIGHT X WIDTH X DEPTH		mm	1390 x 1965 x 1630	1390 x 1965 x 1630	1690 x 1965 x 1905	1650 x 2410 x 2030
	PACKING DIMENSION	HEIGHT X WIDTH X DEPTH		mm	1540 x 2150 x 1935	1540 x 2150 x 1935	1865 x 2150 x 2220	1875 x 2590 x 2270
	UNIT WEIGHT			kg	600	650	850	980
	FAN	TYPE			PROPELLER			
		DRIVE			DIRECT DRIVE			
	FAN MOTOR	TYPE			INDUCTION			
		INDEX OF PROTECTION (IP)			IP55			
		INSULATION GRADE			F			
		RATED INPUT POWER		kW	0.52	0.80	0.87	1.5
		RATED RUNNING CURRENT		A	2.3	3.5	3.8	2.7
		MOTOR OUTPUT		kW	0.36	0.58	0.68	1.2
		POLES			6	6	6	6
	COMPRESSOR	TYPE			SCROLL			
		OIL TYPE			MINERAL OIL			
		OIL AMOUNT		cm^3	2514	3253	3253	3253
		RATED INPUT POWER (COOLING)		kW	5.16	6.61	9.17	11.68
		RATED RUNNING CURRENT (COOLING)		A	9.8	12.6	16.1	22.5
		LOCKED ROTOR AMP.		A	100.0	111.0	118.0	174.0
	COIL	TUBE	MATERIAL		COPPER			
			DIAMETER	mm	9.52			
		FIN	MATERIAL		ALUMINIUM			
			FACE AREA	m^2	1.30	1.44	1.64	2.13
			ROW		2	2	3	3
	CASING			COLOUR	IVORY WHITE			

1) GROSS COOLING CAPACITY BASED ON 27°C DB / 19°C WB INDOOR AND 35°C DB OUTDOOR
2) GROSS COOLING CAPACITY BASED ON 29°C DB / 19°C WB INDOOR AND 46°C DB OUTDOOR
3) GROSS CAPACITY DOES NOT INCLUDE THE EFFECT OF EVAPORATOR FAN MOTOR HEAT
4) ALL SPECIFICATIONS ARE SUBJECTED TO CHANGE BY THE MANUFACTURER WITHOUT PRIOR NOTICE

PERFORMANCE DATA

Model: ART150C

AFR (CFM)	EWB	EDB	Outdoor temperature																	
			19°C			25°C			30°C			35°C			40°C			46°C		
			TC	SHC	PI	TC	SHC	PI	TC	SHC	PI	TC	SHC	PI	TC	SHC	PI	TC	SHC	PI
4140	16°C	21°C	41.27	30.27	10.25	39.96	29.60	10.96	38.57	28.90	11.77	37.08	28.15	12.71	34.96	26.54	13.75	32.43	24.61	15.00
		24°C	41.43	36.06	10.26	40.12	35.31	10.97	38.73	34.51	11.79	37.25	33.67	12.72	35.13	31.75	13.76	32.58	29.45	15.02
		27°C	41.58	41.50	10.27	40.31	40.31	10.98	38.96	38.96	11.80	37.58	37.58	12.74	35.43	35.43	13.79	32.86	32.86	15.05
		30°C	43.23	43.23	10.38	42.14	42.14	11.10	40.97	40.97	11.95	39.71	39.71	12.91	37.45	37.45	13.97	34.73	34.73	15.24
	19°C	24°C	45.34	28.60	10.51	43.93	27.98	11.23	42.42	27.32	12.06	40.82	26.62	12.99	38.49	25.10	14.06	35.70	23.28	15.34
		27°C	45.46	33.41	10.52	44.04	32.73	11.24	42.54	32.00	12.06	40.94	31.24	13.01	38.61	29.46	14.07	35.81	27.32	15.35
		30°C	45.63	40.77	10.53	44.19	40.03	11.25	42.67	39.25	12.08	41.07	38.44	13.02	38.72	36.24	14.09	35.91	33.61	15.37
		33°C	45.90	45.90	10.54	44.59	44.59	11.27	43.29	43.29	12.12	41.99	41.99	13.09	39.59	39.59	14.16	36.72	36.72	15.45
	22°C	27°C	49.75	26.87	10.80	48.17	26.28	11.53	46.54	25.66	12.37	44.81	25.02	13.32	42.26	23.60	14.41	39.19	21.88	15.72
		30°C	49.82	33.21	10.80	48.25	32.55	11.53	46.62	31.87	12.37	44.90	31.13	13.32	42.34	29.36	14.42	39.27	27.22	15.73
		33°C	49.95	38.70	10.81	48.39	38.01	11.54	46.76	37.29	12.39	45.04	36.54	13.34	42.47	34.45	14.43	39.39	31.95	15.75
		36°C	50.10	44.07	10.82	48.54	43.37	11.55	46.88	42.64	12.40	45.17	41.88	13.35	42.59	39.49	14.44	39.50	36.63	15.76
4600	16°C	21°C	42.14	31.49	10.31	40.79	30.82	11.01	39.33	30.08	11.83	37.79	29.26	12.76	35.64	27.60	13.81	33.05	25.59	15.07
		24°C	42.36	37.54	10.32	41.00	36.77	11.03	39.56	35.96	11.85	38.03	35.10	12.78	35.86	33.10	13.83	33.25	30.70	15.09
		27°C	42.65	42.65	10.34	41.38	41.38	11.05	40.09	40.09	11.89	38.80	38.80	12.84	36.58	36.58	13.89	33.93	33.93	15.16
		30°C	44.86	44.86	10.48	43.71	43.71	11.21	42.47	42.47	12.06	41.14	41.14	13.02	38.80	38.80	14.09	35.98	35.98	15.37
	19°C	24°C	46.26	29.72	10.57	44.80	29.10	11.29	43.23	28.43	12.12	41.57	27.73	13.05	39.20	26.15	14.13	36.35	24.25	15.41
		27°C	46.44	34.79	10.58	44.97	34.09	11.30	43.41	33.35	12.13	41.76	32.57	13.07	39.38	31.21	14.14	36.52	29.58	15.43
		30°C	46.65	42.68	10.60	45.16	41.92	11.32	43.58	41.13	12.15	41.94	40.31	13.09	39.55	38.01	14.16	36.68	35.25	15.45
		33°C	47.38	47.38	10.64	46.17	46.17	11.38	44.89	44.89	12.24	43.53	43.53	13.21	41.05	41.05	14.30	38.07	38.07	15.60
	22°C	27°C	50.70	27.91	10.86	49.08	27.31	11.59	47.39	26.70	12.43	45.60	26.05	13.38	43.00	24.57	14.48	39.87	22.79	15.80
		30°C	50.83	34.66	10.87	49.21	33.97	11.60	47.52	33.25	12.44	45.73	32.49	13.39	43.13	30.64	14.49	40.00	28.42	15.81
		33°C	51.02	40.53	10.88	49.41	39.83	11.62	47.70	39.09	12.46	45.91	38.32	13.41	43.29	36.13	14.51	40.15	33.51	15.83
		36°C	51.20	46.34	10.89	49.57	45.62	11.63	47.90	44.81	12.48	46.24	43.86	13.44	43.61	41.36	14.54	40.44	38.36	15.86
5060	16°C	21°C	42.88	32.35	10.35	41.48	31.60	11.06	39.99	30.80	11.88	38.43	29.95	12.81	36.24	28.25	13.86	33.61	26.20	15.12
		24°C	43.16	38.55	10.37	41.75	37.77	11.08	40.27	36.95	11.90	38.69	36.09	12.83	36.48	34.03	13.88	33.83	31.56	15.15
		27°C	43.76	43.76	10.41	42.54	42.54	11.13	41.29	41.29	11.97	39.95	39.95	12.93	37.67	37.67	13.99	34.94	34.94	15.26
		30°C	46.30	46.30	10.57	45.08	45.08	11.31	43.78	43.78	12.16	42.40	42.40	13.12	39.98	39.98	14.20	37.08	37.08	15.49
	19°C	24°C	47.04	31.11	10.62	45.52	30.47	11.34	43.90	29.79	12.17	42.20	29.07	13.11	39.79	27.41	14.18	36.90	25.42	15.47
		27°C	47.27	36.41	10.64	45.76	35.69	11.36	44.14	34.93	12.19	42.44	34.13	13.13	40.02	32.18	14.20	37.12	29.84	15.50
		30°C	47.52	44.87	10.65	45.97	44.09	11.37	44.39	43.26	12.21	42.73	42.33	13.15	40.30	39.91	14.23	37.37	37.02	15.52
		33°C	48.92	48.92	10.74	47.65	47.65	11.49	46.32	46.32	12.35	44.89	44.89	13.33	42.33	42.33	14.42	39.26	39.26	15.73
	22°C	27°C	51.51	29.19	10.91	49.84	28.59	11.65	48.09	27.97	12.49	46.26	27.33	13.44	43.62	25.77	14.54	40.46	23.90	15.86
		30°C	51.68	36.30	10.93	50.02	35.59	11.66	48.29	34.85	12.50	46.46	34.07	13.45	43.81	32.12	14.56	40.63	29.79	15.88
		33°C	51.93	42.64	10.94	50.25	41.91	11.68	48.50	41.15	12.52	46.66	40.36	13.47	44.00	38.06	14.58	40.81	35.30	15.91
		36°C	52.19	48.83	10.96	50.62	47.92	11.70	49.03	46.87	12.56	47.44	45.65	13.54	44.74	43.04	14.65	41.49	39.92	15.98

Remark:
AFR: Air flow rate (CFM)
EWB: Entering Wet Bulb Temp. (°C)
EDB: Entering Dry Bulb Temp. (°C)
TC: Total Cooling Capacity (kW)
SC: Sensible Cooling Capacity (kW)
PI: Power Input

Notes:
1. Ratings shown are gross capacities which do not include a deduction for indoor fan motor heat.
2. shows nominal capacities.
3. Direct interpolation is permissible. Do not extrapolate.
4. Unit is able to operate at ambient from 19°C to 54°C without pressure trip.

Model: ART180C

AFR (CFM)	EWB	EDB	Outdoor temperature																	
			19.0°C			25.0°C			30.0°C			35.0°C			40.0°C			46.0°C		
			TC	SC	PI	TC	SC	PI	TC	SC	PI	TC	SC	PI	TC	SC	PI	TC	SC	PI
5850	16°C	21°C	53.14	38.99	13.27	51.46	38.13	14.18	49.67	37.22	15.24	47.75	36.25	16.45	45.58	34.60	18.12	42.97	32.61	20.12
		24°C	53.35	46.44	13.29	51.67	45.47	14.20	49.88	44.45	15.26	47.98	43.37	16.47	45.79	41.39	18.14	43.17	39.02	20.15
		27°C	53.55	53.45	13.30	51.91	51.91	14.22	50.17	50.17	15.28	48.39	48.39	16.50	46.19	46.19	18.17	43.54	43.54	20.19
		30°C	55.67	55.67	13.43	54.27	54.27	14.38	52.76	52.76	15.47	51.14	51.14	16.71	48.81	48.81	18.41	46.02	46.02	20.45
	19°C	24°C	58.39	36.83	13.61	56.58	36.03	14.53	54.63	35.18	15.61	52.57	34.28	16.82	50.17	32.72	18.53	47.30	30.85	20.58
		27°C	58.54	43.02	13.62	56.72	42.14	14.54	54.78	41.21	15.62	52.73	40.23	16.84	50.33	38.40	18.55	47.45	36.20	20.60
		30°C	58.77	52.50	13.63	56.91	51.55	14.56	54.96	50.55	15.64	52.89	49.50	16.86	50.48	47.25	18.57	47.59	44.54	20.62
		33°C	59.11	59.11	13.65	57.42	57.42	14.59	55.75	55.75	15.69	54.07	54.07	16.95	51.61	51.61	18.67	48.65	48.65	20.73
	22°C	27°C	64.07	34.60	13.98	62.04	33.84	14.92	59.93	33.05	16.01	57.71	32.23	17.24	55.08	30.76	18.99	51.93	29.00	21.09
		30°C	64.15	42.77	13.98	62.14	41.92	14.93	60.04	41.04	16.02	57.82	40.09	17.25	55.19	38.26	19.00	52.03	36.07	21.10
		33°C	64.33	49.84	14.00	62.32	48.95	14.94	60.22	48.02	16.03	58.00	47.05	17.27	55.36	44.91	19.02	52.19	42.34	21.12
		36°C	64.52	56.75	14.01	62.51	55.86	14.96	60.38	54.91	16.05	58.17	53.94	17.28	55.52	51.48	19.04	52.34	48.53	21.14
6500	16°C	21°C	54.26	40.55	13.34	52.53	39.69	14.26	50.65	38.74	15.32	48.67	37.69	16.52	46.46	35.97	18.20	43.80	33.91	20.21
		24°C	54.55	48.34	13.36	52.81	47.36	14.28	50.95	46.32	15.34	48.97	45.21	16.54	46.74	43.15	18.22	44.06	40.68	20.24
		27°C	54.92	54.92	13.38	53.30	53.30	14.31	51.63	51.63	15.39	49.96	49.96	16.62	47.69	47.69	18.31	44.96	44.96	20.33
		30°C	57.77	57.77	13.57	56.29	56.29	14.51	54.69	54.69	15.61	52.99	52.99	16.86	50.57	50.57	18.57	47.68	47.68	20.63
	19°C	24°C	59.58	38.28	13.68	57.70	37.48	14.61	55.67	36.61	15.69	53.53	35.71	16.90	51.09	34.09	18.62	48.17	32.13	20.68
		27°C	59.81	44.81	13.70	57.92	43.91	14.63	55.90	42.95	15.70	53.78	41.95	16.92	51.33	42.85	18.64	48.39	43.94	20.70
		30°C	60.08	54.96	13.72	58.16	53.99	14.65	56.13	52.97	15.72	54.02	51.91	16.94	51.56	49.55	18.66	48.60	46.71	20.73
		33°C	61.02	61.02	13.77	59.46	59.46	14.74	57.81	57.81	15.85	56.06	56.06	17.11	53.51	53.51	18.84	50.44	50.44	20.93
	22°C	27°C	65.30	35.94	14.06	63.21	35.17	15.01	61.03	34.38	16.10	58.72	33.55	17.32	56.04	32.03	19.08	52.83	30.19	21.20
		30°C	65.46	44.63	14.07	63.37	43.74	15.02	61.20	42.82	16.11	58.90	41.85	17.34	56.22	39.94	19.10	53.00	37.65	21.21
		33°C	65.71	52.20	14.09	63.63	51.29	15.04	61.43	50.34	16.13	59.13	49.35	17.36	56.43	47.10	19.12	53.20	44.40	21.24
		36°C	65.94	59.68	14.10	63.84	58.76	15.06	61.69	57.71	16.15	59.55	56.49	17.39	56.84	53.91	19.16	53.58	50.82	21.28
7150	16°C	21°C	55.22	41.66	13.40	53.42	40.69	14.32	51.50	39.67	15.38	49.49	38.58	16.58	47.23	36.82	18.27	44.53	34.71	20.29
		24°C	55.58	49.64	13.43	53.77	48.64	14.34	51.86	47.59	15.40	49.82	46.47	16.61	47.55	44.36	18.30	44.83	41.82	20.32
		27°C	56.36	56.36	13.47	54.79	54.79	14.41	53.18	53.18	15.50	51.45	51.45	16.74	49.11	49.11	18.44	46.29	46.29	20.48
		30°C	59.63	59.63	13.69	58.05	58.05	14.64	56.38	56.38	15.74	54.60	54.60	16.99	52.12	52.12	18.71	49.13	49.13	20.78
	19°C	24°C	60.57	40.06	13.75	58.62	39.24	14.68	56.54	38.37	15.75	54.34	37.43	16.97	51.87	35.73	18.69	48.90	33.68	20.76
		27°C	60.88	46.89	13.77	58.93	45.97	14.70	56.84	44.98	15.78	54.66	43.95	16.99	52.17	41.95	18.72	49.18	39.54	20.79
		30°C	61.20	57.79	13.79	59.20	56.78	14.72	57.17	55.71	15.80	55.03	54.51	17.02	52.53	52.03	18.75	49.52	49.05	20.83
		33°C	63.00	63.00	13.91	61.36	61.36	14.87	59.65	59.65	15.99	57.82	57.82	17.25	55.18	55.18	19.00	52.02	52.02	21.10
	22°C	27°C	66.34	37.59	14.13	64.19	36.82	15.08	61.93	36.02	16.17	59.58	35.20	17.39	56.86	33.60	19.16	53.61	31.67	21.28
		30°C	66.56	46.75	14.14	64.42	45.83	15.10	62.19	44.88	16.19	59.83	43.87	17.42	57.11	41.87	19.18	53.84	39.48	21.31
		33°C	66.88	54.91	14.17	64.72	53.97	15.12	62.46	53.00	16.21	60.10	51.98	17.44	57.36	49.61	19.21	54.07	46.77	21.34
		36°C	67.21	62.88	14.19	65.19	61.72	15.15	63.14	60.36	16.26	61.10	58.79	17.53	58.32	56.11	19.31	54.98	52.90	21.44

Remark:
AFR: Air flow rate (CFM)
EWB: Entering Wet Bulb Temp. (°C)
EDB: Entering Dry Bulb Temp. (°C)
TC: Total Cooling Capacity (kW)
SC: Sensible Cooling Capacity (kW)
PI: Power Input

Notes:
1. Ratings shown are gross capacities which do not include a deduction for indoor fan motor heat.
2. shows nominal capacities.
3. Direct interpolation is permissible. Do not extrapolate.
4. Unit is able to operate at ambient from 19°C to 54°C without pressure trip.

Model: ART240C

AFR (CFM)	EWB	EDB	Outdoor temperature																	
			19.0°C			25.0°C			30.0°C			35.0°C			40.0°C			46.0°C		
			TC	SC	PI	TC	SC	PI	TC	SC	PI	TC	SC	PI	TC	SC	PI	TC	SC	PI
7110	16°C	21°C	70.66	51.17	18.04	68.43	50.04	19.28	66.05	48.85	20.72	63.49	47.58	22.36	60.18	45.10	24.30	56.21	42.12	26.64
		24°C	70.94	60.95	18.06	68.70	59.69	19.30	66.33	58.35	20.74	63.79	56.92	22.38	60.47	53.96	24.33	56.48	50.40	26.67
		27°C	71.20	70.16	18.08	69.03	68.85	19.33	66.71	66.71	20.77	64.34	64.34	22.43	60.99	60.99	24.38	56.97	56.97	26.72
		30°C	74.03	74.03	18.26	72.16	72.16	19.54	70.15	70.15	21.03	68.00	68.00	22.72	64.46	64.46	24.69	60.21	60.21	27.07
	19°C	24°C	77.64	48.34	18.50	75.23	47.29	19.76	72.64	46.18	21.21	69.90	45.00	22.87	66.26	42.65	24.86	61.88	39.84	27.24
		27°C	77.84	56.47	18.51	75.41	55.32	19.77	72.84	54.10	21.23	70.11	52.81	22.89	66.46	50.05	24.88	62.07	46.75	27.26
		30°C	78.14	68.92	18.53	75.68	67.67	19.79	73.08	66.36	21.26	70.32	64.98	22.91	66.66	61.59	24.90	62.26	57.52	27.30
		33°C	78.59	78.59	18.56	76.35	76.35	19.84	74.12	74.12	21.33	71.90	71.90	23.04	68.15	68.15	25.04	63.65	63.65	27.44
	22°C	27°C	85.19	45.42	19.00	82.49	44.42	20.29	79.69	43.38	21.77	76.74	42.30	23.44	72.74	40.10	25.47	67.94	37.45	27.92
		30°C	85.30	56.14	19.01	82.62	55.03	20.30	79.84	53.87	21.78	76.89	52.62	23.45	72.88	49.88	25.49	68.07	46.59	27.93
		33°C	85.54	65.42	19.02	82.87	64.25	20.31	80.07	63.04	21.80	77.12	61.76	23.47	73.10	58.54	25.51	68.28	54.68	27.96
		36°C	85.79	74.50	19.04	83.11	73.32	20.33	80.28	72.08	21.82	77.35	70.80	23.49	73.32	67.11	25.53	68.48	62.68	27.99
7900	16°C	21°C	72.15	53.23	18.14	69.84	52.10	19.38	67.35	50.85	20.82	64.72	49.47	22.46	61.35	46.89	24.41	57.30	43.80	26.76
		24°C	72.53	63.46	18.16	70.22	62.17	19.41	67.75	60.80	20.85	65.12	59.34	22.49	61.72	56.25	24.44	57.65	52.54	26.79
		27°C	73.03	73.03	18.19	70.87	70.87	19.45	68.65	68.65	20.92	66.43	66.43	22.59	62.97	62.97	24.56	58.82	58.82	26.92
		30°C	76.82	76.82	18.44	74.84	74.84	19.73	72.72	72.72	21.22	70.45	70.45	22.92	66.78	66.78	24.91	62.38	62.38	27.30
	19°C	24°C	79.22	50.25	18.60	76.72	49.19	19.86	74.02	48.06	21.32	71.18	46.88	22.97	67.47	44.43	24.97	63.02	41.50	27.37
		27°C	79.52	58.82	18.62	77.01	57.63	19.88	74.34	56.38	21.35	71.51	55.06	23.00	67.78	57.66	25.00	63.31	60.77	27.40
		30°C	79.88	72.14	18.65	77.33	70.87	19.91	74.63	69.53	21.37	71.82	68.14	23.03	68.08	64.59	25.03	63.59	60.33	27.44
		33°C	81.13	81.13	18.72	79.06	79.06	20.03	76.87	76.87	21.54	74.55	74.55	23.25	70.66	70.66	25.28	66.00	66.00	27.70
	22°C	27°C	86.83	47.17	19.11	84.05	46.17	20.40	81.15	45.13	21.88	78.08	44.04	23.55	74.01	41.75	25.60	69.13	38.99	28.06
		30°C	87.03	58.59	19.13	84.26	57.42	20.42	81.37	56.20	21.90	78.32	54.93	23.57	74.23	52.07	25.62	69.34	48.63	28.08
		33°C	87.37	68.52	19.15	84.60	67.32	20.44	81.69	66.08	21.92	78.62	64.77	23.60	74.52	61.40	25.65	69.60	57.35	28.11
		36°C	87.67	78.33	19.17	84.89	77.13	20.47	82.03	75.75	21.95	79.19	74.14	23.65	75.06	70.28	25.70	70.11	65.64	28.17
8690	16°C	21°C	73.43	54.68	18.22	71.03	53.42	19.46	68.48	52.07	20.91	65.80	50.64	22.54	62.37	48.00	24.50	58.26	44.83	26.86
		24°C	73.91	65.17	18.25	71.50	63.85	19.50	68.96	62.47	20.94	66.25	61.00	22.58	62.80	57.82	24.54	58.65	54.01	26.90
		27°C	74.94	74.94	18.32	72.85	72.85	19.59	70.71	70.71	21.07	68.41	68.41	22.75	64.84	64.84	24.73	60.57	60.57	27.10
		30°C	79.29	79.29	18.60	77.19	77.19	19.90	74.97	74.97	21.40	72.61	72.61	23.09	68.82	68.82	25.10	64.28	64.28	27.51
	19°C	24°C	80.54	52.59	18.69	77.95	51.51	19.95	75.18	50.36	21.41	72.26	49.14	23.06	68.49	46.58	25.07	63.97	43.50	27.48
		27°C	80.95	61.55	18.72	78.36	60.34	19.98	75.58	59.04	21.44	72.68	57.69	23.10	68.89	54.68	25.11	64.34	51.07	27.52
		30°C	81.38	75.85	18.75	78.72	74.53	20.01	76.01	73.13	21.48	73.18	71.55	23.14	69.36	67.82	25.15	64.78	63.35	27.57
		33°C	83.76	83.76	18.90	81.59	81.59	20.22	79.31	79.31	21.74	76.88	76.88	23.45	72.87	72.87	25.49	68.06	68.06	27.94
	22°C	27°C	88.21	49.34	19.21	85.35	48.34	20.50	82.35	47.28	21.97	79.22	46.21	23.64	75.09	43.80	25.70	70.14	40.91	28.17
		30°C	88.50	61.37	19.23	85.66	60.16	20.52	82.69	58.91	22.00	79.56	57.59	23.67	75.41	54.59	25.73	70.44	50.99	28.20
		33°C	88.92	72.07	19.26	86.05	70.84	20.55	83.06	69.56	22.03	79.91	68.23	23.71	75.74	64.67	25.77	70.74	60.41	28.25
		36°C	89.37	82.54	19.29	86.69	81.01	20.60	83.96	79.23	22.11	81.24	77.17	23.82	77.01	73.14	25.90	71.93	68.32	28.38

Remark:
AFR: Air flow rate (CFM)
EWB: Entering Wet Bulb Temp. (°C)
EDB: Entering Dry Bulb Temp. (°C)
TC: Total Cooling Capacity (kW)
SC: Sensible Cooling Capacity (kW)
PI: Power Input

Notes:
1. Ratings shown are gross capacities which do not include a deduction for indoor fan motor heat.
2. shows nominal capacities.
3. Direct interpolation is permissible. Do not extrapolate.
4. Unit is able to operate at ambient from 19°C to 54°C without pressure trip.

Model: ART300C

AFR (CFM)	EWB	EDB	Outdoor temperature																	
			19.0°C			25.0°C			30.0°C			35.0°C			40.0°C			46.0°C		
			TC	SC	PI	TC	SC	PI	TC	SC	PI	TC	SC	PI	TC	SC	PI	TC	SC	PI
7830	16°C	21°C	85.44	61.87	22.25	82.73	60.51	23.78	79.86	59.06	25.55	76.77	57.53	27.57	72.71	54.49	29.84	67.84	50.84	32.57
		24°C	85.77	73.70	22.27	83.07	72.16	23.80	80.19	70.54	25.58	77.13	68.83	27.60	73.05	65.19	29.87	68.16	60.83	32.60
		27°C	86.09	84.83	22.30	83.46	83.25	23.83	80.66	80.66	25.61	77.80	77.80	27.65	73.69	73.69	29.93	68.75	68.75	32.67
		30°C	89.50	89.50	22.51	87.25	87.25	24.10	84.82	84.82	25.93	82.22	82.22	28.01	77.88	77.88	30.32	72.66	72.66	33.09
	19°C	24°C	93.87	58.45	22.81	90.95	57.18	24.36	87.83	55.83	26.16	84.51	54.41	28.20	80.05	51.53	30.52	74.69	48.08	33.31
		27°C	94.11	68.28	22.82	91.18	66.89	24.38	88.07	65.41	26.18	84.77	63.85	28.22	80.29	60.47	30.54	74.92	56.42	33.33
		30°C	94.47	83.33	22.85	91.50	81.82	24.41	88.35	80.23	26.21	85.02	78.56	28.25	80.53	74.41	30.58	75.14	69.43	33.37
		33°C	95.02	95.02	22.88	92.31	92.31	24.46	89.62	89.62	26.30	86.93	86.93	28.40	82.34	82.34	30.74	76.83	76.83	33.55
	22°C	27°C	103.00	54.91	23.43	99.74	53.70	25.01	96.35	52.45	26.84	92.78	51.15	28.90	87.88	48.44	31.28	82.00	45.20	34.13
		30°C	103.14	67.88	23.44	99.89	66.54	25.02	96.53	65.13	26.85	92.96	63.63	28.91	88.05	60.27	31.29	82.16	56.23	34.15
		33°C	103.43	79.10	23.46	100.20	77.69	25.05	96.81	76.22	26.88	93.24	74.68	28.94	88.32	70.73	31.32	82.41	66.00	34.19
		36°C	103.72	90.07	23.48	100.49	88.65	25.07	97.06	87.15	26.90	93.52	85.60	28.97	88.58	81.08	31.35	82.65	75.65	34.22
8700	16°C	21°C	87.24	64.36	22.37	84.44	62.99	23.90	81.43	61.48	25.67	78.25	59.81	27.69	74.12	56.65	29.97	69.15	52.86	32.71
		24°C	87.69	76.72	22.40	84.90	75.16	23.93	81.91	73.51	25.71	78.73	71.75	27.73	74.57	67.95	30.01	69.58	63.41	32.76
		27°C	88.30	88.30	22.43	85.68	85.68	23.98	83.00	83.00	25.79	80.32	80.32	27.86	76.08	76.08	30.15	70.99	70.99	32.91
		30°C	92.88	92.88	22.74	90.49	90.49	24.33	87.92	87.92	26.17	85.18	85.18	28.26	80.68	80.68	30.59	75.28	75.28	33.38
	19°C	24°C	95.78	60.75	22.93	92.75	59.47	24.49	89.50	58.11	26.29	86.06	56.68	28.33	81.51	53.68	30.66	76.05	50.09	33.46
		27°C	96.15	71.11	22.96	93.11	69.68	24.52	89.88	68.17	26.32	86.46	66.57	28.36	81.89	67.22	30.70	76.41	68.00	33.50
		30°C	96.58	87.23	22.99	93.50	85.69	24.55	90.23	84.06	26.36	86.84	82.39	28.40	82.25	78.03	30.74	76.75	72.81	33.54
		33°C	98.10	98.10	23.09	95.59	95.59	24.70	92.94	92.94	26.56	90.13	90.13	28.67	85.37	85.37	31.03	79.65	79.65	33.87
	22°C	27°C	104.98	57.04	23.56	101.62	55.82	25.15	98.11	54.57	26.98	94.40	53.25	29.04	89.41	50.44	31.43	83.43	47.06	34.30
		30°C	105.23	70.84	23.58	101.88	69.42	25.17	98.38	67.96	27.00	94.69	66.41	29.06	89.69	62.91	31.46	83.68	58.69	34.33
		33°C	105.63	82.84	23.61	102.29	81.40	25.21	98.76	79.89	27.03	95.06	78.32	29.10	90.03	74.18	31.50	84.01	69.21	34.37
		36°C	106.00	94.71	23.64	102.64	93.25	25.24	99.17	91.59	27.07	95.74	89.65	29.16	90.68	84.91	31.56	84.61	79.23	34.44
9570	16°C	21°C	88.78	66.11	22.47	85.88	64.58	24.00	82.80	62.95	25.78	79.56	61.22	27.80	75.36	57.99	30.09	70.31	54.11	32.83
		24°C	89.36	78.79	22.51	86.45	77.20	24.04	83.37	75.53	25.82	80.10	73.76	27.84	75.87	69.86	30.14	70.79	65.18	32.89
		27°C	90.61	90.61	22.58	88.08	88.08	24.16	85.49	85.49	25.98	82.71	82.71	28.05	78.34	78.34	30.36	73.10	73.10	33.14
		30°C	95.86	95.86	22.94	93.33	93.33	24.54	90.65	90.65	26.38	87.78	87.78	28.47	83.15	83.15	30.82	77.58	77.58	33.63
	19°C	24°C	97.38	63.58	23.04	94.24	62.28	24.60	90.90	60.89	26.40	87.37	59.41	28.44	82.75	56.27	30.78	77.21	52.50	33.59
		27°C	97.88	74.42	23.08	94.74	72.95	24.64	91.39	71.38	26.44	87.87	69.75	28.48	83.23	66.06	30.83	77.66	61.64	33.64
		30°C	98.39	91.71	23.11	95.18	90.11	24.68	91.91	88.42	26.48	88.47	86.51	28.53	83.80	81.94	30.88	78.19	76.46	33.70
		33°C	101.28	101.28	23.31	98.65	98.65	24.93	95.89	95.89	26.80	92.95	92.95	28.91	88.04	88.04	31.30	82.14	82.14	34.15
	22°C	27°C	106.65	59.66	23.68	103.20	58.44	25.27	99.57	57.16	27.10	95.78	55.87	29.16	90.72	52.91	31.56	84.65	49.37	34.44
		30°C	107.00	74.20	23.71	103.56	72.74	25.30	99.97	71.22	27.13	96.19	69.63	29.19	91.11	65.95	31.60	85.01	61.54	34.48
		33°C	107.51	87.14	23.74	104.04	85.65	25.34	100.42	84.11	27.17	96.61	82.49	29.24	91.51	78.13	31.64	85.38	72.90	34.53
		36°C	108.05	99.80	23.78	104.81	97.95	25.39	101.51	95.79	27.26	98.23	93.30	29.38	93.04	88.37	31.80	86.81	82.45	34.70

Remark:
AFR: Air flow rate (CFM)
EWB: Entering Wet Bulb Temp. (°C)
EDB: Entering Dry Bulb Temp. (°C)
TC: Total Cooling Capacity (kW)
SC: Sensible Cooling Capacity (kW)
PI: Power Input

Notes:
1. Ratings shown are gross capacities which do not include a deduction for indoor fan motor heat.
2. shows nominal capacities.
3. Direct interpolation is permissible. Do not extrapolate.
4. Unit is able to operate at ambient from 19°C to 54°C without pressure trip.

OUTLINES & DIMENSIONS

Model: ART150C

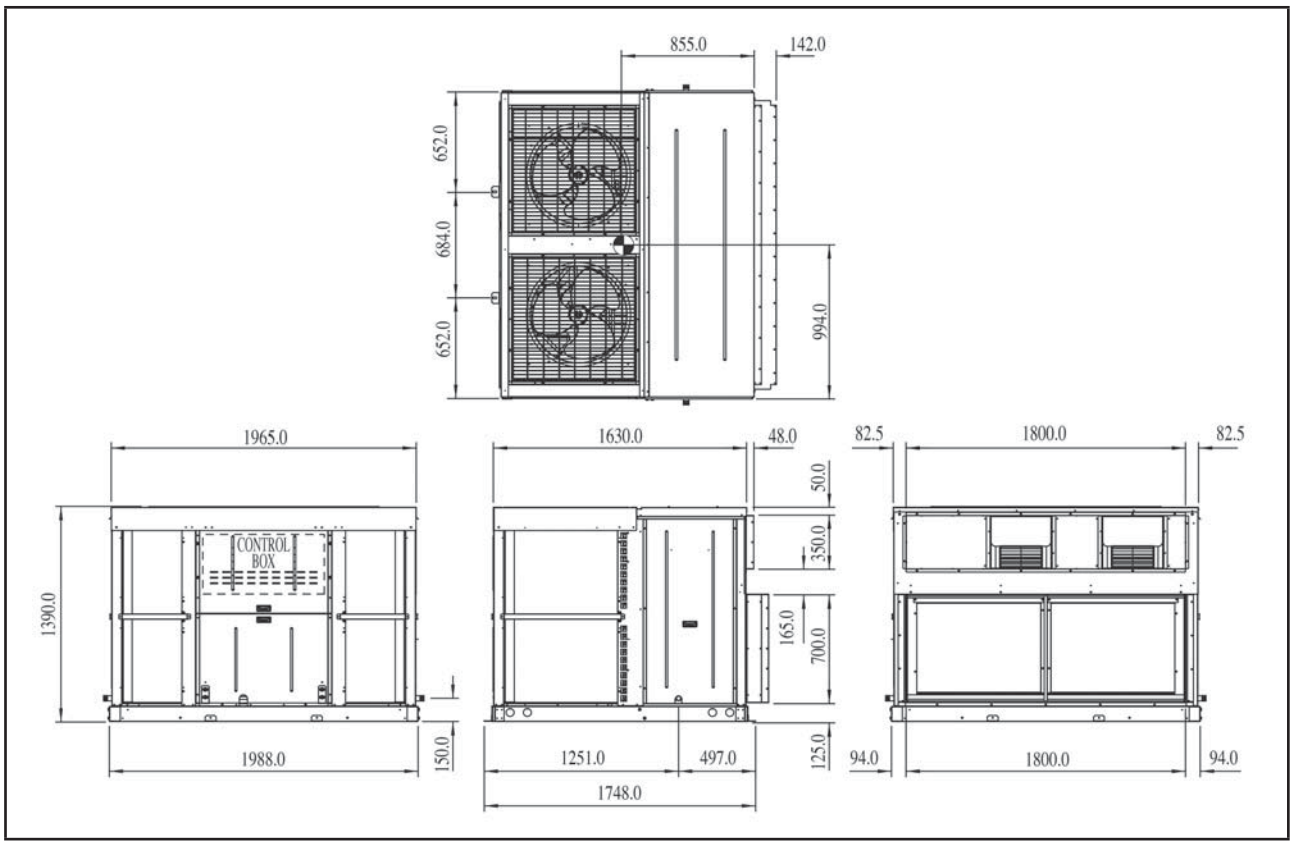

Model: ART180C

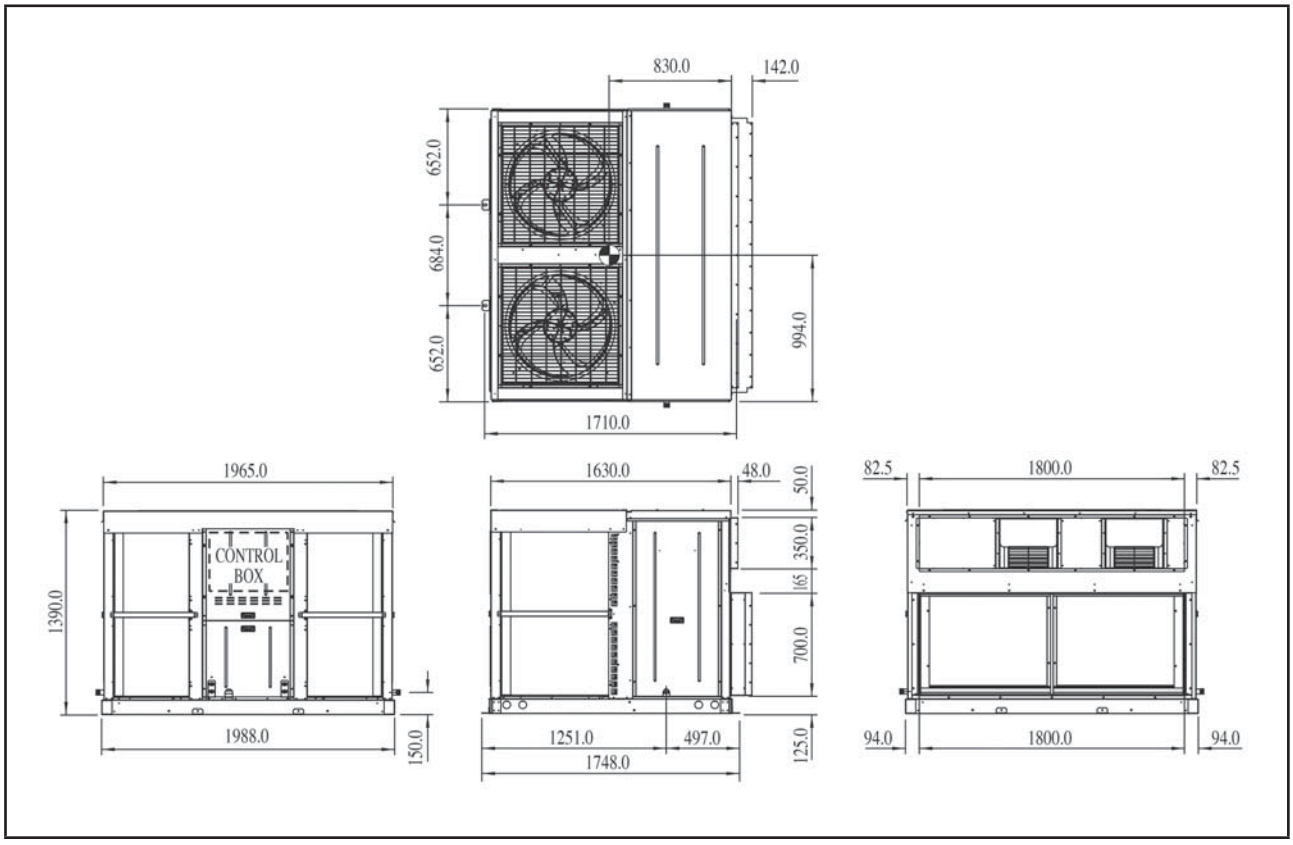

Model: ART240C

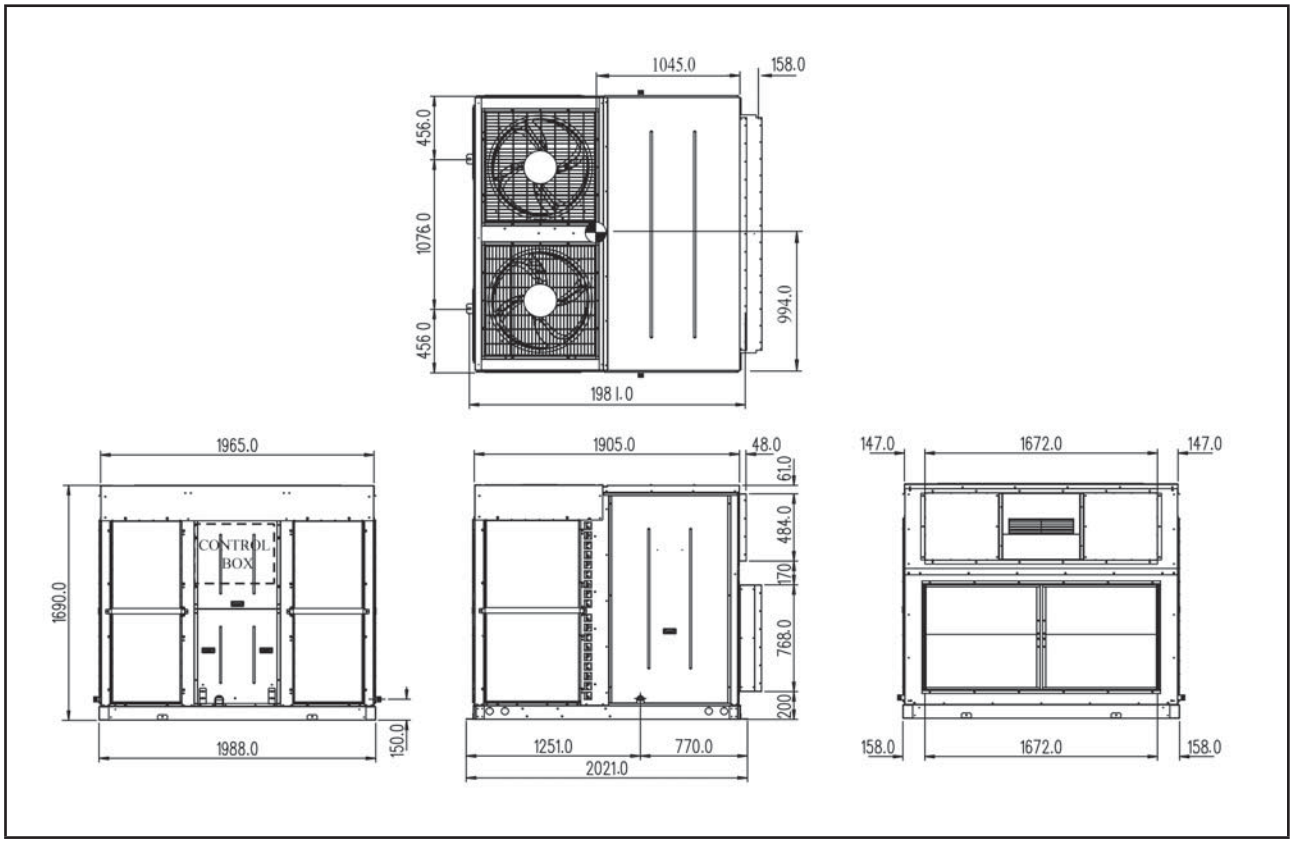

Model: ART300C

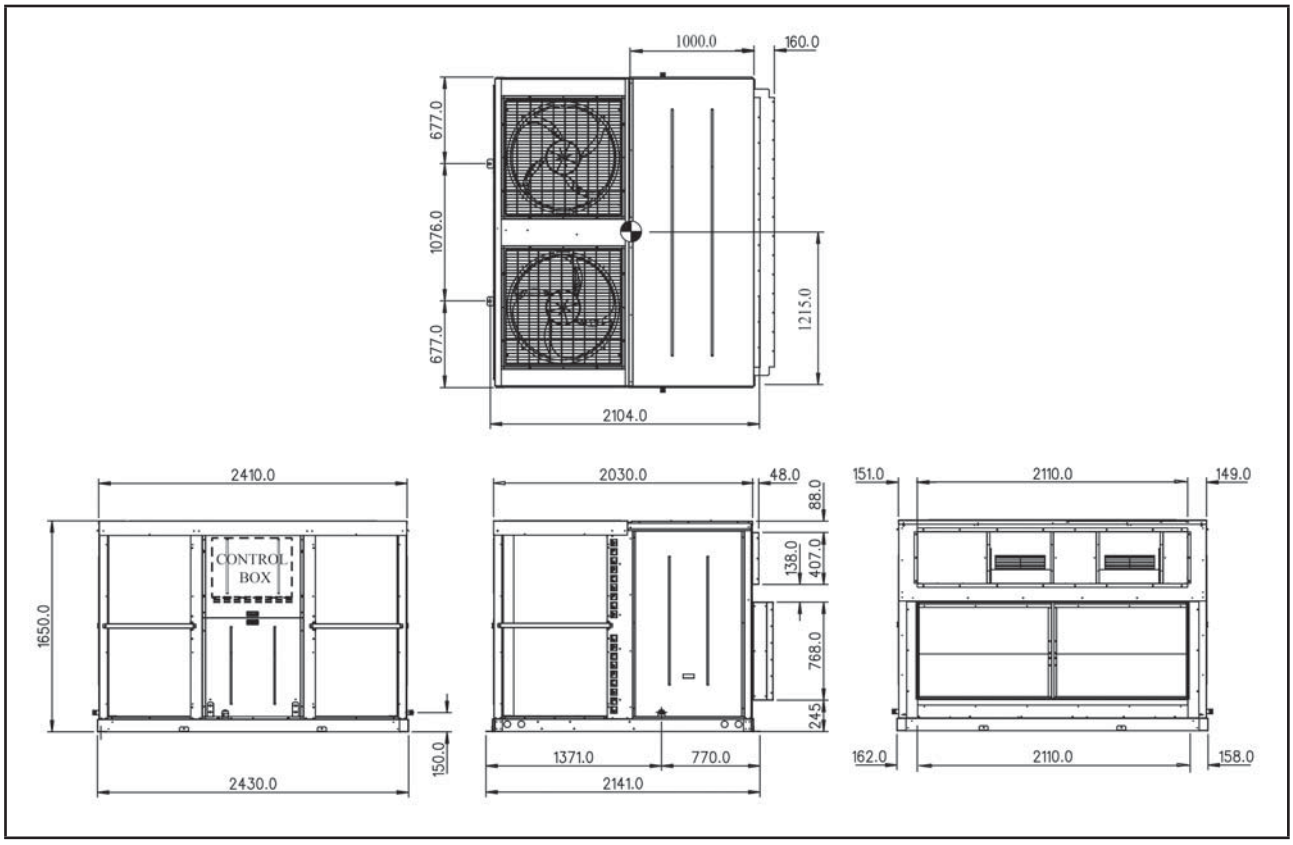

WIRING DIAGRAMS

Model: ART150C (Wired Control)

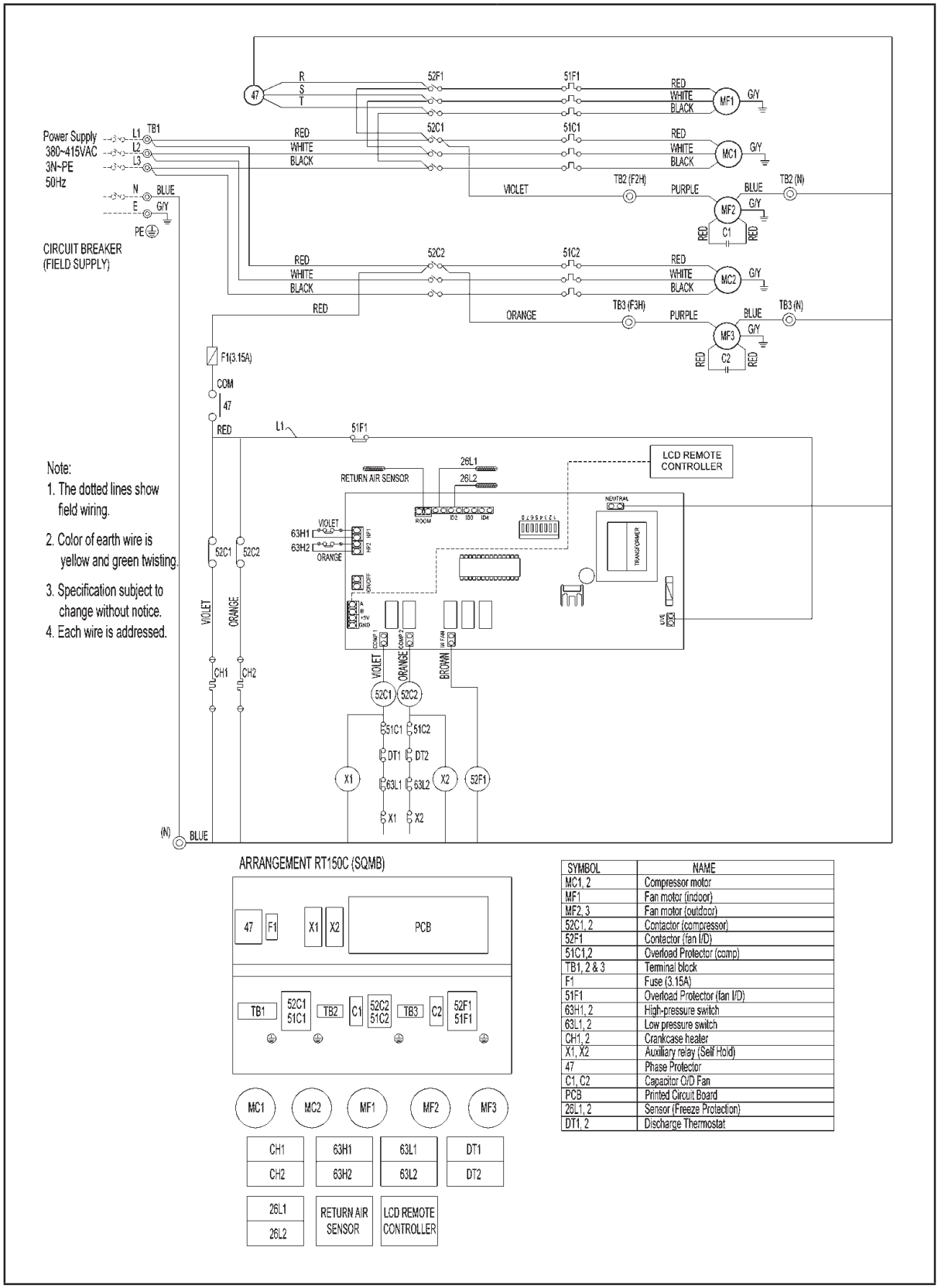

SYMBOL	NAME
MC1, 2	Compressor motor
MF1	Fan motor (indoor)
MF2, 3	Fan motor (outdoor)
52C1, 2	Contactor (compressor)
52F1	Contactor (fan I/D)
51C1,2	Overload Protector (comp)
TB1, 2 & 3	Terminal block
F1	Fuse (3.15A)
51F1	Overload Protector (fan I/D)
63H1, 2	High-pressure switch
63L1, 2	Low pressure switch
CH1, 2	Crankcase heater
X1, X2	Auxiliary relay (Self Hold)
47	Phase Protector
C1, C2	Capacitor O/D Fan
PCB	Printed Circuit Board
26L1, 2	Sensor (Freeze Protection)
DT1, 2	Discharge Thermostat

Model: ART180C (Wired Control)

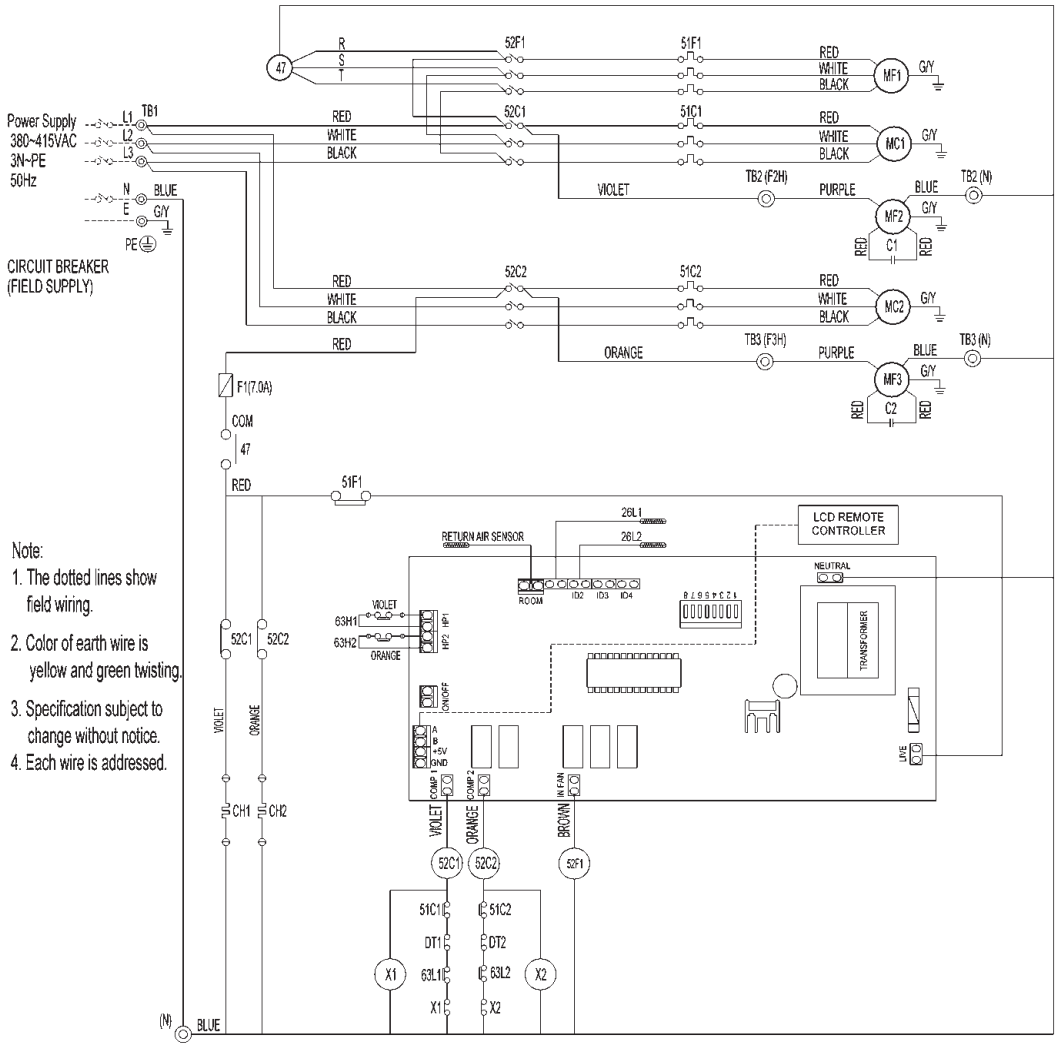

ARRANGEMENT RT180/240C (SQMB)

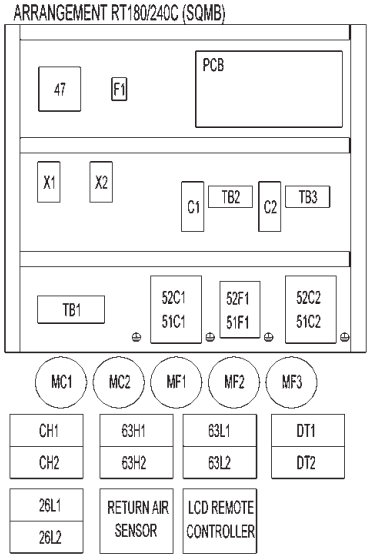

SYMBOL	NAME
MC1, 2	Compressor motor
MF1	Fan motor (indoor)
MF2, 3	Fan motor (outdoor)
52C1, 2	Contactor (compressor)
52F1	Contactor (fan I/D)
51C1,2	Overload Protector (comp)
TB1, 2 & 3	Terminal block
F1	Fuse (3.15A)
51F1	Overload Protector (fan I/D)
63H1, 2	High-pressure switch
63L1, 2	Low pressure switch
CH1, 2	Crankcase heater
X1, X2	Auxiliary relay (self hold)
26L1,2	Sensor (freeze protector)
DT1,2	Discharge thermostat
PCB	Printed circuit board
47	Phase Protector
C1,C2	Capacitor O/D Fan

Model: ART240C (Wired Control)

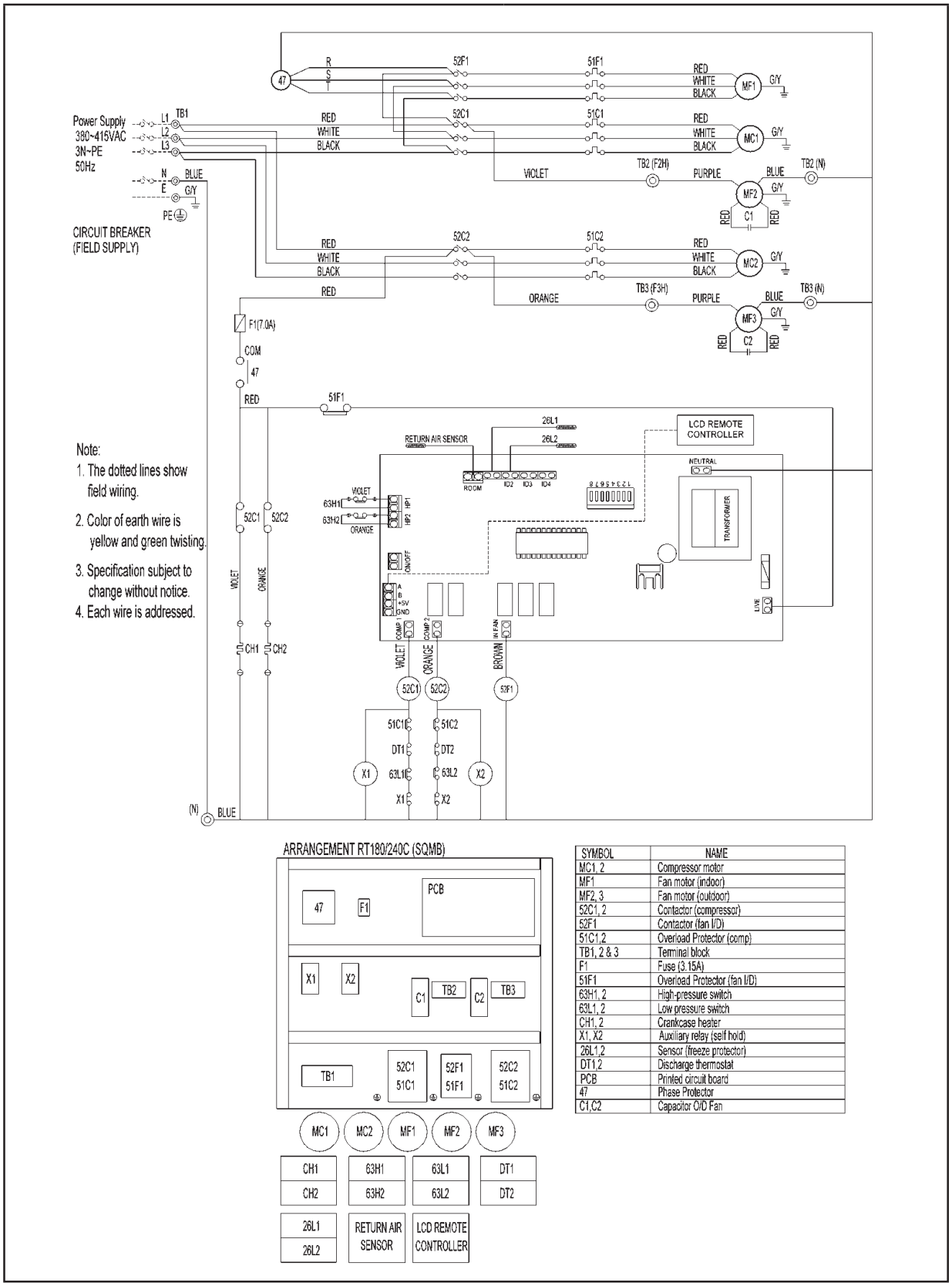

SYMBOL	NAME
MC1, 2	Compressor motor
MF1	Fan motor (indoor)
MF2, 3	Fan motor (outdoor)
52C1, 2	Contactor (compressor)
52F1	Contactor (fan I/D)
51C1,2	Overload Protector (comp)
TB1, 2 & 3	Terminal block
F1	Fuse (3.15A)
51F1	Overload Protector (fan I/D)
63H1, 2	High-pressure switch
63L1, 2	Low pressure switch
CH1, 2	Crankcase heater
X1, X2	Auxiliary relay (self hold)
26L1,2	Sensor (freeze protector)
DT1,2	Discharge thermostat
PCB	Printed circuit board
47	Phase Protector
C1,C2	Capacitor O/D Fan

Model: ART300C (Wired Control)

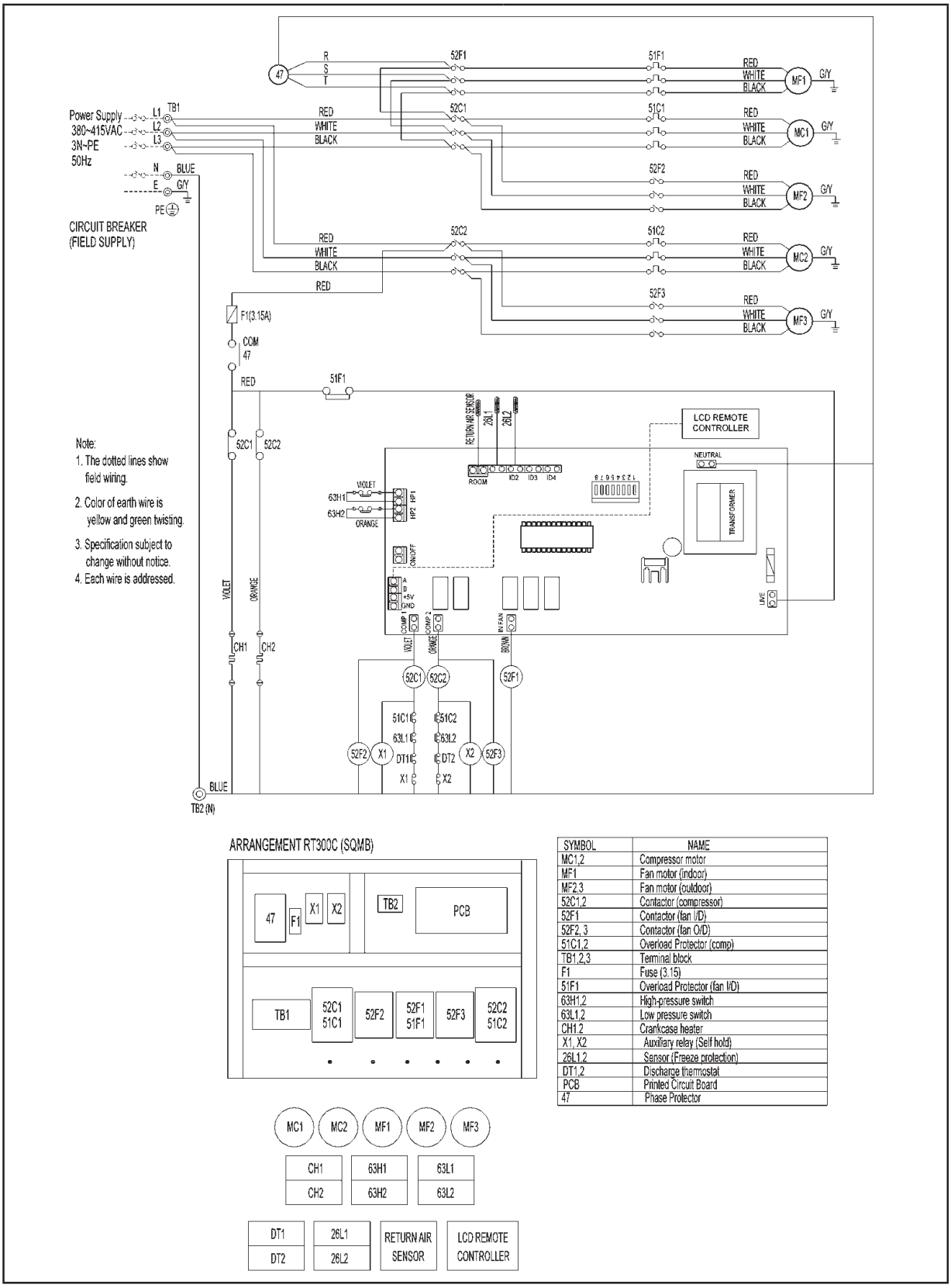

Note:
1. The dotted lines show field wiring.
2. Color of earth wire is yellow and green twisting.
3. Specification subject to change without notice.
4. Each wire is addressed.

ARRANGEMENT RT300C (SQMB)

SYMBOL	NAME
MC1,2	Compressor motor
MF1	Fan motor (indoor)
MF2,3	Fan motor (outdoor)
52C1,2	Contactor (compressor)
52F1	Contactor (fan I/D)
52F2, 3	Contactor (fan O/D)
51C1,2	Overload Protector (comp)
TB1,2,3	Terminal block
F1	Fuse (3.15)
51F1	Overload Protector (fan I/D)
63H1,2	High-pressure switch
63L1,2	Low pressure switch
CH1,2	Crankcase heater
X1, X2	Auxiliary relay (Self hold)
26L1,2	Sensor (Freeze protection)
DT1,2	Discharge thermostat
PCB	Printed Circuit Board
47	Phase Protector

INSTALLATION

Installation Guideline

Safety Precautions

This manual provides the procedures of installation to ensure a safe and good standard of operation for the air conditioner unit.
Special adjustment may be necessary to suit local requirements.
Before using your air conditioner, please read this instruction manual carefully and keep it for future reference.
This appliance is intended to be used by expert or trained users in shops, in light industry and on farms, or for commercial use by lay persons.
This appliance is not intended for use by persons, including children, with reduced physical, sensory or mental capabilities, or lack of experience and knowledge, unless they have been given supervision or instruction concerning use of the appliance by a person responsible for their safety.
Children should be supervised to ensure that they do not play with the appliance.

⚠ WARNING

- Installation and maintenance should be performed by quali ed persons who are familiar with local code and regulation, and experienced with this type of appliance.
- All eld wiring must be installed in accordance with the national wiring regulation.
- Ensure that the rated voltage of the unit corresponds to that of the name plate before commencing wiring work according to the wiring diagram.
- The unit must be GROUNDED to prevent possible hazard due to insulation failure.
- All electrical wiring must not touch the refrigerant piping or any moving parts of the fan motors.
- Con rm that the unit has been switched OFF before installing or servicing the unit.
- Disconnect from the main power supply before servicing the air conditioner unit.
- DO NOT pull out the power cord when the power is ON. This may cause serious electrical shocks which may result in re hazards.
- Keep the indoor and outdoor units, power cable and transmission wiring, at least 1m from TVs and radios, to prevent distorted pictures and static. {Depending on the type and source of the electrical waves, static may be heard even when more than 1m away}.

⚠ CAUTION

Please take note of the following important points when installing.

- **Do not install the unit where leakage of flammable gas may occur.**
  If gas leaks and accumulates around the unit, it may cause re ignition.
- **Ensure that drainage piping is connected properly.**
  If the drainage piping is not connected properly, it may cause water leakage which will dampen the furniture.
- **Do not overcharge the unit.**
  This unit is factory pre-charged.
  Overcharge will cause over-current or damage to the compressor.
- **Ensure that the unit's panel is closed after service or installation.**
  Unsecured panels will cause the unit to operate noisily.
- **Sharp edges and coil surfaces are potential locations which may cause injury hazards. Avoid from being in contact with these places.**
- **Before turning off the power supply, set the remote controller's ON/OFF switch to the "OFF" position to prevent the nuisance tripping of the unit.** If this is not done, the unit's fans will start turning automatically when power resumes, posing a hazard to service personnel or the user.
- **Do not operate any heating apparatus too close to the air conditioner unit.**
- **Don't use joined and twisted wires for incoming power supply.**
- **The equipment is not intended for use in a potentially explosive atmosphere.**

NOTICE

Disposal Requirement
Dismantling of the unit, treatment of the refrigerant, oil and other parts must be done in accordance with the applicable legislation.

Installation Clearances

Refer diagram below for the space required around the unit. Note that:

a) All dimensions shown are in mm.
b) All space values shown are minimum clearance required for the unit.
c) Unit shown in the diagram is ART300C. Other models shall follow the same clearance

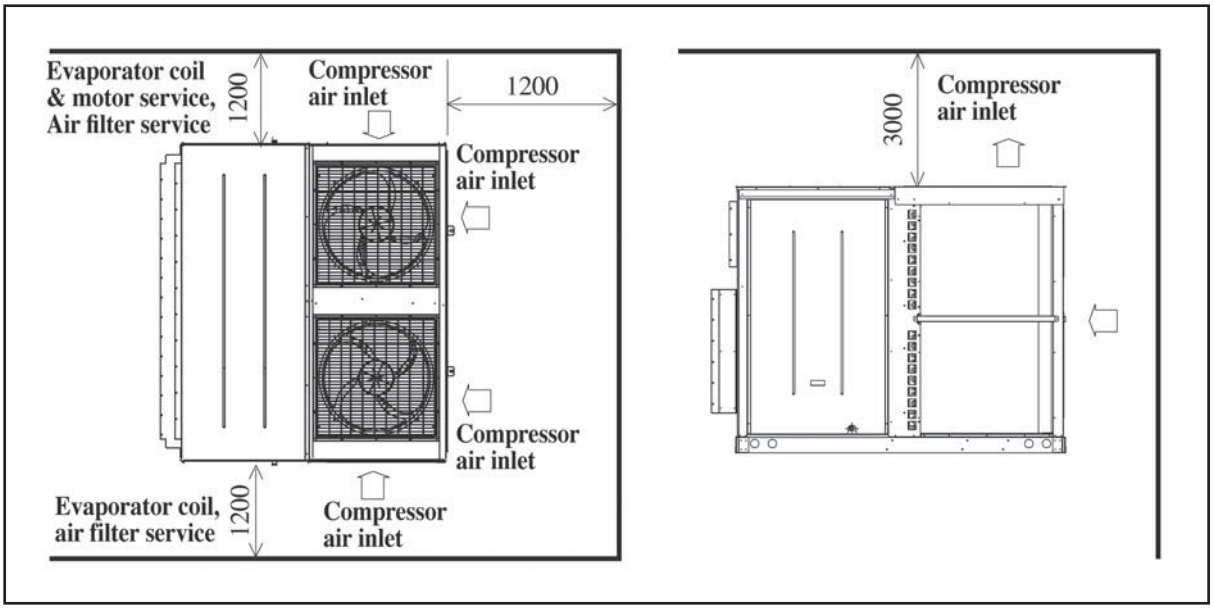

SPECIFICATION GUIDE

General Features

The rooftop unit shall consist of compressors, fan motors, condenser coils, evaporator coil, expansion valves, refrigerant piping and electrical components.

The unit shall be assembled, complete with internal wiring, fully charged with R-22 refrigerant and undergo strict testing & quality check before delivery.

The rooftop unit shall be capable of operating from 19°C to 54°C ambient temperature without failure.

Compressor

Compressor shall be hermetically sealed, high efficiency and low noise scroll type compressor. The compressor shall be equipped with an internal overload protection.

Evaporator Coil and Condenser Coil

Evaporator coil and condenser coil shall be manufactured from seamless inner grooved copper tubes, which are mechanically bonded to aluminium fins.

All coils shall be tested against leakage by Nitrogen holding at 609psig and highly precise Helium leak test at 235psig.

Evaporator Fan & Motor

Condenser coils are manufactured from seamless inner grooved copper tubes mechanically bonded to aluminium fins to ensure optimum heat transfer. All coils are tested against leaks by Nitrogen holding at 609psig and highly precise Helium leak test at 235psig.

Condenser Fan & Motor

Condenser Motor shall be of IP55 insulation class rating and is equipped with dust proof bearing.

Condenser fan shall be direct driven propeller type.

Refrigerant Circuit

The unit shall be able to operate at part loading depending on the requirement of the application.

Each refrigerant circuit shall have an independent Thermal Expansion Valve (TXV), filter drier and High / Low Pressure Switch.

There shall be additional valves provided for site installation of Pressure Gauge and Low Ambient Kit.

Casing / Structure

The casing and structure of the unit shall be made from zinc coated galvanized steel sheets and further coated with an electrostatic powder for better resistance against the weather.

Filter

A 2-inch filter rail shall be provided in the unit for site installed filter.

Control Panel

The controller in the unit shall be electronically controlled with microcontroller that handles the operation of the unit.

ACSON MALAYSIA SALES & SERVICE SDN.BHD. (129688-D)
a member of ***DAIKIN*** *group*

Lot 4, Lorong 19/1A, Seksyen 19, 46300 Petaling Jaya,
Selangor Darul Ehsan, MALAYSIA.
Tel : +603 7964 8200 Sales Fax : +603 7956 9909
Sernice Fax : +603 7956 9907 Acson Careline : 1300 22 3344

Penang : +604-5377 176
Perak : +605-3129 828
Melaka : +606-2926 196
Johor : +607-3551 599
Pahang : +609 5178 696
Kelantan : +609-7733 688
Sarawak : +6082-344 128
Sabah : +6088-420 205

www.acson.com.my

Authorized Dealer :

Products manufactured in an ISO certified facility.
This document contains the most current product information as of this printing.
For the most up-to-date product information, please logon to www.acson.com.my