Panasonic

Hybrid IP-PBX

Feature Guide

Model KX-TDA30/KX-TDA100
KX-TDA200/KX-TDA600

Thank you for purchasing a Panasonic Hybrid IP-PBX.
Please read this manual carefully before using this product and save this manual for future use.

KX-TDA30: PSMPR Software File Version 3.0000 or later
KX-TDA100/KX-TDA200: PMPR Software File Version 3.0000 or later
KX-TDA600: PLMPR Software File Version 3.1000 or later

Introduction

About this Feature Guide

This Feature Guide is designed to serve as an overall feature reference for the Panasonic Hybrid IP-PBX. It explains what this PBX can do, and how to obtain the most out of its many features and facilities.

This manual contains the following sections:

Section 1, Call Handling Features

Provides details about the call handling features.

Section 2, System Configuration and Administration Features

Provides details about the system configuration and administration features.

Section 3, Appendix

Provides tables listing capacity of system resources, exclusive features for each PBX model, tone and ring tone tables, and the revision history of this Feature Guide.

Index

Provides feature titles and important words to help you access the required information easily.

References Found in the Feature Guide

Installation Manual References

The required installation instruction titles described in the *Installation Manual* are noted for your reference.

Programming Manual References

- **PC Programming Manual**

  The PC Programming titles and parameters described in the *PC Programming Manual* are noted for your reference.
- **PT Programming Manual**

  The PT Programming titles described in the *PT Programming Manual* are noted for your reference.

Feature Guide References

The related feature titles described in this *Feature Guide* are noted for your reference.

User Manual References

The operation required to implement the feature described in the *User Manual* is noted for your reference.

Abbreviations

There are many abbreviations used in this manual (e.g., "PT", for proprietary telephone). Please refer to the list in the next section for the meaning of each abbreviation.

About the other manuals

Along with this Feature Guide, the following manuals are available to help you install, and use this PBX:

Installation Manual

Provides instructions for installing the hardware and maintenance of the PBX.

PC Programming Manual

Provides step-by-step instructions for performing system programming using a PC.

PT Programming Manual

Provides step-by-step instructions for performing system programming using a PT.

User Manual

Provides operating instructions for end users using PTs, SLTs, PSs, or DSS Consoles.

CE

The KX-TDA30E, KX-TDA30NE, KX-TDA30GR, and KX-TDA30CE are designed to interwork with the:
- Analogue Public Switched Telephone Network (PSTN) of European countries
- Pan-European Integrated Services Digital Network (ISDN) using ISDN basic rate access

The KX-TDA100E/KX-TDA200E, KX-TDA100NE/KX-TDA200NE, KX-TDA100GR/KX-TDA200GR, and KX-TDA100CE/KX-TDA200CE are designed to interwork with the:
- Analogue Public Switched Telephone Network (PSTN) of European countries
- Pan-European Integrated Services Digital Network (ISDN) using ISDN basic rate access
- Pan-European Integrated Services Digital Network (ISDN) using ISDN primary rate access
- ONP 2048 kbit/s digital structured leased lines (D2048S)

The KX-TDA600E, KX-TDA600NE, KX-TDA600GR, and KX-TDA600CE are designed to interwork with the:
- Analogue Public Switched Telephone Network (PSTN) of European countries
- Pan-European Integrated Services Digital Network (ISDN) using ISDN basic rate access
- Pan-European Integrated Services Digital Network (ISDN) using ISDN primary rate access
- ONP 2048 kbit/s digital structured leased lines (D2048S)

Panasonic Communications Co., Ltd./Panasonic Communications Company (U.K.) Ltd. declares that this equipment is in compliance with the essential requirements and other relevant provisions of Radio & Telecommunications Terminal Equipment (R&TTE) Directive 1999/5/EC.
Declarations of Conformity for the relevant Panasonic products described in this manual are available for download by visiting:

http://www.doc.panasonic.de

Contact:
Panasonic Services Europe
a Division of Panasonic Marketing Europe GmbH
Panasonic Testing Centre
Winsbergring 15, 22525 Hamburg, Germany

Trademarks

- Microsoft, Windows, and Outlook are either registered trademarks or trademarks of Microsoft Corporation in the United States and/or other countries.
- Intel and Pentium are trademarks or registered trademarks of Intel Corporation or its subsidiaries in the United States and other countries.
- All other trademarks identified herein are the property of their respective owners.

Notes

- The contents of this manual apply to PBXs with a certain software version, as indicated on the cover of this manual. To confirm the software version of your PBX, refer to How do I confirm the software version of the PBX or installed cards? in the FAQ of the PC Programming Manual, or [190] Main Processing (MPR) Software Version Reference in the PT Programming Manual.
- Some optional service cards, PTs, and features are not available in some areas. In the same respect, some optional service cards and features are available exclusively for the KX-TDA30, KX-TDA100, KX-TDA200, or KX-TDA600. Please consult your certified Panasonic dealer for more information.
  → 3.2 Exclusive Features Table
- Product specifications are subject to change without notice. In some cases, additional information, including updates to this and other manuals, is included in the KX-TDA Maintenance Console's **Information Before Programming**. Install the latest version of Maintenance Console to view this information.
- Throughout this manual, PT displays and other displays are shown in English. Other languages may be available, depending on the country or area.
- In this manual, model number suffixes (e.g., KX-TDA100**NE**) are omitted unless necessary.
- All system programming can be performed through PC programming (→ 2.3.1 PC Programming). However, only a subset can be performed through PT programming (→ 2.3.2 PT Programming). In Section 1 Call Handling Features and Section 2 System Configuration and Administration Features, programming references that include a three-digit number, such as "000" indicate that system programming can be performed through PT programming.
  PC Programming
  The number within the brackets indicates the system menu number for the Maintenance Console.
  → 2.12.1 [6-1] System Speed Dial—CO Line Access Number + Telephone Number
  PT Programming
  The number within the brackets indicates the programming number that is entered when performing PT programming.
  → [001] System Speed Dialling Number
  For further details, please refer to the PC Programming Manual and PT Programming Manual.

Feature Highlights

Networking Features

This PBX supports the following networking features:

TIE Line Service

A TIE line is a privately leased communication line between two or more PBXs, which provides cost effective communications between company members at different locations. (→ 1.30.1 TIE Line Service)

Virtual Private Network (VPN)

VPN is a service provided by the telephone company. It uses an existing public line as if it were a private line. (→ 1.30.3 Virtual Private Network (VPN))

QSIG Network

QSIG is a protocol based on ISDN (Q.931) and offers enhanced PBX features in a private network of two or more connected PBXs. (→ 1.30.4 QSIG Standard Features)

Voice over Internet Protocol (VoIP) Network

The PBX can connect to another PBX via a private IP network. In this case, voice signals are converted into IP packets and sent through this network. Automatic rerouting of VoIP calls to public trunks is also available, in case of network difficulties. (→ 1.30.2 Voice over Internet Protocol (VoIP) Network)

Built-in Small Call Centre Features

An incoming call distribution group (→ 1.2.2 Incoming Call Distribution Group Features) can be used as a small call centre with the following features:

Queuing Feature

When a preprogrammed number of extensions in an incoming call distribution group are busy, additional incoming calls can wait in a queue. While calls are waiting in the queue, the calls are handled by the Queuing Time Table, which can be assigned for each time mode (day/lunch/break/night). (→ 1.2.2.4 Queuing Feature)

Log-in/Log-out

Incoming call distribution group members can join (**Log-in**) or leave (**Log-out**) the groups manually. While logged-in, a member extension can have a preprogrammed time period automatically for refusing calls after completing the last call (**Wrap-up**). (→ 1.2.2.7 Log-in/Log-out)

VIP Call

It is possible to assign a priority to incoming call distribution groups. If an extension belongs to multiple groups and the extension becomes idle, queuing calls in the groups will be distributed to the extension in priority order. (→ 1.2.2.5 VIP Call)

Computer Telephony Integration (CTI) Features

Connecting a PC to a DPT, or connecting a CTI Server to this PBX, allows functions of the PC, PBX and extension to be integrated so that, for example, detailed caller information can be taken from a database and displayed on the PC as a call arrives, or the PC can dial numbers for the extension automatically. (→ 1.32.1 Computer Telephony Integration (CTI))

PC Phone/PC Console Features

This PBX supports PC Phone and PC Console. These Panasonic CTI applications provide advanced features combining telephone and PC, such as the ability to display detailed caller information, including a photograph, on the screen of the PC when a call is received, or to dial a telephone number automatically just by selecting a name (1.32.2 PC Phone/PC Console).

Voice Mail Features

This PBX supports Voice Processing Systems (VPS) with DTMF Integration as well as DPT (Digital) Integration, attached locally and over a network. (→ 1.24 Voice Mail Features)

Parallelled Telephone Features

By connecting telephones in parallel, you can increase the number of telephones connected to the PBX without adding additional extension cards. (→ 1.11.9 Parallelled Telephone)

Parallel Mode

An SLT can be connected to an APT or DPT that is connected to a Super Hybrid port of the PBX. The SLT shares the same extension number with the APT or DPT.

EXtra Device Port (XDP) Mode

An SLT can be connected to a DPT that is connected to a Super Hybrid port of the PBX. Unlike parallel mode, XDP mode allows each telephone to act as an independent extension with its own extension number.

Digital XDP

A DPT can be connected to another DPT that is connected to a DPT port or a Super Hybrid port of the PBX. Similar to XDP mode, each DPT acts as an independent extension with its own extension number.

Portable Station (PS) Features

PSs (e.g., KX-TCA255, KX-TD7690) can be connected to this PBX. It is possible to use the PBX features using the PS like a PT. A PS can also be used in parallel with a wired telephone (**Wireless XDP Parallel Mode**). In this case, the wired telephone is the main telephone and the PS is the sub telephone. (→ 1.25 Portable Station (PS) Features)

Hospitality Features

This PBX has several features that support its use in a hotel-type environment. Extensions corresponding to guest rooms can be "checked in" or "checked out" by a designated hotel operator, who can also check or set wake-up calls, and print out records of guest charges. (→ 1.27.1 Hospitality Features—SUMMARY)

Built-in Simplified Voice Message (SVM) Features

By just installing an optional voice message card in the PBX, simple answering machine services can be provided. (→ 1.17.8 Built-in Simplified Voice Message (SVM))

Cellular Phone Features (KX-TDA6920/KX-TDA0920/KX-TDA3920 required)

This PBX supports the use of cellular phones and other outside destinations with the PBX. Cellular phones can be treated as extensions within the PBX, and paired with wired telephones in Cellular Phone XDP Parallel Mode. (→ 1.33.1 Cellular Phone Features—SUMMARY)

List of Abbreviations

A

AA → Automated Attendant
ACD → Automatic Call Distribution
ANI → Automatic Number Identification
AOC → Advice of Charge
APT → Analogue Proprietary Telephone
ARS → Automatic Route Selection

B

BGM → Background Music
BRI → Basic Rate Interface

C

CCBS → Completion of Calls to Busy Subscriber
CF → Call Forwarding—by ISDN
CLI → Calling Line Identification
CLIP → Calling Line Identification Presentation
CLIR → Calling Line Identification Restriction
CNIP → Calling Name Identification Presentation
CNIR → Calling Name Identification Restriction
COLP → Connected Line Identification Presentation
COLR → Connected Line Identification Restriction
CONP → Connected Name Identification Presentation
CONR → Connected Name Identification Restriction
COS → Class of Service
CPC → Calling Party Control
CS → Cell Station
CT → Call Transfer—by ISDN
CTI → Computer Telephony Integration

D

DDI → Direct Dialling In
DID → Direct Inward Dialling
DIL → Direct In Line
DISA → Direct Inward System Access
DND → Do Not Disturb
DPT → Digital Proprietary Telephone
DSS → Direct Station Selection
DTMF → Dual Tone Multi-Frequency

E

EFA → External Feature Access

F

FWD → Call Forwarding

G

G-CO → Group-CO

I

ICD → Incoming Call Distribution
IP-PT → IP Proprietary Telephone
IRNA → Intercept Routing—No Answer
ISDN → Integrated Services Digital Network

L

L-CO → Loop-CO
LCS → Live Call Screening
LED → Light Emitting Diode

M

MCID → Malicious Call Identification
MSN → Multiple Subscriber Number

N

NDSS → Network Direct Station Selection

O

OGM → Outgoing Message
OHCA → Off-hook Call Announcement
OPX → Off Premise Extension

P

P-MP → Point-to-multipoint
P-P → Point-to-Point
PDN → Primary Directory Number
PIN → Personal Identification Number
PRI → Primary Rate Interface
PS → Portable Station
PT → Proprietary Telephone

S

S-CO → Single-CO
SDN → Secondary Directory Number
SLT → Single Line Telephone
SMDR → Station Message Detail Recording
SVM → Built-in Simplified Voice Message

T

TAFAS → Trunk Answer from Any Station
TEI → Terminal Endpoint Identifier
TRG → Trunk Group
TRS/Barring → Toll Restriction/Call Barring

U

UCD → Uniform Call Distribution

V

VM → Voice Mail
VoIP → Voice over Internet Protocol
VPN → Virtual Private Network
VPS → Voice Processing System

X

XDP → EXtra Device Port

Table of Contents

1 Call Handling Features 15
1.1 Incoming Call Features 16
1.1.1 Incoming Trunk Call Features 16
1.1.1.1 Incoming Trunk Call Features—SUMMARY 16
1.1.1.2 Direct In Line (DIL) 20
1.1.1.3 Direct Inward Dialling (DID)/Direct Dialling In (DDI) 22
1.1.1.4 Multiple Subscriber Number (MSN) Ringing Service 25
1.1.1.5 Calling Line Identification (CLI) Distribution 28
1.1.1.6 Intercept Routing 30
1.1.1.7 Intercept Routing—No Destination 35
1.1.2 Internal Call Features 36
1.1.2.1 Internal Call Features—SUMMARY 36
1.1.2.2 Internal Call Block 38
1.1.3 Incoming Call Indication Features 40
1.1.3.1 Incoming Call Indication Features—SUMMARY 40
1.1.3.2 Ring Tone Pattern Selection 41
1.1.3.3 Call Waiting 43
1.2 Receiving Group Features 45
1.2.1 Idle Extension Hunting 45
1.2.2 Incoming Call Distribution Group Features 47
1.2.2.1 Incoming Call Distribution Group Features—SUMMARY 47
1.2.2.2 Group Call Distribution 51
1.2.2.3 Outside Destinations in Incoming Call Distribution Group 55
1.2.2.4 Queuing Feature 57
1.2.2.5 VIP Call 60
1.2.2.6 Overflow Feature 61
1.2.2.7 Log-in/Log-out 64
1.2.2.8 Supervisory Feature 67
1.3 Call Forwarding (FWD)/Do Not Disturb (DND) Features 69
1.3.1 Call Forwarding (FWD)/Do Not Disturb (DND) 69
1.3.1.1 Call Forwarding (FWD)/Do Not Disturb (DND)—SUMMARY 69
1.3.1.2 Call Forwarding (FWD) 70
1.3.1.3 Do Not Disturb (DND) 74
1.3.1.4 FWD/DND Button, Group FWD Button 76
1.4 Answering Features 79
1.4.1 Answering Features 79
1.4.1.1 Answering Features—SUMMARY 79
1.4.1.2 Line Preference—Incoming 80
1.4.1.3 Call Pickup 81
1.4.1.4 Hands-free Answerback 83
1.5 Making Call Features 85
1.5.1 Predialling 85
1.5.2 Automatic Extension Release 86
1.5.3 Intercom Call 87
1.5.4 Trunk Call Features 89
1.5.4.1 Trunk Call Features—SUMMARY 89
1.5.4.2 Emergency Call 90
1.5.4.3 Account Code Entry 91
1.5.4.4 Dial Type Selection 93
1.5.4.5 Reverse Circuit 95
1.5.4.6 Trunk Busy Out 96
1.5.4.7 Pause Insertion 97
1.5.4.8 Host PBX Access Code (Access Code to the Telephone Company from a Host PBX) 98

1.5.4.9 Special Carrier Access Code 100
1.5.5 Seizing a Line Features 101
1.5.5.1 Seizing a Line Features—SUMMARY 101
1.5.5.2 Line Preference—Outgoing 102
1.5.5.3 Trunk Access 103
1.6 Memory Dialling Features 106
1.6.1 Memory Dialling Features 106
1.6.1.1 Memory Dialling Features—SUMMARY 106
1.6.1.2 One-touch Dialling 109
1.6.1.3 KX-T7710 One-touch Dialling 110
1.6.1.4 Last Number Redial 111
1.6.1.5 Speed Dialling—Personal/System 113
1.6.1.6 Quick Dialling 115
1.6.1.7 Hot Line 117
1.7 Primary Directory Number (PDN)/Secondary Directory Number (SDN) Features 118
1.7.1 Primary Directory Number (PDN)/Secondary Directory Number (SDN) Extension 118
1.8 Busy Line/Busy Party Features 124
1.8.1 Automatic Callback Busy (Camp-on) 124
1.8.2 Executive Busy Override 125
1.8.3 Call Monitor 126
1.8.4 Second Call Notification to Busy Extension 128
1.8.4.1 Second Call Notification to Busy Extension—SUMMARY 128
1.8.4.2 Call Waiting Tone 130
1.8.4.3 Off-hook Call Announcement (OHCA) 131
1.8.4.4 Whisper OHCA 132
1.9 Toll Restriction (TRS)/Call Barring (Barring) Features 133
1.9.1 Toll Restriction (TRS)/Call Barring (Barring) 133
1.9.2 Budget Management 138
1.9.3 Extension Dial Lock 139
1.9.4 Dial Tone Transfer 140
1.9.5 Walking COS 142
1.9.6 Verification Code Entry 144
1.10 Automatic Route Selection (ARS) Features 147
1.10.1 Automatic Route Selection (ARS) 147
1.11 Conversation Features 153
1.11.1 Hands-free Operation 153
1.11.2 Off-hook Monitor 154
1.11.3 Mute 155
1.11.4 Headset Operation 156
1.11.5 Data Line Security 158
1.11.6 Flash/Recall/Terminate 159
1.11.7 External Feature Access (EFA) 161
1.11.8 Trunk Call Limitation 163
1.11.9 Parallelled Telephone 165
1.11.10 Calling Party Control (CPC) Signal Detection 169
1.12 Transferring Features 170
1.12.1 Call Transfer 170
1.13 Holding Features 173
1.13.1 Call Hold 173
1.13.2 Call Park 176
1.13.3 Call Splitting 178
1.13.4 Music on Hold 179
1.14 Conference Features 181

1.14.1 Conference Features....181
1.14.1.1 Conference Features—SUMMARY....181
1.14.1.2 Conference....182
1.14.1.3 Privacy Release....184
1.15 Paging Features....185
1.15.1 Paging....185
1.16 Broadcasting Features....188
1.16.1 Broadcasting....188
1.17 Optional Device Features....191
1.17.1 Doorphone Call....191
1.17.2 Door Open....193
1.17.3 Trunk Answer From Any Station (TAFAS)....194
1.17.4 Background Music (BGM)....195
1.17.5 Outgoing Message (OGM)....197
1.17.6 Direct Inward System Access (DISA)....200
1.17.7 Automatic Fax Transfer....211
1.17.8 Built-in Simplified Voice Message (SVM)....213
1.17.9 External Sensor....219
1.17.10 External Relay Control....221
1.18 Caller ID Features....223
1.18.1 Caller ID....223
1.18.2 Incoming Call Log....228
1.19 Message Features....231
1.19.1 Message Waiting....231
1.19.2 Absent Message....235
1.20 Proprietary Telephone (PT) Features....237
1.20.1 Fixed Buttons....237
1.20.2 Flexible Buttons....240
1.20.3 LED Indication....243
1.20.4 Display Information....246
1.21 Integrated Services Digital Network (ISDN) Service Features....248
1.21.1 Integrated Services Digital Network (ISDN)....248
1.21.1.1 Integrated Services Digital Network (ISDN)—SUMMARY....248
1.21.1.2 Calling/Connected Line Identification Presentation (CLIP/COLP)....253
1.21.1.3 Advice of Charge (AOC)....256
1.21.1.4 Call Forwarding (CF)—by ISDN (P-MP)....257
1.21.1.5 Call Forwarding (CF)—by ISDN (P-P)....259
1.21.1.6 Call Hold (HOLD)—by ISDN....261
1.21.1.7 Call Transfer (CT)—by ISDN....262
1.21.1.8 Three-party Conference (3PTY)—by ISDN....263
1.21.1.9 Malicious Call Identification (MCID)....264
1.21.1.10 Completion of Calls to Busy Subscriber (CCBS)....265
1.21.1.11 ISDN Extension....266
1.21.1.12 ISDN Service Access by Keypad Protocol....268
1.22 E1 Line Service Features....269
1.22.1 E1 Line Service....269
1.23 T1 Line Service Features....271
1.23.1 T1 Line Service....271
1.24 Voice Mail Features....273
1.24.1 Voice Mail (VM) Group....273
1.24.2 Voice Mail DTMF Integration....276
1.24.3 Voice Mail DPT (Digital) Integration....283
1.25 Portable Station (PS) Features....290

1.25.1 Portable Station (PS) Connection ... 290
1.25.2 PS Ring Group ... 292
1.25.3 PS Directory ... 295
1.25.4 PS Feature Buttons ... 296
1.25.5 Wireless XDP Parallel Mode ... 297
1.25.6 Virtual PS ... 300
1.26 Administrative Information Features ... 302
1.26.1 Station Message Detail Recording (SMDR) ... 302
1.26.2 Printing Message ... 310
1.26.3 Call Charge Services ... 311
1.27 Hospitality Features ... 314
1.27.1 Hospitality Features—SUMMARY ... 314
1.27.2 Room Status Control ... 315
1.27.3 Call Billing for Guest Room ... 318
1.28 Extension Controlling Features ... 321
1.28.1 Extension Personal Identification Number (PIN) ... 321
1.28.2 Extension Feature Clear ... 323
1.28.3 Walking Extension ... 325
1.28.4 Timed Reminder ... 326
1.29 Audible Tone Features ... 328
1.29.1 Dial Tone ... 328
1.29.2 Confirmation Tone ... 330
1.30 Networking Features ... 332
1.30.1 TIE Line Service ... 332
1.30.2 Voice over Internet Protocol (VoIP) Network ... 356
1.30.3 Virtual Private Network (VPN) ... 359
1.30.4 QSIG Standard Features ... 361
1.30.4.1 QSIG Standard Features—SUMMARY ... 361
1.30.4.2 Calling/Connected Line Identification Presentation (CLIP/COLP) and Calling/Connected Name Identification Presentation (CNIP/CONP)—by QSIG ... 363
1.30.4.3 Call Forwarding (CF)—by QSIG ... 365
1.30.4.4 Call Transfer (CT)—by QSIG ... 367
1.30.4.5 Completion of Calls to Busy Subscriber (CCBS)—by QSIG ... 369
1.30.5 QSIG Enhanced Features ... 370
1.30.5.1 Network Direct Station Selection (NDSS) ... 370
1.30.5.2 Centralised Voice Mail ... 375
1.30.6 Network ICD Group ... 378
1.30.6.1 PS Roaming by Network ICD Group ... 380
1.31 IP Proprietary Telephone (IP-PT) Features ... 382
1.31.1 IP Proprietary Telephone (IP-PT) ... 382
1.32 Computer Telephony Integration (CTI) Features ... 384
1.32.1 Computer Telephony Integration (CTI) ... 384
1.32.2 PC Phone/PC Console ... 387
1.33 Cellular Phone Features ... 389
1.33.1 Cellular Phone Features—SUMMARY ... 389

2 System Configuration and Administration Features ... 391
2.1 System Configuration—Hardware ... 392
2.1.1 Extension Port Configuration ... 392
2.2 System Configuration—Software ... 394
2.2.1 Class of Service (COS) ... 394
2.2.2 Group ... 396

2.2.3 Tenant Service 400
2.2.4 Time Service 405
2.2.5 Operator Features 410
2.2.6 Manager Features 411
2.3 System Data Control 413
2.3.1 PC Programming 413
2.3.2 PT Programming 416
2.3.3 Password Security 418
2.3.4 Quick Setup 420
2.3.5 Automatic Setup 421
2.3.6 Flexible Numbering/Fixed Numbering 423
2.3.7 Floating Extension 430
2.3.8 Software Upgrading 432
2.4 Fault Recovery/Diagnostics 433
2.4.1 Power Failure Transfer 433
2.4.2 Power Failure Restart 435
2.4.3 Local Alarm Information 436

3 Appendix 439
3.1 Capacity of System Resources 440
3.2 Exclusive Features Table 445
3.3 Tones/Ring Tones 446
3.3.1 Tones/Ring Tones 446
3.4 Revision History 448
3.4.1 KX-TDA100/KX-TDA200 PMPR Software File Version 1.1xxx 448
3.4.2 KX-TDA100/KX-TDA200 PMPR Software File Version 2.0xxx 450
3.4.3 KX-TDA100/KX-TDA200/KX-TDA600 PMPR/PLMPR Software File Version 3.0xxx 452
3.4.4 KX-TDA30 PSMPR Software File Version 1.1xxx 454
3.4.5 KX-TDA30 PSMPR Software File Version 2.0xxx 455
3.4.6 KX-TDA30 PSMPR Software File Version 2.2xxx 457
3.4.7 KX-TDA30 PSMPR Software File Version 3.0xxx 459
3.4.8 KX-TDA600 PLMPR Software File Version 3.1xxx 461

Index 463

Section 1

Call Handling Features

1.1 Incoming Call Features

1.1.1 Incoming Trunk Call Features

1.1.1.1 Incoming Trunk Call Features—SUMMARY

Description

Incoming calls via a trunk (public line) are distributed to their destinations according to one of several distribution methods.

1. Available Networking Type for Each Optional Trunk Card Type

Each trunk port of an optional trunk card can be assigned a networking type: Public, Private, or VPN (Virtual Private Network).
→ 2.7.19 [1-1] Slot—T1 Port (KX-TDA100/KX-TDA200/KX-TDA600 only)—Trunk Property (for TIE channel)
→ 2.7.25 [1-1] Slot—E1 Port—Trunk Property (for E & M channel)
→ 2.7.28 [1-1] Slot—E&M Port (KX-TDA100/KX-TDA200/KX-TDA600 only)—Trunk Property
→ 2.16.2 [10-2] DIL Table & Port Settings—DIL—Trunk Property

Trunk Card Type	Channel Type	Networking Type		
		Public (DIL/DID/DDI/MSN)	Private (TIE)*1	Virtual Private Network (VPN)*2
ELCOT/LCOT	—	✔*		
DID	—	✔*		
T1	LCOT	✔*		
	GCOT	✔*		
	DID	✔*		
	TIE (E & M)	✔	✔*	
	OPX (EXTN.)			
E1	DR2	✔*	✔	
	E & M-C	✔	✔*	
	E & M-P	✔	✔*	
E & M	—	✔	✔*	

Trunk Card Type	Channel Type	Networking Type		
		Public (DIL/DID/ DDI/MSN)	Private (TIE)*1	Virtual Private Network (VPN)*2
BRI/PRI	CO	✔*		✔
	Extension			
	QSIG-Master		✔*	
	QSIG-Slave		✔*	
IP-GW	—		✔*	

✔*: Enable (default); ✔: Enable

*1: → 1.30.1 TIE Line Service
*2: → 1.30.3 Virtual Private Network (VPN)

2. Distribution Method

One of the following methods can be assigned to each trunk port:

Method	Description & Reference
Direct In Line (DIL)	Directs a call to a preprogrammed single destination (e.g., the operator). → 1.1.1.2 Direct In Line (DIL)
Direct Inward Dialling (DID)	Directs a call with a DID number from a DID line to a preprogrammed destination. DID is also known as Direct Dialling In (DDI). → 1.1.1.3 Direct Inward Dialling (DID)/Direct Dialling In (DDI)
Multiple Subscriber Number (MSN) Ringing Service	Directs a call with an MSN from an ISDN line to a preprogrammed destination. → 1.1.1.4 Multiple Subscriber Number (MSN) Ringing Service

3. Destination Change with the Caller's Identification Number

The Calling Line Identification (CLI) Distribution feature works in conjunction with the DIL/DID/DDI/MSN features.

Feature	Description & Reference
Calling Line Identification (CLI) Distribution	Directs a call to a CLI destination if the caller's identification number has been assigned in the Caller ID Table. → 1.1.1.5 Calling Line Identification (CLI) Distribution

4. Available Distribution Feature for Each Optional Trunk Card Type

Trunk Card Type	Channel Type	Feature		
		DIL	DID/DDI	MSN
ELCOT/LCOT	—	✔*		
DID	—	✔	✔*	
T1	LCOT	✔*		
	GCOT	✔*		
	DID	✔	✔*	
	TIE (E & M)	✔*	✔	
E1	DR2	✔	✔*	
	E & M-C	✔*	✔	
	E & M-P	✔*	✔	
E & M	—	✔*		
BRI	CO	✔	✔*	✔
PRI	CO	✔	✔*	

✔*: Enable (default); ✔: Enable

5. Available Destinations

Destination	Availability
Wired Extension (PT/SLT/ISDN Extension/T1-OPX)	✔
PS	✔
Incoming Call Distribution Group	✔
PS Ring Group	✔
Floating Extension no. for SVM	✔
VM Group (DTMF/DPT)	✔
External Pager (TAFAS)	✔
DISA	✔
Analogue/ISDN Remote Maintenance	✔
Idle Line Access no. + Phone no.	
Trunk Group Access no. + Trunk Group no. + Phone no.	
Other PBX Extension (TIE with no PBX Code)	✔

Destination	Availability
Other PBX Extension (TIE with PBX Code)	

6. Intercept Routing

After setting distribution, it may also be necessary to set the following features.

Feature		Description & Reference
Intercept Routing	**No Answer (IRNA)**	If a called party does not answer a call within a preprogrammed time period (Intercept time), it is redirected to the preprogrammed destination. → 1.1.1.6 Intercept Routing
	Busy/DND	If a called party is busy or in DND mode, the call is redirected to the preprogrammed destination. → 1.1.1.6 Intercept Routing
	No Destination	If a destination is not assigned, the call is redirected to the operator. → 1.1.1.7 Intercept Routing—No Destination

Programming Manual References

PC Programming Manual

2.7.19 [1-1] Slot—T1 Port (KX-TDA100/KX-TDA200/KX-TDA600 only)—Trunk Property (for TIE channel)

2.7.25 [1-1] Slot—E1 Port—Trunk Property (for E & M channel)

2.7.28 [1-1] Slot—E&M Port (KX-TDA100/KX-TDA200/KX-TDA600 only)—Trunk Property

2.16.2 [10-2] DIL Table & Port Settings—DIL—Trunk Property

PT Programming Manual

None

1.1.1.2 Direct In Line (DIL)

Description

Provides automatic direction of an incoming trunk call to a preprogrammed destination. Each trunk has a destination for each time mode (day/lunch/break/night).

[Method Flowchart]

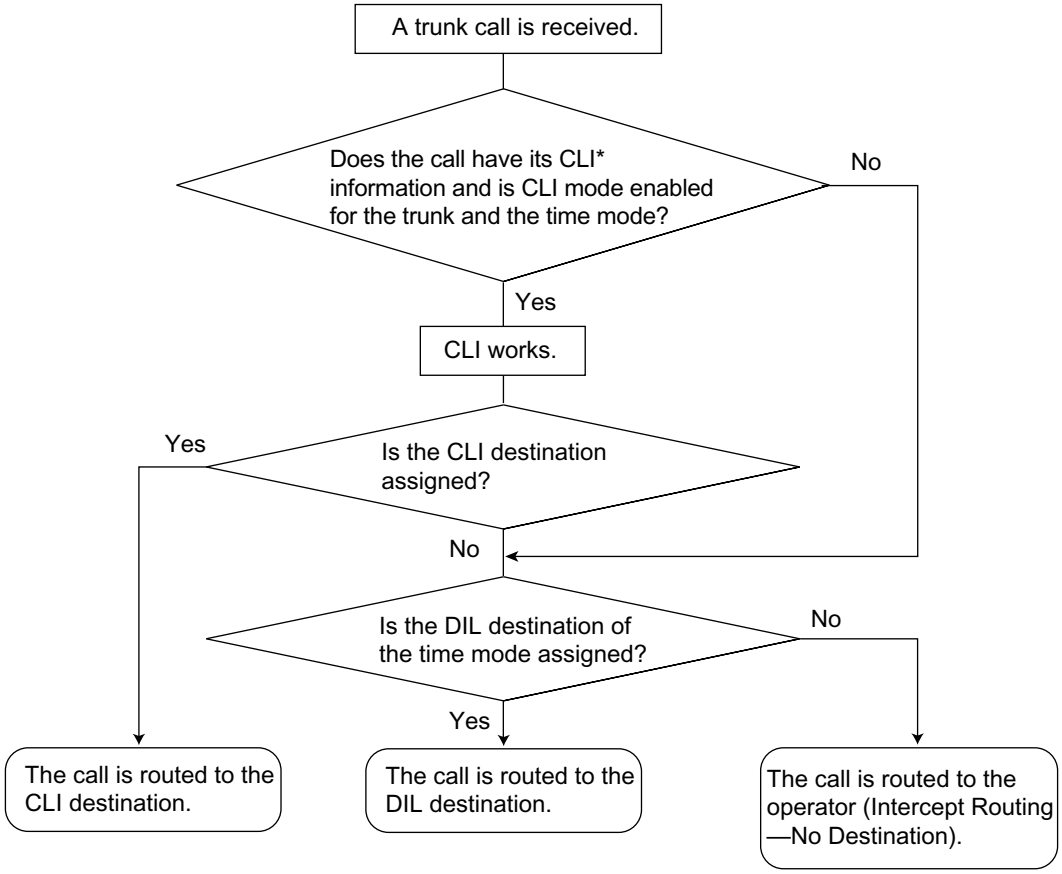

*: Calling Line Identification (CLI) Distribution:
If the CLI routing is enabled and the caller's identification number is assigned in the Caller ID Table, the call will not be routed to the DIL destination, but routed to the CLI destination.

[Programming Example of DIL Table]

The table can be programmed for each trunk.

Trunk No.	CLI			Destination*		
	Day	Lunch	...	Day	Lunch	...
01	Enable	Disable	...	101	100	...
02	Enable	Disable	...	102	100	...
:	:	:	:	:	:	:

*: → 2.16.2 [10-2] DIL Table & Port Settings—DIL—DIL Destination—Day, Lunch, Break, Night
→ [450] DIL 1:1 Destination

Note

Tenant number and VPS trunk group number can also be assigned in the DIL table. Tenant number is used to determine the time mode (day/lunch/break/night) for the corresponding trunk. VPS trunk group number is used in Voice Mail DPT (Digital) Integration.

Explanation:

If a trunk call is received from trunk 01;
In Day mode: CLI is enabled. Route to CLI destination.
In Lunch mode: CLI is disabled. Route to DIL destination, extension 100.

Programming Manual References

PC Programming Manual

2.16.2 [10-2] DIL Table & Port Settings—DIL
→ DIL Destination—Day, Lunch, Break, Night
→ Tenant Number
→ VM Trunk Group

PT Programming Manual

[421] BRI DIL/DDI/MSN Selection
[450] DIL 1:1 Destination

Feature Guide References

1.1.1.5 Calling Line Identification (CLI) Distribution
2.2.3 Tenant Service
2.2.4 Time Service
3.1 Capacity of System Resources

1.1.1.3 Direct Inward Dialling (DID)/Direct Dialling In (DDI)

Description

Provides automatic direction of an incoming call with a DID/DDI number to a preprogrammed destination. Each DID/DDI number has a destination for each time mode (day/lunch/break/night).

[Method Flowchart]

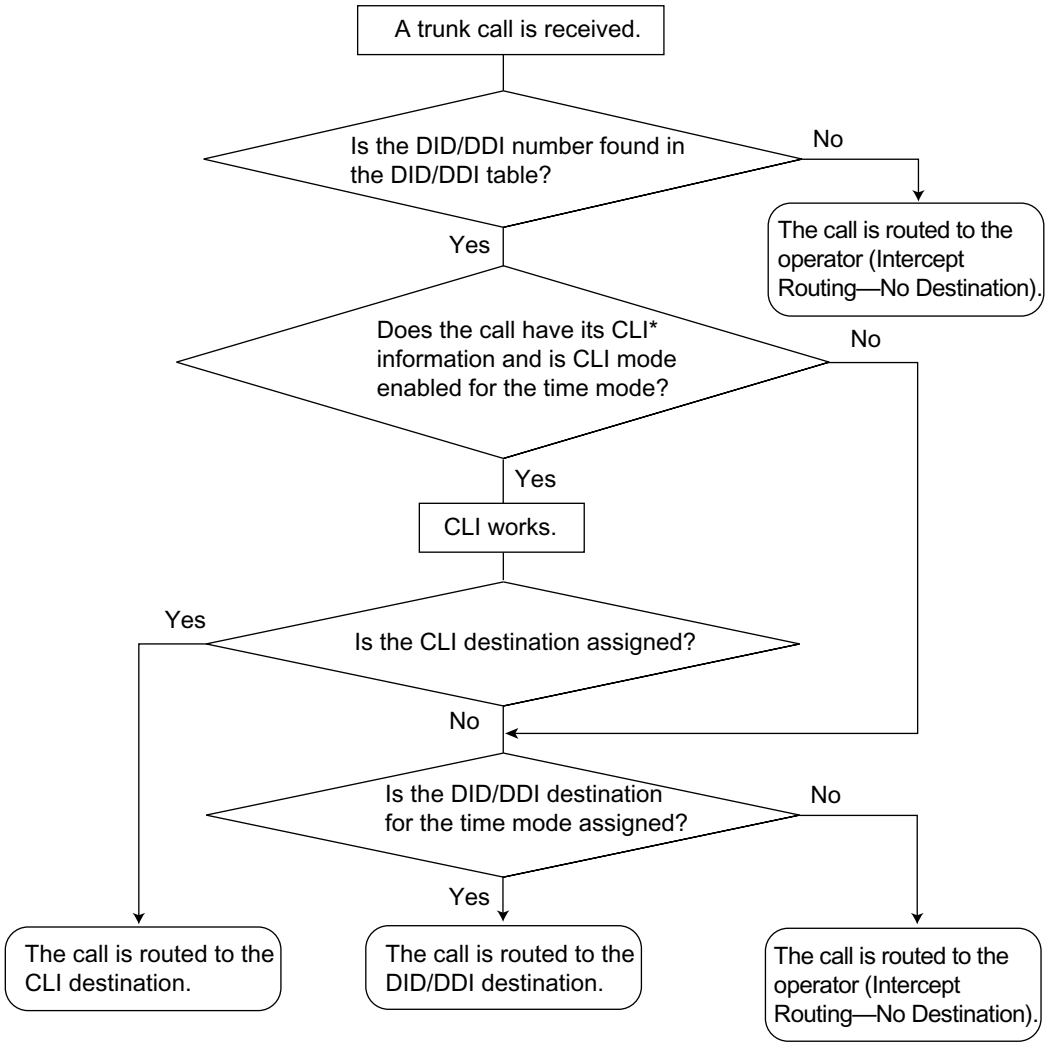

*: Calling Line Identification (CLI) Distribution:
If the CLI routing is enabled and the caller's identification number is assigned in the Caller ID Table, the call will not be routed to the DID/DDI destination, but routed to the CLI destination.

[Programming Example of DID/DDI Table]

DDI can be programmed as DID.

Location	No.*1	Name*2	CLI*3			Destination*4		
			Day	Lunch	...	Day	Lunch	...
0001	123-4567	John White	Enable	Disable	...	105	100	...
0002	123-2468	Tom Smith	Enable	Disable	...	102	100	...
0003	123-456	A company	Enable	Disable	...	101	101	...
:	:	:	:	:	:	:	:	:

*1: → 2.16.3 [10-3] DDI / DID Table—DDI / DID Number
→ [451] DID Number

*2: → 2.16.3 [10-3] DDI / DID Table—DDI / DID Name
→ [452] DID Name

*3: → 2.16.3 [10-3] DDI / DID Table—CLI Ring for DDI/DID—Day, Lunch, Break, Night

*4: → 2.16.3 [10-3] DDI / DID Table—DDI / DID Destination—Day, Lunch, Break, Night
→ [453] DID Destination

Note

Tenant number and VPS trunk group number can also be assigned in the DID/DDI table. Tenant number is used to determine the time mode (day/lunch/break/night) for the corresponding DID/DDI number. VPS trunk group number is used in Voice Mail DPT (Digital) Integration (→ 1.24.3 Voice Mail DPT (Digital) Integration).

Explanation:

If the DID/DDI number is "123-4567":

1. Checks the number in the table.
   → Matches the number in location 0001.
2. Checks the time mode.
   In Day mode: CLI is enabled. Route to CLI destination.
   In Lunch mode: CLI is disabled. Route to DID/DDI destination, extension 100.

Conditions

- To use this feature, DID/DDI service must be assigned as the distribution method for a trunk port.
- **DID/DDI Number Modification**

  It is possible to modify a received DID/DDI number, which may be convenient when programming the DID/DDI table. The modification method (removed number of digits/added number) can be programmed on a trunk port basis.

  [Modification Example]

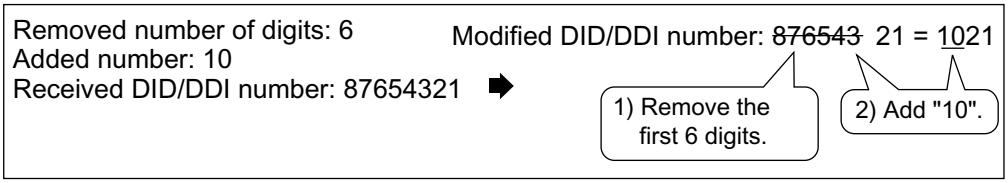

- **Inter-digit Time**
  When the Inter-digit time expires, the PBX stops receiving the DID/DDI number and starts to check the DID/DDI table. (Refer to the [Programming Example of DID/DDI Table] above).
  Even if the Inter-digit time does not expire, the PBX stops receiving the DID/DDI number when the received number is found in the DID/DDI table. The PBX then routes the call to the corresponding destination. If the received number matches several entries in the table, the call is directed to the destination of the first matching entry.
  [Example] If a call is received in Lunch mode;

Received Number	Destination	Explanation
123-4567	Extn. 100	The PBX finds the match in location 0001 in the table after receiving "7". So the call is routed to extension 100.
123-456	Extn. 101	The Inter-digit time expired after receiving "6". The PBX finds the match in location 0003 in the table. So the call is routed to extension 101.

Programming Manual References

PC Programming Manual

2.7.30 [1-1] Slot—DID Card Property

2.8.4 [2-3] Timers & Counters—Miscellaneous—Receiving Dial Inter-digit Timer—DDI / DID

2.16.2 [10-2] DIL Table & Port Settings—Port Setting

→ Distribution Method

→ DDI/DID/TIE/MSN—Remove Digit

→ DDI/DID/TIE/MSN—Additional Dial

2.16.3 [10-3] DDI / DID Table

PT Programming Manual

[421] BRI DIL/DDI/MSN Selection

[451] DID Number

[452] DID Name

[453] DID Destination

Feature Guide References

1.1.1.5 Calling Line Identification (CLI) Distribution

2.2.3 Tenant Service

2.2.4 Time Service

3.1 Capacity of System Resources

1.1.1.4 Multiple Subscriber Number (MSN) Ringing Service

Description

Provides automatic direction of an incoming ISDN-BRI (Basic Rate Interface) line call with an MSN to a preprogrammed destination. One ISDN-BRI port can support a maximum of 10 MSNs. Each MSN has a destination for each time mode (day/lunch/break/night).
Point-to-multipoint must be selected for the ISDN configuration.

[Method Flowchart]

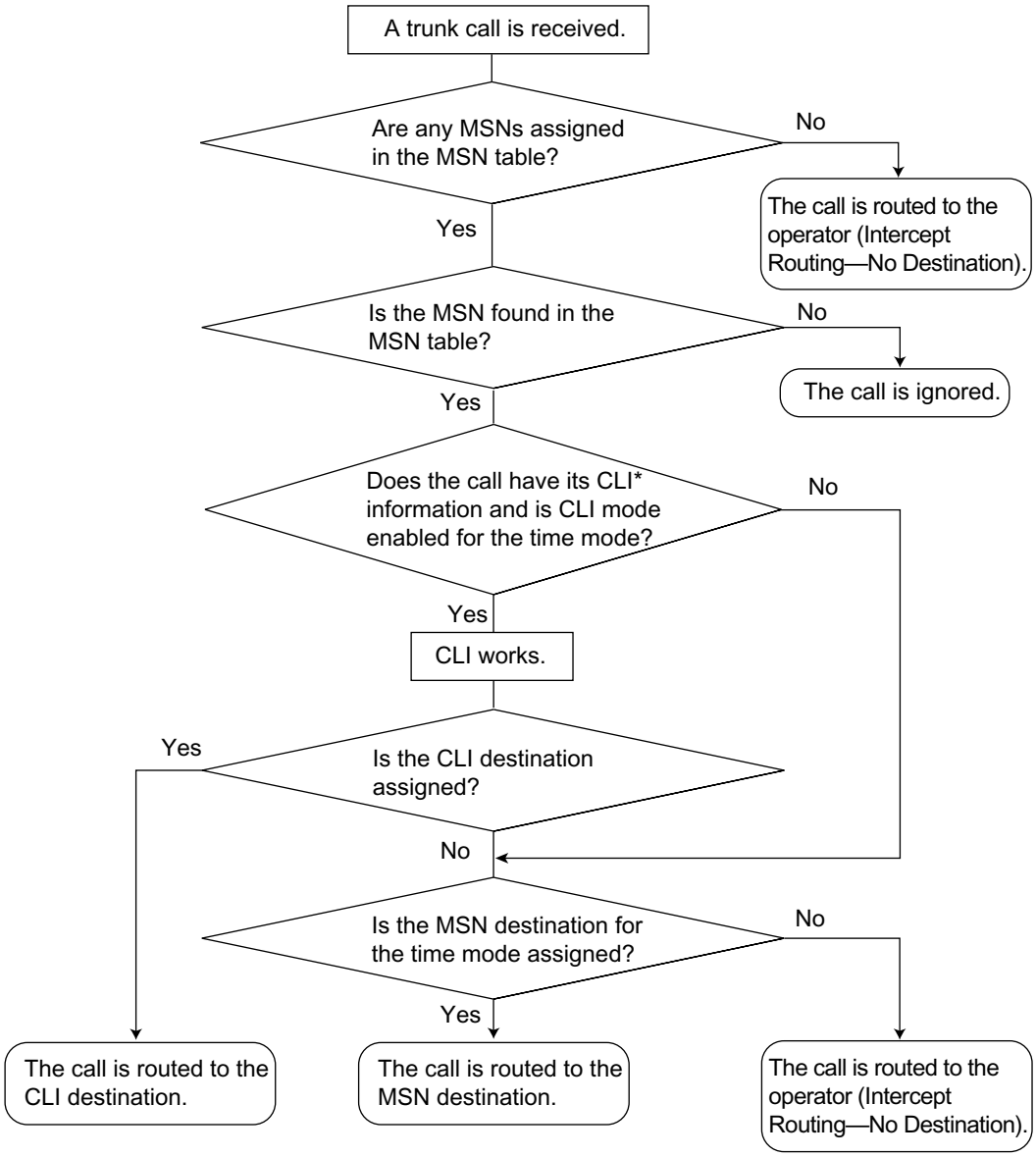

*: Calling Line Identification (CLI) Distribution:
If the CLI routing is enabled and the caller's identification number is assigned in the Caller ID Table, the call will not be routed to the MSN destination, but routed to the CLI destination.

[Programming Example of MSN Table for ISDN BRI Port 1]
A table can be programmed for each ISDN-BRI port. Each BRI port has 10 MSN locations.
→ 2.16.6 [10-4] MSN Table

Location	No.	Name	CLI			Destination		
			Day	Lunch	...	Day	Lunch	...
01	123-4567	A Company	Enable	Disable	...	101	100	...
02	123-2468	C Company	Enable	Disable	...	102	100	...
:	:	:	:	:	:	:	:	:
10	:	:	:	:	:	:	:	:

Note

Tenant number and VPS trunk group number can also be assigned in the MSN table. Tenant number is used to determine the time mode (day/lunch/break/night) for the corresponding MSN. VPS trunk group number is used in Voice Mail DPT (Digital) Integration.
→ 1.24.3 Voice Mail DPT (Digital) Integration

Explanation:

If the MSN "123-4567" is received from BRI port 1:

1. Checks the number in the table.
   → Matches the number in location 01.
2. Checks the time mode.
   In Day mode: CLI is enabled. Route to CLI destination.
   In Lunch mode: CLI is disabled. Route to MSN destination, extension 100.

Conditions

- To use this feature, the MSN service must be assigned as the distribution method for a trunk port.
- **MSN Modification**
  It is possible to modify a received MSN to make it shorter, which may be convenient when programming the MSN table. The modification method (removed number of digits/added number) can be programmed on a trunk port basis.

  [Modification Example]

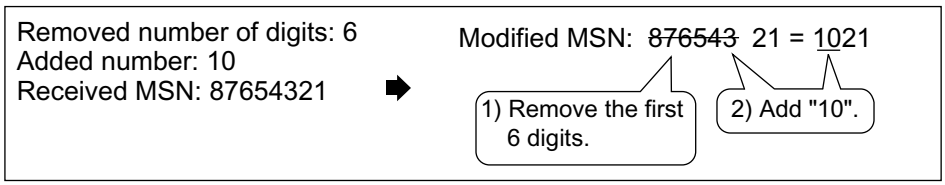

- When using point-to-multipoint configuration with a BRI, do not connect another ISDN terminal device in parallel with the PBX. As only two channels can be used at one time with the BRI, the other ISDN terminal device may monopolise both channels.

Programming Manual References

PC Programming Manual

2.16.2 [10-2] DIL Table & Port Settings—Port Setting
→ Distribution Method
→ DDI/DID/TIE/MSN—Remove Digit
→ DDI/DID/TIE/MSN—Additional Dial

2.16.6 [10-4] MSN Table

PT Programming Manual

[421] BRI DIL/DDI/MSN Selection

[426] BRI Configuration

Feature Guide References

1.1.1.5 Calling Line Identification (CLI) Distribution

2.2.3 Tenant Service

2.2.4 Time Service

3.1 Capacity of System Resources

1.1.1.5 Calling Line Identification (CLI) Distribution

Description

Directs an incoming trunk call to a preprogrammed destination when the caller's identification number (e.g., Caller ID) matches the number in the System Speed Dialling Table that is used as the Caller ID Table. Each Caller ID number (telephone number for each System Speed Dialling number) can have its own destination.

CLI Feature	Description & Reference
Caller ID	Caller's number is sent from an analogue trunk. → 1.18.1 Caller ID
Calling Line Identification Presentation (CLIP)	Caller's number is sent from an ISDN line. → 1.21.1.2 Calling/Connected Line Identification Presentation (CLIP/COLP)
Automatic Number Identification (ANI)	Caller's number is sent from an E1 or T1 line. → 1.22.1 E1 Line Service → 1.23.1 T1 Line Service

CLI always works in conjunction with the following call distribution methods:

a) DIL

b) DID/DDI

c) MSN Ringing Service

Each trunk (for DIL) and the DID/DDI/MSN number can enable or disable the CLI feature for each time mode (day/lunch/break/night) (→ 2.2.4 Time Service).
When the call has Caller ID information and the CLI is enabled for the time mode, the call will be handled by the CLI method.

[Programming Example of System Speed Dialling Table for CLI]

Location (System Speed Dialling No.)	System Speed Dialling Name*1	Telephone No.*2	CLI Destination*3
000	ABC Company	901234567890	200
001	:	:	:
:	:	:	:

*1: → 2.12.1 [6-1] System Speed Dial—Name
→ [002] System Speed Dialling Name
*2: → 2.12.1 [6-1] System Speed Dial—CO Line Access Number + Telephone Number
→ [001] System Speed Dialling Number
*3: → 2.12.1 [6-1] System Speed Dial—CLI Destination

Explanation:

If the caller's number is "0123-456-7890" (The Trunk Access number is disregarded):

1. Checks the number in the table.
   → Matches the number in location 000.
2. The call is routed to the CLI destination, extension 200.

Conditions

- **Automatic Caller ID Number Modification**
  The Caller ID number is used after modification by the Automatic Caller ID Number Modification. (→ 1.18.1 Caller ID)

Programming Manual References

PC Programming Manual

2.16.2 [10-2] DIL Table & Port Settings—DIL—CLI Ring for DIL—Day, Lunch, Break, Night

2.16.3 [10-3] DDI / DID Table—CLI Ring for DDI/DID—Day, Lunch, Break, Night

2.16.6 [10-4] MSN Table—CLI Ring for MSN—Day, Lunch, Break, Night

2.12.1 [6-1] System Speed Dial
→ Name
→ CO Line Access Number + Telephone Number
→ CLI Destination

PT Programming Manual

[001] System Speed Dialling Number

[002] System Speed Dialling Name

Feature Guide References

1.1.1.2 Direct In Line (DIL)

1.1.1.3 Direct Inward Dialling (DID)/Direct Dialling In (DDI)

1.1.1.4 Multiple Subscriber Number (MSN) Ringing Service

1.6.1.5 Speed Dialling—Personal/System

1.1.1.6 Intercept Routing

Description

Provides automatic redirection of incoming trunk and intercom calls. There are two types of Intercept Routing as follows:

Feature	Description
Intercept Routing—No Answer (IRNA)	If a called party does not answer a call within a preprogrammed time period (IRNA Timer), the call is redirected to the preprogrammed destination.
Intercept Routing—Busy	If a called party is already handling a call, new calls are handled as follows: – The call is redirected to the preprogrammed Intercept Routing—Busy destination. – If an Intercept Routing—Busy destination is not enabled, the caller will hear a busy tone. However, if the call is made through an LCOT/ELCOT or T1 [LCOT/GCOT] card, the caller hears a ringback tone.
Intercept Routing—DND	If a called party is in DND mode, the call is redirected to the preprogrammed destination.

Intercept destinations can be assigned to extension ports.

→ 2.10.1 [4-1-1] Wired Extension—Extension Settings—Option 1—Intercept Destination—When called party does not answer—Day, Lunch, Break, Night

→ 2.10.10 [4-2-1] Portable Station—Extension Settings—Main—Intercept Destination—When called party does not answer—Day, Lunch, Break, Night

→ [604] Extension Intercept Destination

When the original destination is:	The Available Intercept Destination is:
• Wired Extension (PT/SLT/T1-OPX) • PS	The destination assigned to the original extension. 2.10.1 [4-1-1] Wired Extension—Extension Settings—Intercept Destination → Intercept Destination—When called party does not answer—Day, Lunch, Break, Night → Intercept Destination—When Called Party is Busy (MPR Software File Version 3.1000 or later) 2.10.10 [4-2-1] Portable Station—Extension Settings—Intercept Destination → Intercept Destination—When called party does not answer—Day, Lunch, Break, Night → Intercept Destination—When Called Party is Busy (MPR Software File Version 3.1000 or later) → [604] Extension Intercept Destination

When the original destination is:	The Available Intercept Destination is:
• ICD Group	The ICD Group Overflow destination assigned to the group. (→ 1.2.2.6 Overflow Feature) → 2.9.10 [3-5-1] Incoming Call Distribution Group—Group Settings—Overflow No Answer—Time out & Manual Queue Redirection—Destination-Day, Lunch, Break, Night → [625] Destination for Overflow Time Expiration
• VM Group (DTMF/DPT)	The destination assigned to the first extension of the VM group.
• DISA*	If all DISA ports are busy when a call is made using DISA, one of the following can be selected through system programming: • **Disable:** Busy tone is sent to the caller. • **Operator:** The call will be redirected to the operator. • **AA-0, AA-9:** The call will be redirected to the destination assigned to that AA number. → 2.11.3 [5-3-1] Voice Message—DISA System—Option 1—DISA Intercept—Intercept when all DISA ports are busy (MPR Software File Version 3.1000 or later)
• PS Ring Group** • External Pager (TAFAS)** • Analog/ISDN Remote Maintenance • Other PBX Extension (TIE with no PBX Code)	Not assignable (Intercept Routing is not available.)

*: Intercept Routing for DISA will redirect a call only if all of the Direct Inward System Access (DISA) ports are busy. Once the call reaches the destination extension by using the DISA feature, the Intercept Routing feature of the extension is used.

** By assigning the forward destination of a Virtual PS to a PS Ring Group or external pager, and assigning Intercept Routing destinations to the Virtual PS, calls to these destinations will be redirected to the Intercept Routing destination of the Virtual PS.

Programming Example

<Forward Destination of Virtual PS>

Ext. No. of the Virtual PS	FWD Destination
2001	600
...	...

"600" is an example of a Floating Extension No. for the External Pager

<Intercept Destination of Virtual PS>

Ext. No. of the Virtual PS	Intercept Destination				...
	Day	Lunch	Break	Night	
2001	1001	1001	1001	1001	...
...	...	...	...	...	...

When extension 2001 is called from another extension or is the first destination of an incoming trunk call, etc., the call will ring at extension 600 (external pager) first, and then ring at the intercept destination (extension 1001) after the IRNA Timer expires.

Different intercept destinations can be programmed for each time mode (day/lunch/break/night).

[Available Intercept Destinations]

Intercept Destination	Availability
Wired Extension (PT/SLT/ISDN Extension/T1-OPX)	✔
PS	✔
Incoming Call Distribution Group	✔
PS Ring Group	✔
Floating Extension no. for SVM	✔
VM Group (DTMF/DPT)	✔
External Pager (TAFAS)	✔
DISA	✔
Analogue/ISDN Remote Maintenance	✔
Idle Line Access no. + Phone no.	✔
Trunk Group Access no. + Trunk Group no. + Phone no.	✔
Other PBX Extension (TIE with no PBX Code)	✔
Other PBX Extension (TIE with PBX Code)	✔

Conditions

[General]

- **Intercept Routing—DND on/off**
  Intercept Routing—DND can be enabled or disabled system programming.
  If disabled, one of the following is activated depending on the type of line that a call arrives through:
  a) **ELCOT, LCOT, or T1 (LCOT/GCOT) Card:** The incoming trunk call will ring at the original destination while the caller hears a ringback tone.
  b) **Other Trunk Cards:** A busy tone will be sent to the caller.
- **If the intercept destination cannot receive the call:**
  a) **Intercept Routing—No Answer:** Intercept timer will restart at the original destination, until the call is answered.
  b) **Intercept Routing—Busy/DND:** The call will be sent back to the original destination when the call arrives through the ELCOT, LCOT or T1 (LCOT/GCOT) card. When the call arrives through other trunk cards the caller will hear a busy tone.
- **Idle Extension Hunting**
  If an extension is a member of an idle extension hunting group, calls to that extension will not be redirected by Intercept Routing—Busy/DND. If the extension is busy or in DND mode, calls to that extension will be redirected to the next extension in the idle extension hunting group.
- Intercept Routing for intercom calls can be enabled or disabled on a system basis.
  → 2.16.7 [10-5] Miscellaneous—Intercept—Intercept Routing for Extension Call (MPR Software File Version 3.1000 or later)
- **IRNA Timer**
  The IRNA timer can be set on a system basis and an extension basis for each time mode (day, lunch, break, night).
  → 2.10.1 [4-1-1] Wired Extension—Extension Settings—Intercept Destination—Intercept No Answer Time—Day, Lunch, Break, Night (MPR Software File Version 3.1000 or later)
- The Intercept Routing destination for each time mode will not apply for Intercept Routing—Busy. When the original destination is busy, the call is redirected to the Intercept Routing—Busy destination assigned through system programming. If no destination is assigned the caller will hear a busy tone.
- When a call arrives at an extension that is currently receiving a call, the call will be redirected to the extension's Intercept Routing—No Answer destination for each time mode.
- The time modes that are selected for trunk calls arriving at extensions and VM groups are decided on a tenant basis.

[MPR Software File Version 3.0000]

- This feature cannot be performed on incoming intercom calls.
- Calls redirected by intercept Routing—No Answer/Busy/DND are directed to the same destination.
- When the original destination for a call is a PS Ring Group, VM Group (DTMF/DPT) or External Pager (TAFAS), the intercept destination is assigned to the trunk group carrying the call.
  When the original destination is DISA, Intercept Routing will only redirect the call if the DISA line is busy. Once the call reaches the destination extension using the DISA feature, the call can be redirected to the Intercept Routing destination assigned to that extension.
  → 2.9.1 [3-1-1] Trunk Group—TRG Settings—Intercept (not available for MPR Software File Version 3.1000 or later)—Intercept Destination—Day, Lunch, Break, Night (not available for MPR Software File Version 3.1000 or later)
  → [470] Trunk Group Intercept Destination (not applicable for MPR Software File Version 3.1000 or later)
- **Intercept Routing—Busy/DND on/off**
  Intercept Routing—Busy and Intercept Routing—DND can be enabled or disabled separately through

system programming.
If disabled, one of the following is activated depending on the trunk card type that a call arrives through:

→ 2.16.7 [10-5] Miscellaneous

→ Intercept—Intercept Routing - Busy (Destination is busy) (not available for MPR Software File Version 3.1000 or later)

→ Intercept—Intercept Routing - DND (Destination sets DND)

a) ELCOT/LCOT or T1 (LCOT/GCOT) Card: The incoming trunk call will ring at the original destination while the caller hears a ringback tone.

b) Other Trunk cards: A busy tone will be sent to the caller.

- **IRNA Timer**
  The IRNA Timer cannot be set on an extension basis.

Programming Manual References

PC Programming Manual

2.8.4 [2-3] Timers & Counters

→ Dial / IRNA / Recall / Tone—Intercept Routing No Answer (IRNA)—Day, Lunch, Break, Night

→ DISA / Door / Reminder / U. Conf—DISA—Intercept Timer—Day, Lunch, Break, Night

2.9.1 [3-1-1] Trunk Group—TRG Settings—Intercept (not available for MPR Software File Version 3.1000 or later)—Intercept Destination—Day, Lunch, Break, Night (not available for MPR Software File Version 3.1000 or later)

2.9.10 [3-5-1] Incoming Call Distribution Group—Group Settings—Overflow No Answer—Time out & Manual Queue Redirection—Destination-Day, Lunch, Break, Night

2.10.1 [4-1-1] Wired Extension—Extension Settings

→ Intercept Destination

→ Intercept No Answer Time

2.10.10 [4-2-1] Portable Station—Extension Settings

→ Intercept Destination

→ Intercept No Answer Time

2.11.3 [5-3-1] Voice Message—DISA System—Option 1—DISA Intercept—Intercept when all DISA ports are busy (MPR Software File Version 3.1000 or later)

2.16.7 [10-5] Miscellaneous

→ Intercept—Intercept Routing - Busy (Destination is busy) (not available for MPR Software File Version 3.1000 or later)

→ Intercept—Intercept Routing - DND (Destination sets DND)

→ Intercept—Routing to Operator - No Destination (Destination is not programmed)

→ Intercept—Intercept Routing for Extension Call (MPR Software File Version 3.1000 or later)

PT Programming Manual

[203] Intercept Time

[470] Trunk Group Intercept Destination (not applicable for MPR Software File Version 3.1000 or later)

[604] Extension Intercept Destination

[625] Destination for Overflow Time Expiration

Feature Guide References

1.3.1 Call Forwarding (FWD)/Do Not Disturb (DND)

1.1.1.7 Intercept Routing—No Destination

Description

Provides automatic redirection of incoming trunk calls that do not have a destination assigned. The intercept destination is an operator (tenant/PBX).

Conditions

- **Intercept Routing—No Destination on/off**
  The Intercept Routing—No Destination feature can be enabled or disabled through system programming.
  If disabled, a reorder tone will be sent to the caller. However, the Intercept Routing—No Destination feature always functions for calls through the ELCOT, LCOT, or T1 (LCOT/GCOT) card even when disabled.
- **If an operator (tenant/PBX) is not assigned:**
  The extension connected to the lowest-numbered jack will be the intercept destination.
- Intercept Routing—No Destination also applies to calls from doorphones.

Programming Manual References

PC Programming Manual

2.8.3 [2-2] Operator & BGM—PBX Operator—Day, Lunch, Break, Night

2.16.7 [10-5] Miscellaneous—Intercept—Routing to Operator - No Destination (Destination is not programmed)

PT Programming Manual

[006] Operator Assignment

Feature Guide References

2.2.5 Operator Features

1.1.2 Internal Call Features

1.1.2.1 Internal Call Features—SUMMARY

Description

The following types of internal calls are available:

Feature	Description & Reference
Intercom Call	A call from one extension to another. → 1.5.3 Intercom Call
Doorphone Call	When a call from a doorphone reaches its destination, the recipient can talk to the visitor. → 1.17.1 Doorphone Call

[Available Destination]

The destinations of doorphone calls can be assigned for each time mode (day/lunch/break/night) (→ 2.2.4 Time Service) on a doorphone port basis.

Destination	Calling from	
	Extension	Doorphone
Wired Extension (PT/SLT/ISDN Extension/T1-OPX)	✔	✔
PS	✔	✔
Incoming Call Distribution Group	✔	✔
PS Ring Group	✔	✔
Floating Extension no. for SVM		
VM Group (DTMF/DPT)	✔	✔
External Pager (TAFAS)	✔	✔
DISA		
Analogue/ISDN Remote Maintenance	✔	
Idle Line Access no. + Phone no.	✔	✔
Trunk Group Access no. + Trunk Group no. + Phone no.	✔	✔
Other PBX Extension (TIE with no PBX Code)	✔	✔
Other PBX Extension (TIE with PBX Code)	✔	✔

✔: Available

Programming Manual References

PC Programming Manual

2.11.1 [5-1] Doorphone—Destination—Day, Lunch, Break, Night

PT Programming Manual

[720] Doorphone Call Destination

1.1.2.2 Internal Call Block

Description

Internal calls can be restricted on a COS basis. This is done by specifying which COS destinations are blocked for each COS.

[Programming Example]

Caller	Called Party			
	COS 1	COS 2	COS 3	...
COS 1				
COS 2		✔	✔	✔
COS 3	✔	✔		✔
:	:	:	:	:

✔: Block

Explanation:

a) COS 1 extensions can make calls to all extensions.

b) COS 2 extensions can make calls to COS 1 destinations only. (COS 2 extensions cannot make calls to COS 2 destinations.)

c) COS 3 extensions can make calls to COS 3 destinations only.

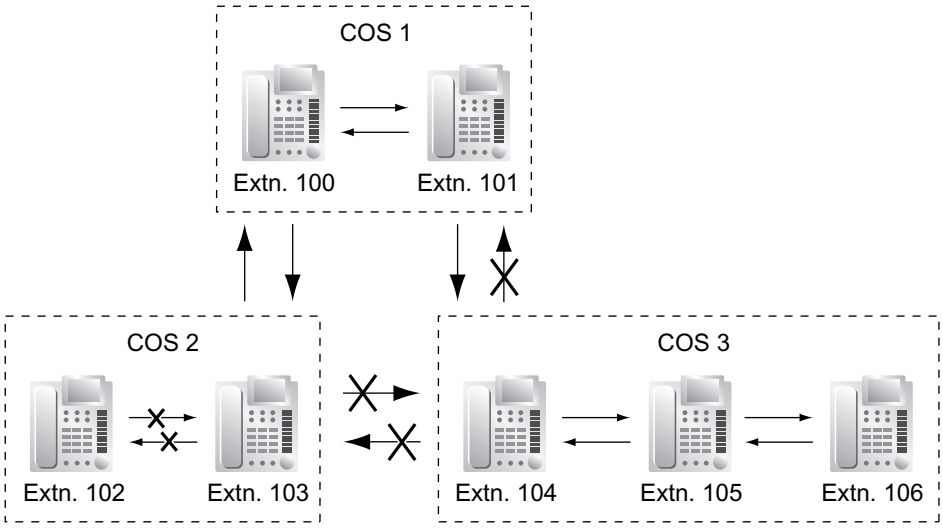

Conditions

- Restricted extension numbers cannot be used as the parameter of a feature setting (e.g., FWD)
- All extensions can make an Operator Call (→ 2.2.5 Operator Features) regardless of Internal Call Block.
- This feature can also restrict calling a doorphone from an extension on the basis of the COSs assigned to the extension and doorphone port. (→ 1.17.1 Doorphone Call)

Programming Manual References

PC Programming Manual

2.8.13 [2-7-3] Class of Service—Internal Call Block—COS Number of the Extension Which Receive the Call from Other Extension 1–64

2.9.10 [3-5-1] Incoming Call Distribution Group—Group Settings—Main—COS

2.10.1 [4-1-1] Wired Extension—Extension Settings—Main—COS

2.10.10 [4-2-1] Portable Station—Extension Settings—Main—COS

2.11.1 [5-1] Doorphone—COS

2.11.6 [5-4] External Relay—COS Number

PT Programming Manual

None

Feature Guide References

2.2.1 Class of Service (COS)

1.1.3 Incoming Call Indication Features

1.1.3.1 Incoming Call Indication Features—SUMMARY

Description

Incoming calls are indicated by various methods as follows:

Type	Feature	Description & Reference
Ring Tone	**Ring Tone Pattern Selection**	A telephone rings when receiving a call. The ring tone patterns can be changed for each incoming call type. → 1.1.3.2 Ring Tone Pattern Selection
Voice-calling	**Alternate Receiving—Ring/Voice**	A PT user can select to receive intercom calls by ring tone or by voice, through personal programming. → 1.5.3 Intercom Call
LED (Light Emitting Diode)	**LED Indication**	The light shows line conditions with a variety of light patterns. → 1.20.3 LED Indication
Display (Caller's Information)	**Display Information**	The display shows the caller's information. → 1.20.4 Display Information
External Pager	**Trunk Answer from Any Station (TAFAS)**	The external pager sends a ring tone when receiving a call. → 1.17.3 Trunk Answer From Any Station (TAFAS)
Tone/Voice during a Conversation	**Call Waiting**	A busy extension hears a tone, or voice from the handset/built-in speaker indicating that another incoming call is waiting. → 1.1.3.3 Call Waiting

1.1.3.2 Ring Tone Pattern Selection

Description

It is possible to select the type of ring tone pattern that arrives at an extension for each type of incoming call, etc.

[Ring Tone Patterns]

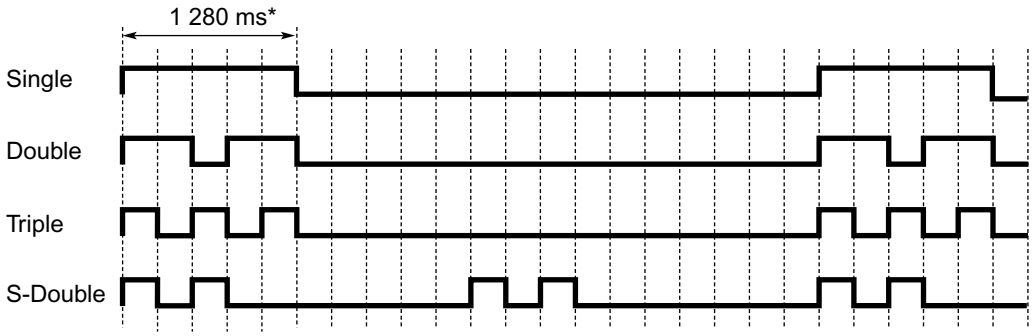

*: The duration of a ring tone may vary by country/area.

[Ring Tone Pattern Table]
The ring tone pattern table is categorised into three parts, each containing a specified number of pattern plans.
The ring tone pattern table is categorised as follows:

- Incoming Trunk Calls: each pattern plan can assign a ring tone pattern for each trunk group.
  → 2.8.14 [2-8-1] Ring Tone Patterns—Call from CO
- Incoming Doorphone Calls: each pattern plan can assign a ring tone pattern for each doorphone.
  → 2.8.15 [2-8-2] Ring Tone Patterns—Call from Doorphone
- Others: each pattern plan can assign a ring tone pattern for incoming intercom calls as well as ring tones assigned to certain features (e.g., timed reminder).
  → 2.8.16 [2-8-3] Ring Tone Patterns—Call from Others

The ring tone patterns that arrive at an extension are determined by the pattern plan that is assigned to that extension through system programming.

[Programming Example of Ring Tone Pattern Table]

Table No.	Intercom Call/Hold Recall	Trunk Call/Hold Recall			Doorphone Call			Timed Reminder	Call Back	LCS	External Sensor
		TRG1	TRG2	...	Port 1	Port 2	...				
1	Double	Single			Single						
2	Single	Double			Double						
:	:	:	:	:	:	:	:	:	:	:	:

Conditions

- "**PT Ring off Setting**" can be enabled or disabled through system programming. If disabled, PT users cannot turn incoming call ringing off for their extension.

Programming Manual References

PC Programming Manual

2.8.14 [2-8-1] Ring Tone Patterns—Call from CO—Ring Tone Pattern Plan 1–8
2.8.15 [2-8-2] Ring Tone Patterns—Call from Doorphone—Ring Tone Pattern Plan 1–8
2.8.16 [2-8-3] Ring Tone Patterns—Call from Others—Extension—Ring Tone Pattern Plan 1–8
2.8.17 [2-9] System Options—Option 1—PT Operation—PT Ring Off Setting
2.10.1 [4-1-1] Wired Extension—Extension Settings—Main—Ring Pattern Table
2.10.10 [4-2-1] Portable Station—Extension Settings—Main—Ring Pattern Table

PT Programming Manual

None

Feature Guide References

3.1 Capacity of System Resources

1.1.3.3 Call Waiting

Description

Used to inform a busy extension that another incoming call is waiting. The busy extension user can answer the second call by disconnecting the current call or placing it on hold.
The following notification method can be assigned for each extension depending on the call waiting and the telephone type:

a) **Call Waiting Tone:** Tone from the handset or built-in speaker

b) **OHCA:** Voice from the built-in speaker

c) **Whisper OHCA:** Voice from the handset

d) **Off:** No notification.

Call Type	Notification Method	
	DPT	Other Telephone
Intercom Call	Call Waiting tone/OHCA/ Whisper OHCA/Off	Call Waiting tone/Off
Trunk Call*	Call Waiting tone/Off	

*: Including a doorphone call, call via an incoming call distribution group, and a trunk call transferred from another extension.

This feature is also known as Busy Station Signalling (BSS).

Conditions

- **Automatic Call Waiting**
  Through system programming, it is possible to select whether a call waiting tone is automatically sent to the extension when receiving trunk calls, doorphone calls, external sensor calls and hold-recall calls. Through system programming, it is also possible to select whether extensions will receive Automatic Call Waiting from intercom calls.
  Automatic Call Waiting for intercom calls is only available for MPR Software File Versions 3.1000 or later.
- Call Waiting call for an extension in a VM group (DPT/DTMF) is not available.
- **Data Line Security**
  Setting Data Line Security cancels the Call Waiting setting. (→ 1.11.5 Data Line Security)
- **Call Waiting Tone**
  A PT user can hear different Call Waiting tones for trunk call and intercom call if "**Tone 2**" has been selected through personal programming (Call Waiting Tone Type Selection). If "**Tone 1**" has been selected, the same Call Waiting tone will be heard for both trunk call and intercom call.
  All Call Waiting tone patterns have a default (→ 3.3.1 Tones/Ring Tones).
- **Caller Information**
  With the Call Waiting tone, the caller's information flashes on the display for five seconds, followed by a 10-second pause, then flashes again for five seconds.
- **Call Waiting from the Telephone Company**
  Besides the Call Waiting service within the PBX, the Call Waiting tone offered by an analogue line from the telephone company informs the extension user of another incoming trunk call that is waiting. He can answer the second call by disconnecting the current call or placing it on hold using EFA. For details, consult your telephone company.

Call Waiting Caller ID (Visual Caller ID):
When using the call waiting tone supplied by the telephone company over analogue lines, the waiting caller's telephone number can be received. The number will flash on the display for five seconds, followed by a 10-second pause, then flash again for five seconds.
Note that the received caller information will not be displayed on telephones or wireless phones connected to SLT ports.

Programming Manual References

PC Programming Manual

2.7.10 [1-1] Slot—LCO Card Property—Caller ID—Caller ID Signalling

2.8.8 [2-6-1] Numbering Plan—Main—Features

→ Call Waiting Mode: Manual Call Waiting for Extension Call

→ Call Waiting Mode: Automatic Call Waiting

2.8.10 [2-6-3] Numbering Plan—B/NA DND Call Feature

→ BSS / OHCA / Whisper OHCA / DND Override

→ BSS / OHCA / Whisper OHCA / DND Override-2

2.8.17 [2-9] System Options—Option 5—Call Waiting—Automatic Call Waiting for Extension Call (MPR Software File Version 3.1000 or later)

2.10.1 [4-1-1] Wired Extension—Extension Settings

→ Option 2—Manual C. Waiting for Extension Call

→ Option 2—Automatic C. Waiting

→ Option 4—Call Waiting Tone Type

2.10.10 [4-2-1] Portable Station—Extension Settings

→ Option 2—Manual C. Waiting for Extension Call

→ Option 2—Automatic C. Waiting

→ Option 4—Call Waiting Tone Type

PT Programming Manual

None

Feature Guide References

1.8.4 Second Call Notification to Busy Extension

1.18.2 Incoming Call Log

1.26.1 Station Message Detail Recording (SMDR)

User Manual References

1.4.4 Answering Call Waiting

1.8.3 Receiving Call Waiting (Call Waiting/Off-hook Call Announcement [OHCA]/Whisper OHCA)

3.1.2 Settings on the Programming Mode

1.2 Receiving Group Features

1.2.1 Idle Extension Hunting

Description

If a called extension is busy or in DND mode, Idle Extension Hunting redirects the incoming call to an idle member of the same idle extension hunting group, which can be programmed through system programming. Idle extensions are automatically searched according to a preprogrammed hunting type.

This feature is also known as Station Hunting.

Type	Description
Circular Hunting	An idle extension is searched for in the order specified in the idle extension hunting group in a circular way. 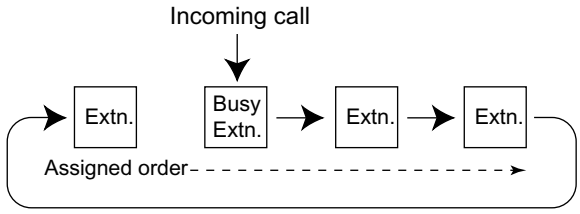
Terminated Hunting	An idle extension is searched for in the order specified in the idle extension hunting group until reaching the last assigned extension. 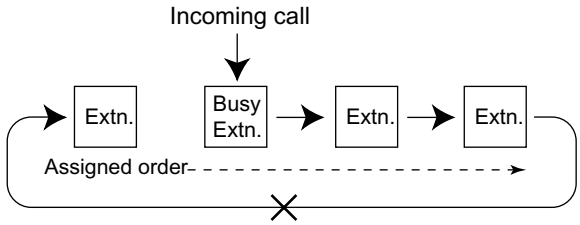

Conditions

- **Idle Extension Hunting applies to:**
  Intercom, trunk, and doorphone calls to a single destination.
- An extension user can belong to only one idle extension hunting group.
- **If all the searched extensions are busy:**
  The PBX redirects the call to an overflow destination which can be assigned for each idle extension hunting group and each time mode (day/lunch/break/night) (→ 2.2.4 Time Service).
  [Available Destination]

Destination	Availability
Wired Extension (PT/SLT/ISDN Extension/T1-OPX)	✔
PS	✔
Incoming Call Distribution Group	✔

Destination	Availability
PS Ring Group	✔
VM Group (DTMF/DPT)	✔
External Pager (TAFAS)	✔
DISA	✔
Analogue/ISDN Remote Maintenance	✔
Idle Line Access no. + Phone no.	✔
Trunk Group Access no. + Trunk Group no. + Phone no.	✔
Other PBX Extension (TIE with no PBX Code)	✔
Other PBX Extension (TIE with PBX Code)	✔

- **FWD/DND Mode**
  While searching for an idle extension within an idle extension hunting group, any extension that has set FWD—All Calls or DND feature will be skipped, and the call will go to the next extension in the group.

Programming Manual References

PC Programming Manual

2.9.14 [3-6] Extension Hunting Group

2.9.15 [3-6] Extension Hunting Group—Member List

PT Programming Manual

[680] Idle Extension Hunting Type

[681] Idle Extension Hunting Group Member

Feature Guide References

1.3.1 Call Forwarding (FWD)/Do Not Disturb (DND)

3.1 Capacity of System Resources

1.2.2 Incoming Call Distribution Group Features

1.2.2.1 Incoming Call Distribution Group Features—SUMMARY

Description

An incoming call distribution group is a group of extensions programmed through system programming.
→ 2.9.13 [3-5-4] Incoming Call Distribution Group—Member
→ [620] Incoming Call Distribution Group Member

An incoming call distribution group receives calls directed to the group. Each incoming call distribution group has a floating extension number (default: 6 + two-digit group number).
Incoming calls directed to an incoming call distribution group are distributed to the member extensions in the group using a distribution method. When a preprogrammed number of extensions in the group are busy, the incoming calls can wait in a queue.
Each incoming call distribution group and member extensions can be programmed as desired to handle incoming calls. Calls to the group can be monitored by an extension assigned as a supervisor.

2.9.10 [3-5-1] Incoming Call Distribution Group—Group Settings
→ Main
→ Overflow Queuing Busy
→ Overflow No Answer
→ Miscellaneous

Programming Item Example for Incoming Call Distribution Group 1 with Diagram
A through F in the table are described in the following diagram.

A			B	C	D	E	F					
Group No.	Floating Extn. No.*1	Group Name*2	Distribution Method*3	Max. No. of Busy Extensions*4	Queuing Call Capacity*5	Hurry-up Level*6	Overflow Time*7	Overflow Destination*8				Tenant No.*9
								Day	···	···	Night	
1	601	Sales	Ring	3	5	3	60	100	···	···	100	1
2	602	Engineering	UCD	Max.	11	8	90	200	···	···	200	5
3												
:												

*1: → [622] Incoming Call Distribution Group Floating Extension Number
*2: → [623] Incoming Call Distribution Group Name
*3: → [624] Incoming Call Distribution Group Distribution Method
*4: → [632] Maximum Number of Agents
*5: → [628] Queuing Call Capacity
*6: → [629] Queuing Hurry-up Level
*7: → [626] Overflow Time
*8: → [625] Destination for Overflow Time Expiration/[627] Destination When All Busy
*9: The tenant number is required to determine the time mode (day/lunch/break/night) (→ 2.2.4 Time Service) and the music source (for Music on Hold) for each group.

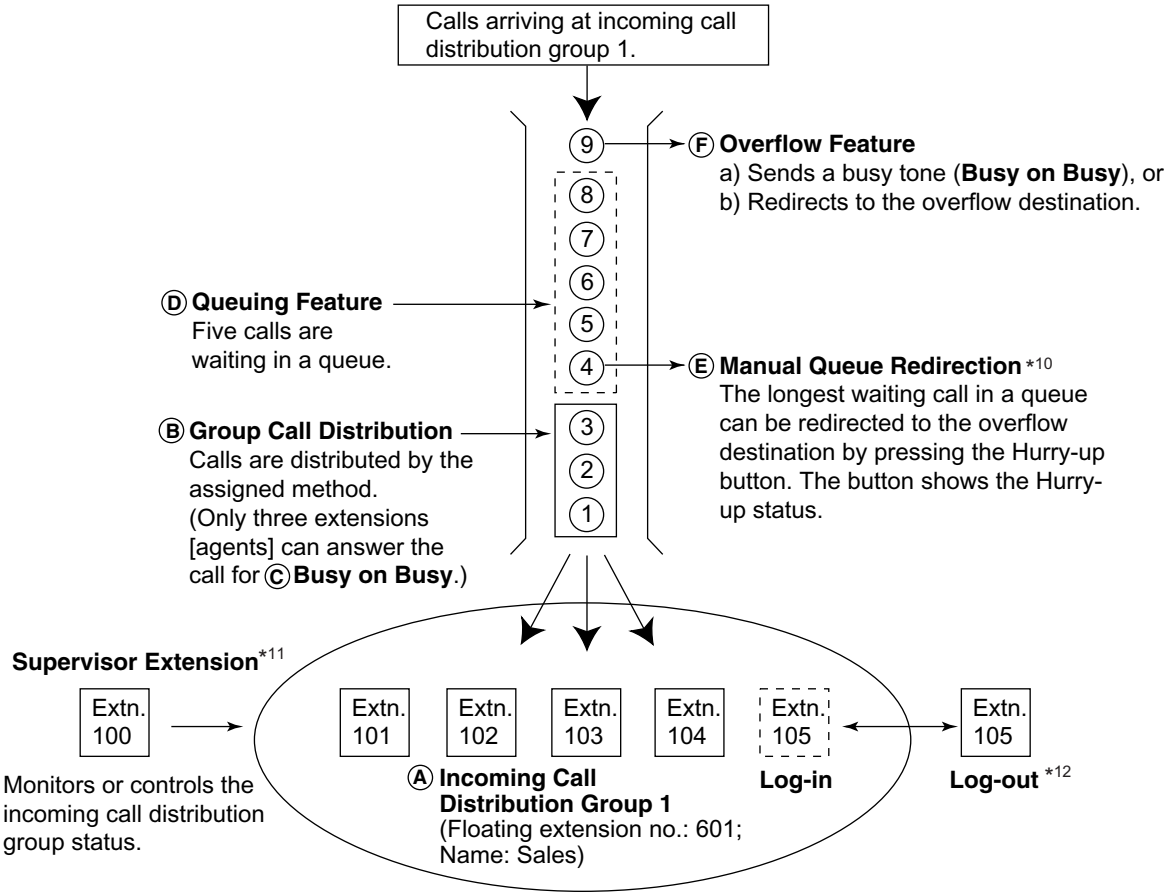

*10: → 1.2.2.4 Queuing Feature
*11: → 1.2.2.8 Supervisory Feature
*12: → 1.2.2.7 Log-in/Log-out

1. Group Call Distribution [→ 1.2.2.2 Group Call Distribution]
Incoming calls are distributed using one of the following methods:

Distribution Method	Description
Uniform Call Distribution (UCD)	Calls are distributed evenly to a different extension each time a call is received.
Priority Hunting	An idle extension is searched for in the specified order, always starting from the same location.
Ring	All extensions in the incoming call distribution group ring simultaneously.

2. Queuing Feature [→ 1.2.2.4 Queuing Feature]
If a preprogrammed numbers of extensions in an incoming call distribution group are busy, a preprogrammed number of additional calls can wait in a queue.
While calls are waiting in the queue, an outgoing message (OGM) or Music on Hold can be sent to the waiting callers.

3. **VIP Call** [→ 1.2.2.5 VIP Call]
   It is possible to assign a priority to incoming call distribution groups so that incoming calls can be received in priority order.

4. **Overflow Feature** [→ 1.2.2.6 Overflow Feature]
   A call is redirected to a preprogrammed destination when it cannot be answered or queued (**Intercept Routing—Overflow in an Incoming Call Distribution Group**). It is also possible to send a busy tone (**Busy on Busy**) or disconnect the line.

5. **Incoming Call Distribution Group Controlling Feature**

Feature		Description & Reference
Log-in/Log-out		Member extensions can join the group to handle calls (Log-in) or leave the group for a break (Log-out). They can leave the group temporarily when they are away from their desks, to prevent calls being sent to their extensions. → 1.2.2.7 Log-in/Log-out
Supervisory Feature	**Incoming Call Queue Monitor**	The supervisor extension can monitor various information about the incoming calls for each incoming call distribution group on his display. → 1.2.2.8 Supervisory Feature
	Log-in/Log-out Monitor and Remote Control	**Monitor:** The supervisor extension can monitor the log-in/log-out status of the group members. **Remote Control:** The supervisor extension can change the status of the members. → 1.2.2.8 Supervisory Feature

Conditions

- One extension can belong to multiple incoming call distribution groups.
- **ICD Group button**
  An Incoming Call Distribution (ICD) Group button can be assigned on a flexible button for each incoming call distribution group. It receives the incoming calls to the group.
  One extension can have more than one ICD Group button of the same or different incoming call distribution groups **(Multiple ICD Group)**. If all ICD Group buttons in the same incoming call distribution group are occupied, the next incoming call will be held in a queue or will overflow. If the ICD Group button is not assigned, incoming calls will arrive at the INTERCOM, CO or PDN button.
  The mode of ICD Group buttons can be selected through system programming, as follows:
  – Standard Mode (Group DN Button Mode)
    An extension can have an ICD Group button for an incoming call distribution group that the extension does not belong to through system programming. However, the ICD Group button will not receive calls to that group.
  – Enhanced Phantom Button Mode
    An extension can join an ICD Group just by creating a button for that group, even if the extension was not previously registered as a member. When the button is created, the extension will be

automatically registered in the lowest-numbered available member slot for the group. Calls to the group can be received at the extension with no further programming. If no member slots are available for that group, the button cannot be created and an alarm tone will be heard.
When creating an ICD Group button in this mode, the user can also specify the delayed ringing settings.
If an extension user deletes the last ICD Group button at his extension for a certain group, he will also be deregistered as a member from that group.

- **Group FWD**
  The FWD feature can be assigned on an incoming call distribution group basis.
- **COS for Incoming Call Distribution Groups**
  Each incoming call distribution group is assigned a COS number. Group FWD to an outside party can be enabled or disabled for each COS. The COS for incoming call distribution groups is also used for the Internal Call Block feature; when an extension user calls an incoming call distribution group, the PBX checks the COS of the calling extension against the COS of the incoming call distribution group (→ 1.1.2.2 Internal Call Block).

Programming Manual References

PC Programming Manual

2.9.10 [3-5-1] Incoming Call Distribution Group—Group Settings
→ Main
→ Overflow Queuing Busy
→ Overflow No Answer
→ Miscellaneous

2.9.12 [3-5-3] Incoming Call Distribution Group—Miscellaneous—Options—ICD Group Key Mode

2.9.13 [3-5-4] Incoming Call Distribution Group—Member

PT Programming Manual

[620] Incoming Call Distribution Group Member
[621] Incoming Call Distribution Group Delayed Ringing
[622] Incoming Call Distribution Group Floating Extension Number
[623] Incoming Call Distribution Group Name
[624] Incoming Call Distribution Group Distribution Method
[625] Destination for Overflow Time Expiration
[626] Overflow Time
[627] Destination When All Busy
[628] Queuing Call Capacity
[629] Queuing Hurry-up Level
[630] Queuing Time Table
[631] Sequences in Queuing Time Table
[632] Maximum Number of Agents

Feature Guide References

1.3.1.2 Call Forwarding (FWD)
1.20.2 Flexible Buttons
3.1 Capacity of System Resources

1.2.2.2 Group Call Distribution

Description

Incoming calls directed to an incoming call distribution group are distributed to the member extensions using the selected distribution method until a preprogrammed number of extensions (agents) are busy with calls. When incoming calls exceed the number of available extensions, calls enter a queue (→ 1.2.2.4 Queuing Feature).

1. Distribution Method

One of the three distribution methods below can be assigned to each incoming call distribution group.

Distribution Method	Description
Uniform Call Distribution (UCD)	Calls are distributed evenly to a different extension each time a call is received. Extensions are hunted in a circular way in the preprogrammed order for the group, starting at the extension after the extension that received the last call. 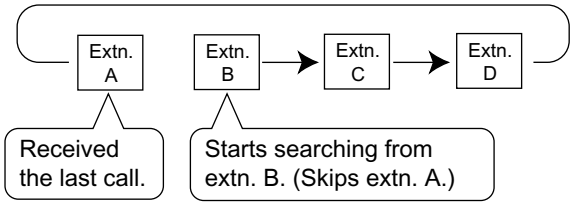
	Depending on system programming, calls can be directed to the longest idle extension. This is known as Automatic Call Distribution (ACD).
Priority Hunting	An idle extension is searched for using the preprogrammed order for the group. 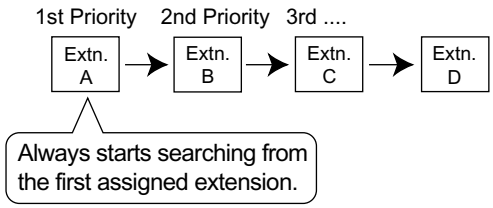
Ring	All extensions in the group ring simultaneously. **Delayed Ringing:** Delayed ringing or no ringing can be programmed for each extension in the group. The call can be answered by pressing the flashing button even if no ring or a delayed time is set. 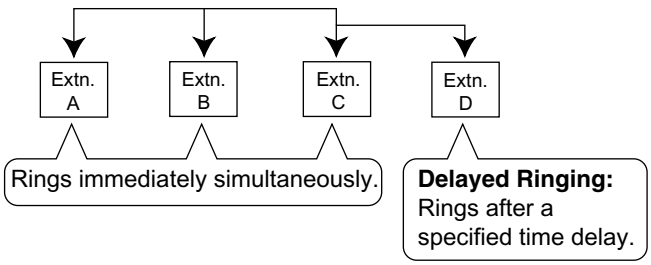

2. Call Waiting for Incoming Call Distribution Group (Group Call Waiting)

When there are no available extensions in an incoming call distribution group, the group members can receive the Call Waiting tone. To use this feature:

- Select the Group Call Waiting mode through system programming. This determines the distribution method for waiting calls.
- Member extensions must assign the Call Waiting mode individually, or they will not be notified. (→ 1.1.3.3 Call Waiting)

[How the Group Call Waiting Feature Activates]

Programming Conditions			Result	
Group Call Waiting Mode	**Group Call Distribution Method**		**Group Call Waiting Distribution Method**	**Capable Telephone**
Distribution	UCD	→	UCD	PT/PS with idle ICD Group button
	Priority Hunting	→	Priority Hunting	
	Ring	→	Not available*	Any telephone
All	UCD/Priority Hunting/ Ring	→	Ring	

*: Incoming calls enter the queue immediately. Member extensions do not receive the Call Waiting tone.

[Example]

• Group Call Waiting mode: All • Group call distribution method for idle extensions: UCD	→	All extensions hear the Call Waiting tone (Ring).

[ICD Group Button for Group Call Waiting]

The way that the Group Call Waiting feature works depends on the Group Call Waiting Distribution method as follows:

a) **Ring:** The Group Call Waiting feature activates for all busy member extensions (even when the extensions do not have ICD Group buttons) simultaneously for only one incoming call—additional calls will wait in a queue.

b) **UCD/Priority Hunting:** The Group Call Waiting feature activates on an idle ICD Group button located on busy member extensions in a certain order. (This order depends on the type: UCD or Priority Hunting.) Calls will arrive at idle buttons until all ICD Group buttons are occupied—additional calls will wait in a queue.

Note

In method b), if an extension has one or more ICD Group buttons for an incoming call distribution group and all the ICD Group buttons on the extension are occupied, the Group Call Waiting feature for the group will not work at the extension.

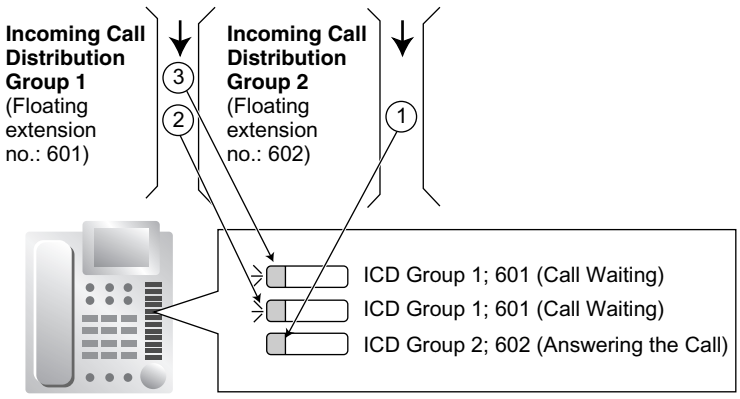

3. **No Reply Redirection (UCD or Priority Hunting Method)**
   If a call received at a member extension is not answered within a preprogrammed time period (No Answer time), the call will be redirected to the next member extension. If there is no idle group member, the call queues at the target extension until a group member becomes available.

Conditions

- **Automatic Call Distribution (ACD)**
  - When a KX-TDA6920, KX-TDA0920 or KX-TDA3920 SD Memory Card for Software Upgrade to Enhanced Version is installed in the PBX, and the distribution type is set to Uniform Call Distribution, it is possible to select whether incoming calls are distributed to idle extensions evenly in order (UCD), or to the extension that has been idle the longest (ACD).
  - ACD does not work for ISDN extensions or PS Ring Groups.
- **FWD/DND Extension**
  System programming for each incoming call distribution group is required to skip or ring extensions which have the FWD or DND feature set. If set to ring, the FWD/DND settings are ignored. (→ 1.3.1 Call Forwarding (FWD)/Do Not Disturb (DND))
- The Group Call Waiting feature cannot be used with the VIP Call feature (→ 1.2.2.5 VIP Call) and/or Wrap-up feature (→ 1.2.2.7 Log-in/Log-out). To use the VIP Call feature and/or Wrap-up feature, Call Waiting mode on each extension should be off.

Programming Manual References

PC Programming Manual

2.9.1 [3-1-1] Trunk Group—TRG Settings—Main—Line Hunting Order

2.9.10 [3-5-1] Incoming Call Distribution Group—Group Settings

→ Main—Distribution Method

→ Main—Call Waiting Distribution

→ Miscellaneous—Extension No Answer Redirection Time

→ Miscellaneous—Maximum No. of Busy Extensions

2.9.12 [3-5-3] Incoming Call Distribution Group—Miscellaneous

→ Options—Wrap-up Timer based on

→ Options—Longest Idle Distribution (Optional SD Card Required)

2.9.13 [3-5-4] Incoming Call Distribution Group—Member—Delayed Ring

2.10.1 [4-1-1] Wired Extension—Extension Settings—Option 7—Wrap-up Timer

2.10.10 [4-2-1] Portable Station—Extension Settings—Option 6—Wrap-up Timer

PT Programming Manual

[621] Incoming Call Distribution Group Delayed Ringing

[624] Incoming Call Distribution Group Distribution Method

[632] Maximum Number of Agents

1.2.2.3 Outside Destinations in Incoming Call Distribution Group

Description

Up to 4 outside parties or destinations at another PBX can be assigned as members of an Incoming Call Distribution (ICD) Group, using the following method: A virtual PS is registered as a member of the ICD Group. Then, the telephone number of the outside destination is specified as the FWD—All Calls destination. Calls to the ICD Group will also ring at the outside destination as if that destination were an extension within the PBX.
This is useful in situations such as the following:

- An extension user can have his PT and multiple cellular phones ring together for calls.
- An employee who is not in the office, but is still available to answer calls, can receive calls to an ICD Group.

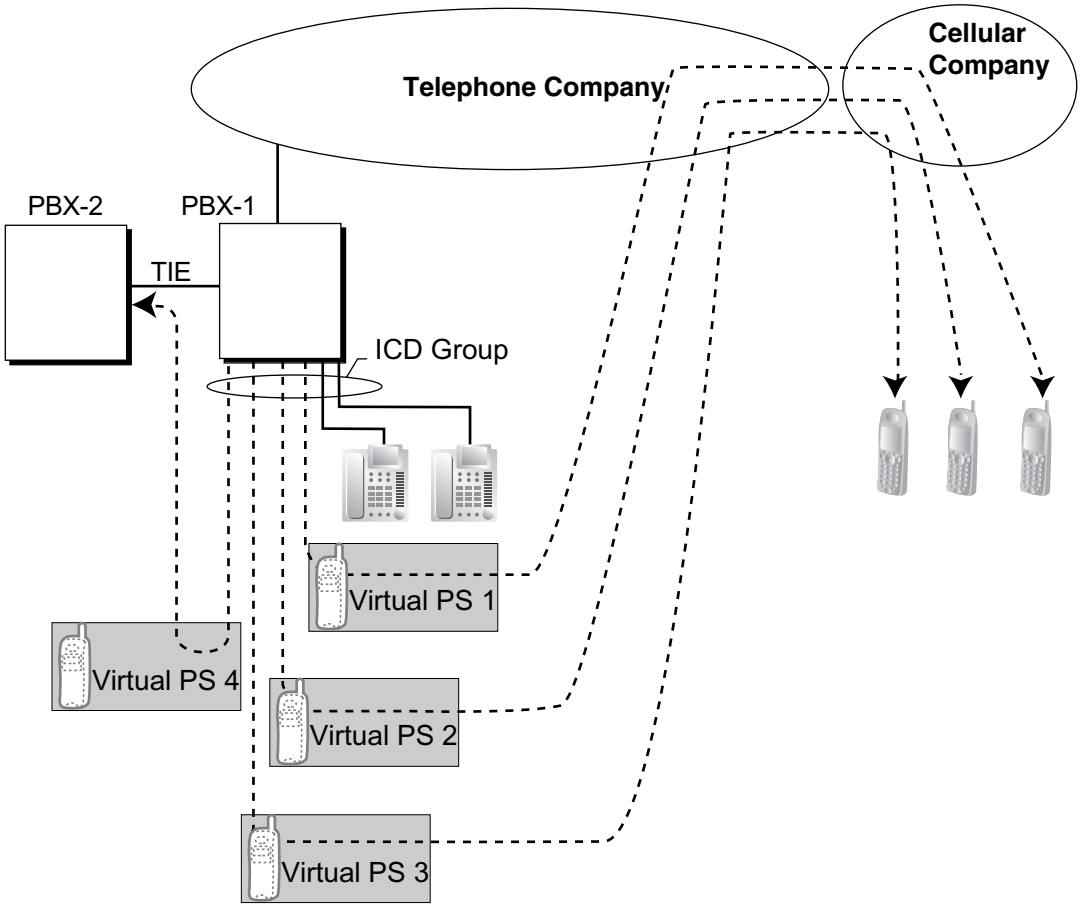

Cellular Phone XDP Parallel

The extension registered first in an ICD Group can programme the Forward settings for trunk calls to up to 4 virtual PSs through PT programming. Using this feature, an extension user can assign his cellular phone to ring with his PT, so that he can easily receive trunk calls even when not at his desk.

Conditions

- **Hardware Requirement**
  The KX-TDA6920, KX-TDA0920 or KX-TDA3920 SD Memory Card for Software Upgrade to Enhanced Version

- For this feature to be activated, the following conditions must be met:
  – A virtual PS is assigned as a member of the ICD Group. (→ 1.25.6 Virtual PS)
  – The forwarding type of the virtual PS is set to All Calls. (→ 1.3.1.2 Call Forwarding (FWD))
  – The forwarding destination is an outside party, including an extension at another PBX in the network.
  – FWD to trunk is allowed through COS programming for the virtual PSs.
  – The distribution method for the ICD Group is set to Ring. (→ 1.2.2.2 Group Call Distribution)
- Up to 4 virtual PSs can be assigned to a single ICD Group. If more than 4 are assigned, the 4 virtual PSs with the lowest member numbers are available.
- ELCOT/LCOT trunks without reverse circuit detection (→ 1.5.4.5 Reverse Circuit) and channels of a T1 trunk set to LCOT type do not support this feature.
- Calls to an ICD Group will ring at a virtual PS even if all of the other extensions assigned to the group are busy.
- If all members of an ICD Group are virtual PSs, and trunk lines are available but the called parties are all busy, neither the queuing or overflow features will operate. Therefore, it is recommended that at least one PT or SLT is also assigned to an ICD Group.
- To log in to or out of a group, a virtual PS user can access the PBX through DISA, enter the Walking COS feature number (if required), and access log-in/log-out settings.
- Delayed ringing can be assigned for virtual PSs in the same way as for other extensions.
- The wrap-up time feature is not available for virtual PSs.
- When forwarding calls to a public trunk, system programming selects whether the CLIP number of the calling party or of the virtual PS is sent to the forward destination.
  When calling using a private network, the CLIP number of the calling party will always be sent.

Programming Manual References

PC Programming Manual

2.8.17 [2-9] System Options—Option 4—Send CLIP of CO Caller to ISDN—when ICD Group with Cellular Phone

PT Programming Manual

None

Feature Guide References

1.25.6 Virtual PS

1.30.6 Network ICD Group

1.2.2.4 Queuing Feature

Description

When a preprogrammed number of extensions in an incoming call distribution group are busy, additional incoming calls can wait in a queue. The number of calls which can wait in the queue is programmable. While calls are waiting in the queue, the calls are handled by the Queuing Time Table, which can be assigned for each time mode (day/lunch/break/night) (→ 2.2.4 Time Service). This PBX supports a specified number of Queuing Time Tables which each have a specified number of sequences (specific commands which are performed when a caller enters a queue). The following commands can be assigned to each sequence when making a Queuing Time Table:

[Command Table]

Command	Description	Condition
OGM xx	An outgoing message is sent to the caller. "xx" applies to the OGM number.	After the OGM, Music on Hold will be sent and the next event in the sequence will be activated.
b × 5 s	Puts the caller in the waiting queue for b (01-16) × 5 seconds.	If an OGM has not been sent to the caller, the caller hears a ringback tone. If an OGM has been sent to the caller, the caller hears Music on Hold.
Sequence c	Redirects to sequence c. "c" applies to the sequence number.	None
Overflow	Redirects to the overflow destination.	None
Disconnect	Disconnects the line.	None
None (No command)	Redirects to the next sequence.	If assigned as sequence 01, the Queuing Time Table will not be activated.

[Programming Example of Queuing Time Table]

Queuing Time Table No.	Sequence*1				
	Sequence 01	**Sequence 02**	**Sequence 03**	**Sequence 04**	**...**
01	OGM 01	6 × 5 s	OGM 03	Overflow	
02*2	OGM 02	6 × 5 s	OGM 04	None	
03					
:	:	:	:	:	:

*1: → 2.9.11 [3-5-2] Incoming Call Distribution Group—Queuing Time Table—Queuing Sequence—Sequence 01–16

→ [631] Sequences in Queuing Time Table

*2: If a call has not reached a destination by the time the final sequence is completed, the call will be disconnected.

Explanation for Queuing Time Table 01:

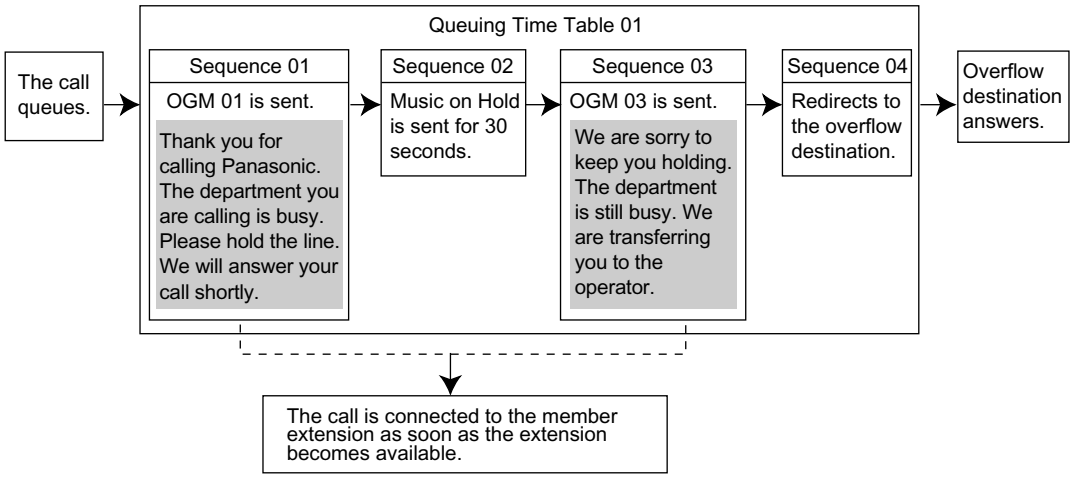

Conditions

- **If the call is transferred to the incoming call distribution group and is handled by the Queuing Time Table:**
  Transfer Recall will not occur even if the Transfer Recall time expires.
- **Manual Queue Redirection**
  It is possible to redirect the longest waiting call in a queue to the overflow destination by pressing the Hurry-up button. (If the call is already ringing at an extension, it will not be redirected.)
  This feature is also known as Hurry-up Transfer.
- **Hurry-up Button**
  A flexible button can be customised as the Hurry-up button. The number of calls queuing before Manual Queue Redirection may be performed is programmable. The button shows the current status as follows:

Light Pattern	Calls in the Waiting Queue
Off	No queued call
Red on	At or under the assigned number for Hurry-up
Rapid red flashing	Over the assigned number for Hurry-up

Programming Manual References

PC Programming Manual

2.8.8 [2-6-1] Numbering Plan—Main—Features—Incoming Call Queue Monitor

2.8.17 [2-9] System Options—Option 4—Transfer—Transfer to Busy Extension without BSS Operation

2.9.10 [3-5-1] Incoming Call Distribution Group—Group Settings

→ Overflow Queuing Busy

→ Overflow No Answer

→ Queuing Time Table

→ Miscellaneous—Extension No Answer Redirection Time

→ Miscellaneous—Maximum No. of Busy Extensions

2.9.16 [3-7-1] VM(DPT) Group—System Settings—Call Waiting on VM Group

2.9.19 [3-8-1] VM(DTMF) Group—System Settings—Others—Call Waiting on VM Group

2.10.5 [4-1-4] Wired Extension—Flexible Button

→ Type
→ Ext No. / Floating Ext. No. (for Hurry-up)

2.10.13 [4-2-3] Portable Station—Flexible Button
→ Type
→ Ext No. / Floating Ext. No. (for Hurry-up)

2.10.17 [4-3] DSS Console—Flexible Button
→ Type
→ Ext. No. / Floating Ext No. (for Hurry-up)

PT Programming Manual

[628] Queuing Call Capacity
[629] Queuing Hurry-up Level
[630] Queuing Time Table
[631] Sequences in Queuing Time Table
[632] Maximum Number of Agents

Feature Guide References

1.2.2.6 Overflow Feature
1.20.2 Flexible Buttons
3.1 Capacity of System Resources

User Manual References

1.9.3 Forwarding a Waiting Call (Manual Queue Redirection)

1.2.2.5 VIP Call

Description

It is possible to assign a priority to incoming call distribution groups. If an extension belongs to multiple groups and the extension becomes idle, queuing calls in the groups will be distributed to the extension in priority order.
Each incoming call distribution group can enable or disable the VIP Call mode. When multiple groups enable the VIP Call mode, the incoming call distribution group with the lowest numbered group has the highest priority. When multiple groups disable the VIP Call mode, queuing calls are distributed to extensions uniformly.

[Example]
In the call centre, incoming call distribution groups 1 and 3 enable the VIP Call mode, while incoming call distribution groups 2 and 4 disable the VIP Call mode.

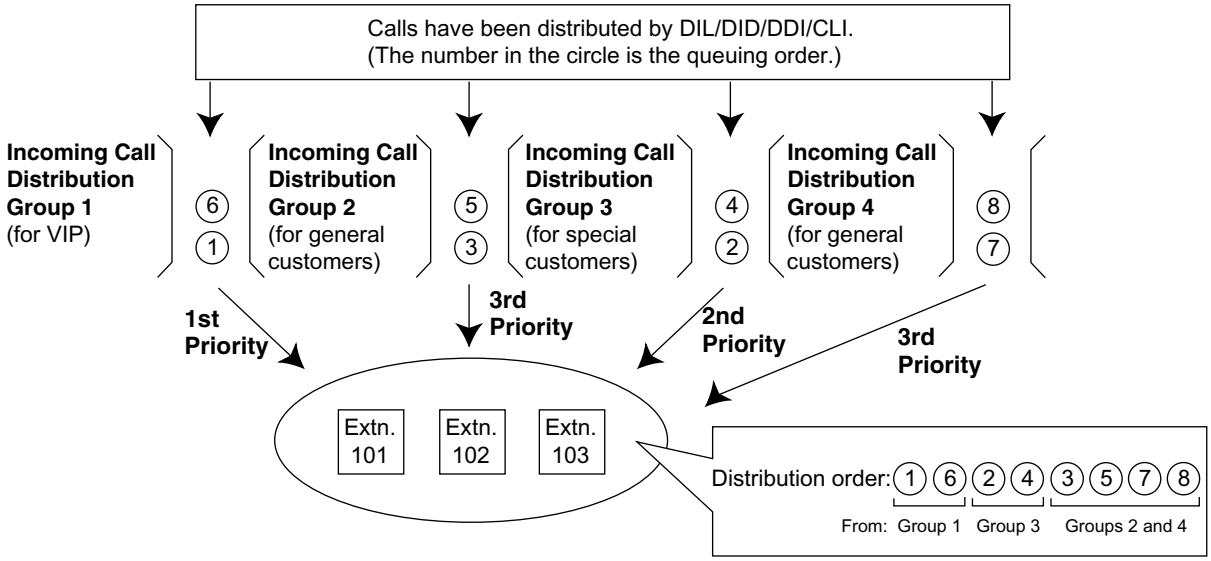

Programming Manual References

PC Programming Manual

2.9.10 [3-5-1] Incoming Call Distribution Group—Group Settings—Miscellaneous—VIP Call Mode

PT Programming Manual

None

1.2.2.6 Overflow Feature

Description

When waiting calls exceed the waiting queue capacity, they may be redirected to a preprogrammed destination or a busy tone may be sent to the callers by the following features:

1) Intercept Routing—Overflow in an Incoming Call Distribution Group

2) Busy on Busy

1. Intercept Routing—Overflow in an Incoming Call Distribution Group

Intercept Routing—Overflow in an Incoming Call Distribution Group works in one of following conditions:

a) There is no space in the waiting queue.

b) The Queuing Time Table is not assigned and there are no extensions logged in.

c) An Overflow command is assigned to the Queuing Time Table.

d) The Overflow time expires.

e) Manual Queue Redirection is performed.

[Available Destination]
The overflow destinations can be assigned for each incoming call distribution group and each time mode (day/lunch/break/night) (→2.2.4 Time Service). The destination can be assigned as follows, depending on the above conditions.

- For a) and b):
  → 2.9.10 [3-5-1] Incoming Call Distribution Group—Group Settings—Overflow Queuing Busy—Queuing Busy—Destination-Day, Lunch, Break, Night
  → [627] Destination When All Busy
- For c), d), and e):
  → 2.9.10 [3-5-1] Incoming Call Distribution Group—Group Settings—Overflow No Answer—Time out & Manual Queue Redirection—Destination-Day, Lunch, Break, Night
  → [625] Destination for Overflow Time Expiration

Destination	Availability
Wired Extension (PT/SLT/ISDN Extension/T1-OPX)	✔
PS	✔
Incoming Call Distribution Group	✔
PS Ring Group	✔
Floating Extension no. for SVM	✔
VM Group (DTMF/DPT)	✔
External Pager (TAFAS)	✔
DISA	✔
Analogue/ISDN Remote Maintenance	✔
Idle Line Access no. + Phone no.	✔

Destination	Availability
Trunk Group Access no. + Trunk Group no. + Phone no.	✔
Other PBX Extension (TIE with no PBX Code)	✔
Other PBX Extension (TIE with PBX Code)	✔

2. Busy on Busy

The Busy on Busy feature works when the destination for the Intercept Routing—Overflow in an Incoming Call Distribution Group feature is not assigned in one of the following conditions:

a) There is no space in the Waiting queue.

b) The Queuing Time Table is not assigned and there are no extensions logged-in.

[Example of a)]
There are five assistants in a shop. When the answering agent number is "2", and the queuing call number is "0":
If two of the assistants are talking on the phone, the next caller will hear a busy tone to prevent the caller from thinking that there is no one in the shop or that the shop is closed.

Conditions

[Intercept Routing—Overflow in an Incoming Call Distribution Group]

- **If the Overflow time expires, and the overflow destination is unavailable:**

a) If the trunk call arrives through the ELCOT, LCOT or T1 (LCOT/GCOT) card:
(1) If the call was once in a queue and an outgoing message (OGM) was sent to it, or the call reached an incoming call distribution group by using the DISA feature (→ 1.17.6 Direct Inward System Access (DISA)): The line is disconnected.
(2) In all other cases: Redirection is ignored and the Overflow timer activates again.

b) If the call arrives through another card: Redirection is ignored and the Overflow timer activates again.

[Busy on Busy]

- If a trunk call arrives through the ELCOT, LCOT or T1 (LCOT/GCOT) card, a busy tone will not be sent to the caller.

Programming Manual References

PC Programming Manual

2.9.10 [3-5-1] Incoming Call Distribution Group—Group Settings
→ Overflow Queuing Busy
→ Overflow No Answer
2.9.11 [3-5-2] Incoming Call Distribution Group—Queuing Time Table

PT Programming Manual

[625] Destination for Overflow Time Expiration
[626] Overflow Time
[627] Destination When All Busy
[628] Queuing Call Capacity
[632] Maximum Number of Agents

Feature Guide References

1.2.2.4 Queuing Feature

1.2.2.7 Log-in/Log-out

Description

Members of an incoming call distribution group can join (Log-in) or leave (Log-out) the group manually. They can leave the group temporarily when they are away from their desks, to prevent calls being sent to their extensions. They can return to the group when they are ready to answer calls.

Wrap-up:
While logged in, a member extension can have a preprogrammed time period automatically for refusing calls after completing the previous call (Wrap-up time). While the Wrap-up timer is active, calls to all incoming call distribution groups to which the extension belongs will skip the extension so that the extension user can perform necessary tasks such as reporting on the previous call.
Wrap-up mode can also be activated manually (Not Ready) by pressing the Wrap-up button.

[Log-in/Log-out and Wrap-up Status Example]

<When the incoming call distribution group is in Priority Hunting distribution method>

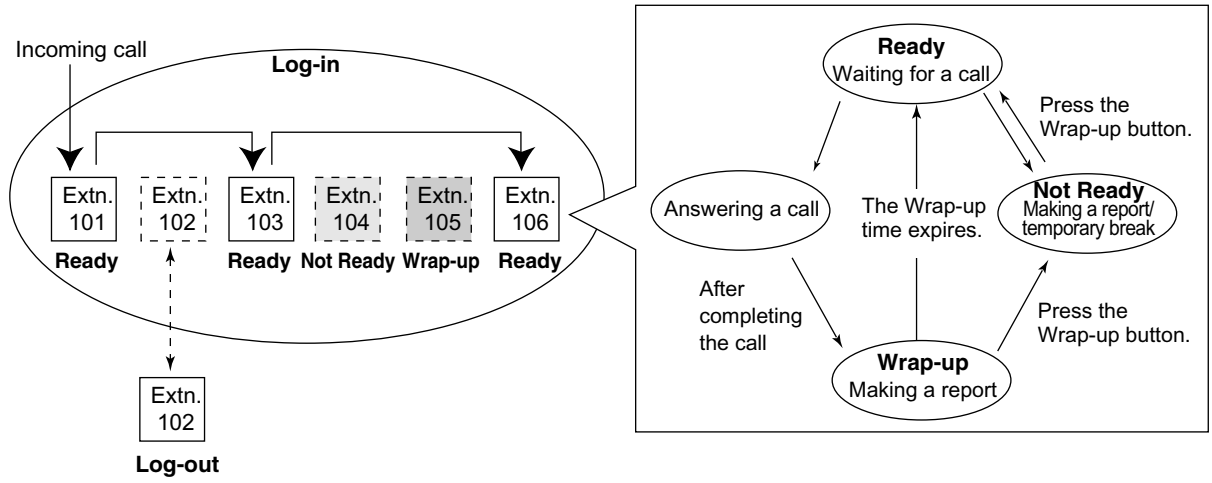

Conditions

- It is programmable whether the last remaining logged-in extension can log out.
- **Log-in/Log-out Button**
  A flexible button can be customised as the Log-in/Log-out button with the following parameters:

Parameter	Usage	Light Pattern	
		Red on	Off
No parameter	Used with an ICD Group button, or with the floating extension number of an incoming call distribution group, or with ✳ (All).	—	—
Floating extension number of a specified incoming call distribution group	Used to log in to or out of the specified incoming call distribution group.	Log-out Status	Log-in Status

Parameter	Usage	Light Pattern	
		Red on	Off
✳ (All)	Used to log in to or out of all incoming call distribution groups to which the extension user belongs.	After Log-out Operation	After Log-in Operation

- If an ICD Group button is assigned, it also shows the log-in/log-out status of the corresponding group. The light pattern is the same as the Log-in/Log-out button that includes the group number.
- **Wrap-up Timer**
  - Two wrap-up timers can be programmed, an ICD Group member wrap-up timer and an extension wrap-up timer. System programming selects which timer is used. When the ICD Group member wrap-up timer is selected, the timer is only activated after calls to the extension through an ICD Group. When the extension wrap-up timer is selected, the timer is activated after all calls to or from the extension, including a retrieved call on hold.
  - Only calls from ICD Groups cannot be received during the wrap-up time. Other calls are received as normal.
  - The wrap-up timer does not work for ISDN extensions or PS Ring Groups.
- **Wrap-up Button**
  A flexible button can be customised as the Wrap-up button. It shows the current status as follows:

Light pattern	Status
Slow red flashing	Wrap-up
Red on	Not Ready
Off	Ready (Wrap-up mode cancel)

- When a PS in Wireless XDP Parallel Mode completes a call, neither the PS nor its wired telephone can have Wrap-up time. (→ 1.25.5 Wireless XDP Parallel Mode)
- **Automatic Log-out**
  A member extension may be logged out automatically, if the Unanswered time expires a preprogrammed number of times consecutively. The number of consecutive unanswered calls can be assigned for each incoming call distribution group. If the extension is a member of more than one incoming call distribution group, the unanswered number is counted across all corresponding incoming call distribution groups. It is possible to return to log-in mode manually.
  The Automatic Log-out feature does not work for extensions in an incoming call distribution group using the Ring distribution method (→ 1.2.2.2 Group Call Distribution).
- **Log-in/Log-out Monitor**
  The supervisor extension can monitor and control the log-in/log-out status of the incoming call distribution group members. (→ 1.2.2.8 Supervisory Feature)
- **Log-in/Log-out Information on SMDR**
  Log-in/Log-out information can be printed out on SMDR. (→ 1.26.1 Station Message Detail Recording (SMDR))

Programming Manual References

PC Programming Manual

2.8.8 [2-6-1] Numbering Plan—Main—Features

→ Log-in / Log-out

→ Not Ready (Manual Wrap-up) Mode On / Off

2.9.10 [3-5-1] Incoming Call Distribution Group—Group Settings—Miscellaneous
→ No. of Unanswered Calls for Automatic Log-out
→ Last Extension Log-out
2.9.12 [3-5-3] Incoming Call Distribution Group—Miscellaneous—Options—Wrap-up Timer based on
2.9.13 [3-5-4] Incoming Call Distribution Group—Member—Wrap-up Timer
2.10.1 [4-1-1] Wired Extension—Extension Settings—Option 7—Wrap-up Timer
2.10.5 [4-1-4] Wired Extension—Flexible Button
→ Type
→ Parameter Selection (for Log-in/Log-out)
→ Ext No. / Floating Ext. No. (for Log-in/Log-out)
2.10.10 [4-2-1] Portable Station—Extension Settings—Option 6—Wrap-up Timer
2.10.13 [4-2-3] Portable Station—Flexible Button
→ Type
→ Parameter Selection (for Log-in/Log-out)
→ Ext No. / Floating Ext. No. (for Log-in/Log-out)
2.10.17 [4-3] DSS Console—Flexible Button
→ Type
→ Parameter Selection (for Log-in/Log-out)
→ Ext. No. / Floating Ext No. (for Log-in/Log-out)
2.17.1 [11-1] Main—SMDR—Print Information—Log-in / Log-out

PT Programming Manual

None

Feature Guide References

1.20.2 Flexible Buttons

User Manual References

1.9.1 Leaving an Incoming Call Distribution Group (Log-in/Log-out, Wrap-up)

1.2.2.8 Supervisory Feature

Description

An extension preprogrammed as a supervisor (supervisor extension) can monitor and control each member's status within the incoming call distribution group using a 6-line display PT.

Feature	Description
Incoming Call Queue Monitor	The supervisor extension can monitor the status of an incoming call distribution group with the display.
Log-in/Log-out Monitor and Remote Control	**Monitor:** The supervisor extension can monitor the log-in/log-out status of the incoming call distribution group members through the corresponding DSS button light. **Remote Control:** The supervisor extension can change the status of the members by pressing the corresponding DSS button.

[Example]

<Incoming Call Queue Monitor Display>

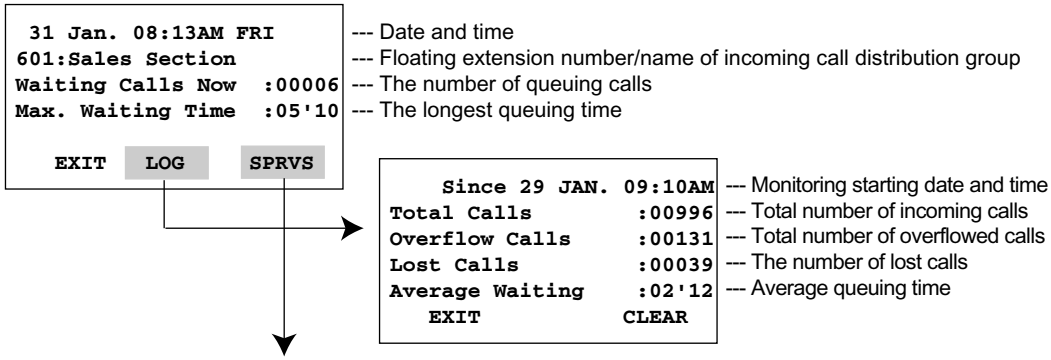

<Log-in/Log-out Monitor/Remote Control Mode with DSS Button light>

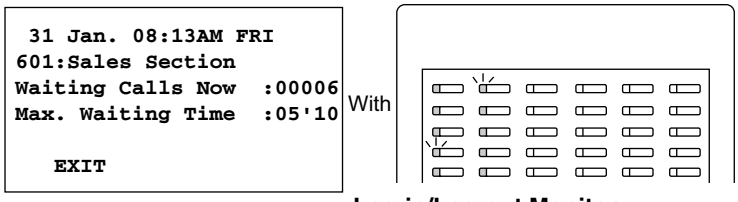

Log-in/Log-out Monitor
DSS buttons of the incoming call distribution group members show their status.

Log-in/Log-out Remote Control
Pressing the button changes the status as follows:

Light pattern	Status
Green on	Log-in (Ready)
Slow Green Flashing	Log-in (Not Ready)
Red on	Log-out
Off	Extension in another incoming call distribution group

Status	Light pattern
Log-out	Red on
Log-in (Ready)	Green on

Conditions

- **Available Extension as a Supervisor Extension**
  - **a)** One supervisor extension can be assigned for each incoming call distribution group, but it need not belong to the group.
  - **b)** One extension can be the supervisor extension of more than one incoming call distribution group.
- **Available Paired DSS Console**
  This feature is available for the KX-T7640, KX-T7440, and KX-T7441.
- **Accumulation Value Clear**
  Accumulation value data (total incoming calls, total overflowed calls, lost calls, average queuing time) can be cleared manually. The date and time of clearing is saved and is shown on the display (monitoring starting date and time). When the value exceeds 99999 before clearing, "*****" will be shown.
- **If a call to an incoming call distribution group is overflowed:**
  If the display is in idle status, it will change to monitor mode for the corresponding incoming call distribution group automatically.
  If the display is monitoring another incoming call distribution group, it will not change.
- **Other Features while in Monitor Mode**
  The supervisor can use other features on the extension (making calls, pressing the MESSAGE button, etc.) even while in monitor mode. When each operation is finished, his telephone returns to the queue monitor display.

Programming Manual References

PC Programming Manual

2.8.8 [2-6-1] Numbering Plan—Main—Features—Incoming Call Queue Monitor

2.9.10 [3-5-1] Incoming Call Distribution Group—Group Settings—Miscellaneous—Supervisor Extension Number

PT Programming Manual

None

User Manual References

1.9.2 Monitoring and Controlling the Call Status of an Incoming Call Distribution Group (Incoming Call Distribution Group Monitor)

1.3 Call Forwarding (FWD)/Do Not Disturb (DND) Features

1.3.1 Call Forwarding (FWD)/Do Not Disturb (DND)

1.3.1.1 Call Forwarding (FWD)/Do Not Disturb (DND)—SUMMARY

Description

When an extension user cannot answer calls (e.g., he is busy, or not at his desk), it is possible to forward or refuse calls using the following features:

1) Call Forwarding (FWD)

2) Do Not Disturb (DND)

1. **FWD**
   Extensions and incoming call distribution groups can forward their incoming calls to preset destinations. (→ 1.3.1.2 Call Forwarding (FWD))

2. **DND**
   Callers to an extension will hear a tone to inform them that the extension user is not available. (→ 1.3.1.3 Do Not Disturb (DND))

3. **FWD/DND Button, Group FWD Button**
   The FWD/DND fixed button, or a customised flexible button, can display the FWD/DND setting status of the extension. (→ 1.3.1.4 FWD/DND Button, Group FWD Button)

Conditions

- FWD and DND are set for intercom calls (including doorphone calls), and trunk calls (including a call from an extension that placed a trunk call on a consultation hold) separately.

1.3.1.2 Call Forwarding (FWD)

Description

Extensions and incoming call distribution groups can forward their calls to preset destinations. There are several different types of forwarding, and the circumstances under which the calls are forwarded for each type differ as follows:

Type	Circumstance
All Calls	Any time **Follow Me:** When an extension user fails to set this feature before leaving the desk, this feature can be set from the destination extension.
Busy	When the extension user's line is busy.
No Answer	When the extension user does not answer within a preprogrammed time.
Busy/No Answer	When the extension user's line is busy or the user does not answer within a preprogrammed time.

Depending on the type of incoming intercom or trunk calls, it is possible to set a different destination for each.

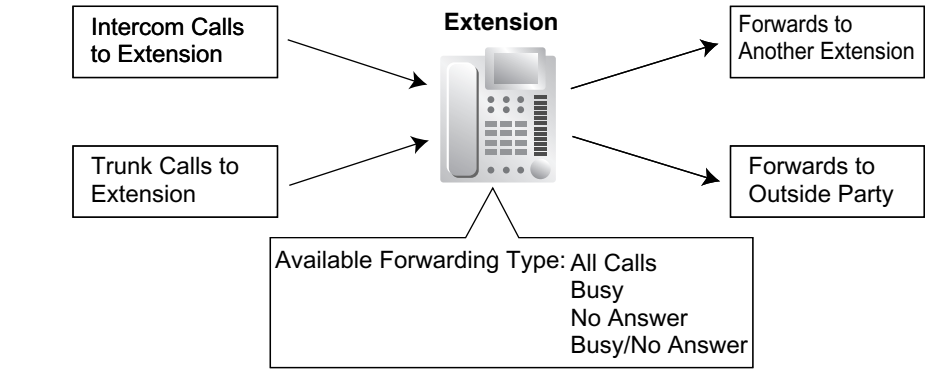

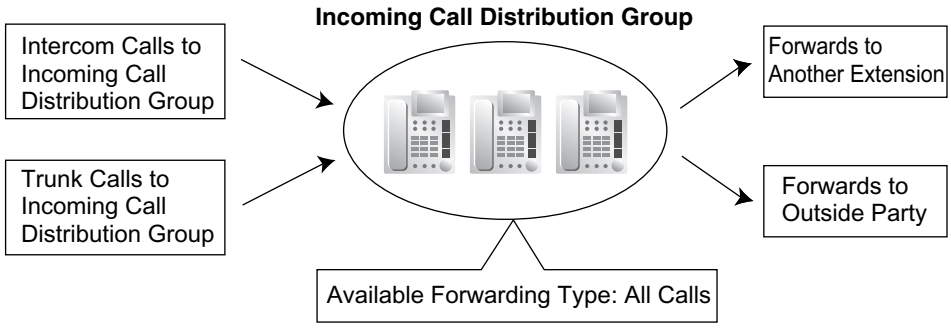

[Available Destinations]

Destination	Availability	Condition for Original Extension/ Incoming Call Distribution Group
Wired Extension (PT/SLT/ISDN Extension/T1-OPX)	✔	Only available when FWD to extension is allowed through COS programming.*
PS	✔	
Incoming Call Distribution Group	✔	
PS Ring Group	✔	–
Floating Extension no. for SVM	✔	–
VM Group (DTMF/DPT)	✔	–
External Pager (TAFAS)	✔	–
DISA	✔	Only available for incoming trunk calls. Incoming intercom and doorphone calls cannot be forwarded to a DISA floating extension number.
Analogue/ISDN Remote Maintenance	✔	–
Idle Line Access no. + Phone no.	✔	Only available when FWD to trunk is allowed through COS programming.
Trunk Group Access no. + Trunk Group no. + Phone no.	✔	
Other PBX Extension (TIE with no PBX Code)	✔	–
Other PBX Extension (TIE with PBX Code)	✔	Only available when FWD to trunk is allowed through COS programming.

*: If an extension user is not permitted by COS to call a certain extension (→ 1.1.2.2 Internal Call Block), the FWD feature will not function if that extension is set as the forwarding destination.

Conditions

[General]

- **FWD for Trunk Calls/Intercom Calls**
  The extension user can set the FWD feature for trunk calls, for intercom calls, or for both.
- **FWD from Incoming Call Distribution Group (Group FWD)**
  COS programming determines the incoming call distribution groups that can use this feature.
- **FWD to Trunk**
  COS programming determines the extensions or incoming call distribution groups that can forward calls externally.
  The original extension's TRS/Barring and ARS still apply to the forwarded call.
- **Trunk Call Duration**
  The duration of a trunk call can be restricted by a system timer. Trunk call duration is assigned separately for calls between an extension user and an outside party, and calls between two outside parties.
  If the timer expires, the line will be disconnected. (→ 1.11.8 Trunk Call Limitation)

- **Multiple FWD**
  Calls can be forwarded up to four times. The following forwarding features are counted as Multiple FWD:
  – FWD—Busy or Busy/No Answer (when the destination extension is busy), or All Calls
  – Idle Extension Hunting—Overflow
  – Intercept Routing—Busy/DND (when the destination extension is busy or in DND mode)
  – Incoming Call Distribution Group—Overflow

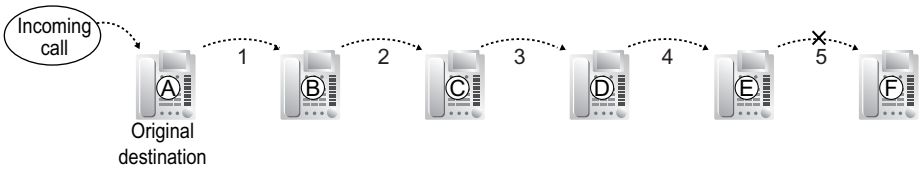

In the above illustration, forwarding stops at extension E. However, forwarding can go farther in the following cases:
– If a destination extension rings, and then the call is redirected to the forward destination by the FWD—No Answer or Busy/No Answer feature.
– If a destination extension rings, and then the call is redirected to the intercept destination by the Intercept Routing—No Answer feature.
– If a call waits in a queue of an incoming call distribution group, and then the call is redirected to the overflow destination by the Queuing Time Table. (→ 1.2.2.4 Queuing Feature)

In the above cases, the forwarding counter resets to zero, and the call can be forwarded up to four times again from the destination extension described above.

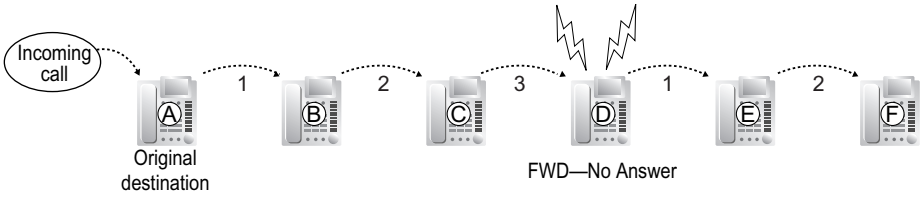

- **Boss & Secretary feature**
  It is possible to call the original extension from the destination extension regardless of the forward setting.

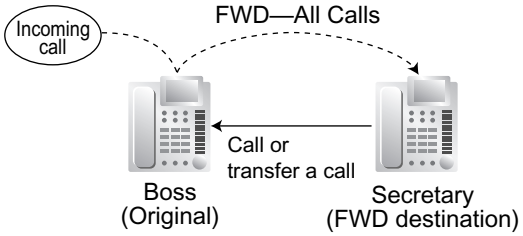

- **Message Waiting**
  While calls are forwarded, Message Waiting information is not forwarded. The Message button light turns on at the originally called extension. (→ 1.19.1 Message Waiting)
- **Idle Extension Hunting**
  Idle Extension Hunting applies to calls forwarded to a busy extension in an idle extension hunting group.

[All Calls and Busy]

- If the forward destination is not available to answer a call, this feature is cancelled and the original destination will ring for the following type of call:
  - Doorphone call
  - Trunk calls via the ELCOT, LCOT, or T1 (LCOT/GCOT) cards

[No Answer and Busy/No Answer]

- **No Answer Time**
  The number of rings before the call is forwarded is programmable for each extension.

[Follow Me]

- This feature is only available when the original extension has disabled the "**Deny Remote Operation by Other Extension**" setting on a COS basis.

Programming Manual References

PC Programming Manual

2.8.8 [2-6-1] Numbering Plan—Main—Features—FWD No Answer Timer Set

2.8.11 [2-7-1] Class of Service—COS Settings

→ TRS—Call Forward to CO

→ Extension Feature—Group Forward Set

→ Extension Feature—Remote Operation by Other Extension

2.9.1 [3-1-1] Trunk Group—TRG Settings—Main

→ CO-CO Duration Time

→ Extension-CO Duration Time

2.9.10 [3-5-1] Incoming Call Distribution Group—Group Settings—Group Log / Group FWD

2.10.3 [4-1-2] Wired Extension—FWD/DND

2.10.12 [4-2-2] Portable Station—FWD / DND

PT Programming Manual

[472] Extension-to-Trunk Call Duration

[473] Trunk-to-Trunk Call Duration

[504] Call Forwarding to Trunk

[605] Call Forwarding—No Answer Time

Feature Guide References

1.1.1.6 Intercept Routing

1.2.1 Idle Extension Hunting

1.2.2.6 Overflow Feature

2.2.1 Class of Service (COS)

User Manual References

1.6.1 Forwarding Calls

1.3.1.3 Do Not Disturb (DND)

Description

An extension user can make use of the DND feature. If this feature is set, calls will not arrive at the extension, but will arrive at another extension using the Idle Extension Hunting feature (→ 1.2.1 Idle Extension Hunting) or the Intercept Routing—Busy/DND feature (→ 1.1.1.6 Intercept Routing). When a destination cannot be found, the calling extension will hear the DND tone, while the calling outside party will hear a busy tone.

Conditions

- **DND for Trunk Calls/Intercom Calls**
  The DND feature can be set for trunk calls, for intercom calls, or for both of them by the extension user.
- **DSS button in DND Mode**
  The DSS button light will turn red if the assigned extension has set DND.
- **DND Override**
  An extension in DND mode can be called by other extension users who are allowed to override DND in their COS.
- **Paging DND**
  It is programmable whether the PBX pages extensions in DND mode through system programming. (→ 1.15.1 Paging)
- **Intercept Routing—Busy/DND**
  If a call arrives at an extension in DND mode, the call can be redirected to a preprogrammed destination by the Intercept Routing—Busy/DND feature.
- **Idle Extension Hunting**
  While searching for an idle extension within an idle extension hunting group, any extension that has DND set will be skipped. The call will go to the next extension in the group, not the Intercept Routing—Busy/DND destination.
- If (1) a trunk call via the ELCOT, LCOT, or T1 (LCOT/GCOT) card arrives at an extension in DND mode and (2) the Intercept Routing—Busy/DND destination is not available and (3) there is no available extension in the idle extension hunting group, then the original extension in DND mode will ring.
- Calls from a doorphone arrive at the extension even when the extension is in DND mode.

Programming Manual References

PC Programming Manual

2.8.4 [2-3] Timers & Counters—Dial / IRNA / Recall / Tone—Tone Length—Busy Tone / DND Tone

2.8.10 [2-6-3] Numbering Plan—B/NA DND Call Feature

→ BSS / OHCA / Whisper OHCA / DND Override

→ BSS / OHCA / Whisper OHCA / DND Override-2

2.8.11 [2-7-1] Class of Service—COS Settings—CO & SMDR—DND Override

2.9.1 [3-1-1] Trunk Group—TRG Settings—Intercept (not available for MPR Software File Version 3.1000 or later)—Intercept Destination—Day, Lunch, Break, Night (not available for MPR Software File Version 3.1000 or later)

2.10.3 [4-1-2] Wired Extension—FWD/DND

→ Call from CO—DND Status Availability

→ Call from Extension—DND Status Availability

PT Programming Manual

[507] DND Override

Feature Guide References

2.2.1 Class of Service (COS)

User Manual References

1.2.4 When the Dialled Line is Busy or There is No Answer
1.8.2 Refusing Incoming Calls (Do Not Disturb [DND])

1.3.1.4 FWD/DND Button, Group FWD Button

Description

The FWD/DND fixed button, or a customised flexible button, can display the FWD/DND setting status of the extension. Using this button, the FWD status and DND status of the extension can be temporarily set or cancelled without clearing FWD destination settings.

FWD/DND Button Types

Multiple types of FWD/DND buttons can be customised on an extension.

Type		Description
FWD/DND for Extension	FWD/DND—Internal	Works for incoming intercom calls
	FWD/DND—External	Works for incoming trunk calls
	FWD/DND—Both	Works for all incoming calls

[Button Status]
The FWD/DND button shows the current status as follows:

Light Pattern	Status (default)
Red on	FWD on
Slow red flashing	DND on
Off	FWD/DND off

The functions assigned to the "on" and "flashing" patterns can be changed through system programming.

Group FWD Button Types

The FWD feature for the incoming call distribution group can be customised on a flexible button. Multiple types of Group FWD buttons can be customised on an extension.

Type		Description
FWD for Incoming Call Distribution Group	Group FWD—Internal	Works for incoming intercom calls
	Group FWD—External	Works for incoming trunk calls
	Group FWD—Both	Works for all incoming calls

[Button Status]
The Group FWD button shows the current status as follows:

Light Pattern	Status (default)
Red on	FWD on
Off	FWD off

FWD/DND Setting by Fixed FWD/DND button

Pressing the fixed FWD/DND button in idle status allows the extension user to set the following items for FWD/DND:

- FWD/DND for trunk calls
  The FWD/DND status for trunk calls to that extension can be switched temporarily without clearing the FWD destination. During setting, the LED of the button shows the current trunk call FWD/DND status. The forwarding type and destination for trunk calls can also be set.
- FWD/DND for intercom calls
  The FWD/DND status for intercom calls to that extension can be switched temporarily without clearing the FWD destination. During setting, the LED of the button shows the current intercom call FWD/DND status. The forwarding type and destination for intercom calls can also be set.
- FWD—No Answer timer
  The length of time until unanswered calls are forwarded can be modified. This setting is applied to both intercom and trunk call forwarding.
- FWD for Virtual PS
  If the extension is the first registered extension in an Incoming Call Distribution Group, the extension user can set the FWD destination and forwarding status (on/off) for up to 4 virtual PSs preregistered to the group. (→ 1.25.6 Virtual PS)

These settings are only available when FWD/DND buttons are set through system programming to FWD/DND Setting mode.

Conditions

- When FWD/DND buttons are set to FWD/DND Cycle Switch mode, pressing the FWD/DND button cycles the FWD/DND setting.
  In this mode, when intercom calls are set to be handled differently from trunk calls (forwarding type, forward destination, DND on/off):
  a) in idle mode, the light patterns of the FWD/DND—Both button (including FWD/DND button [fixed button]) and the Group FWD—Both button will indicate the setting for either trunk calls or intercom calls, but not both.
  b) the FWD and DND icons on a PS display reflect the settings for trunk calls only.
  c) pressing the FWD/DND—Both button (including FWD/DND button [fixed button]) or the Group FWD—Both button will be ignored.
- When both the FWD and DND features are assigned simultaneously, pressing the button changes the settings as follows:

- A FWD/DND button customised on a flexible button is always in FWD/DND Cycle Switch mode, and the mode cannot be changed.

Programming Manual References

PC Programming Manual

2.8.8 [2-6-1] Numbering Plan—Main—Features
→ FWD/DND Set / Cancel: Call from CO & Extension
→ FWD/DND Set / Cancel: Call from CO
→ FWD/DND Set / Cancel: Call from Extension
→ Group FWD Set / Cancel: Call from CO & Extension
→ Group FWD Set / Cancel: Call from CO

→ Group FWD Set / Cancel: Call from Extension

2.8.17 [2-9] System Options—Option 1

→ PT Fwd / DND—Fwd LED

→ PT Fwd / DND—DND LED

→ PT Fwd / DND—Fwd/DND key mode when Idle

2.10.1 [4-1-1] Wired Extension—Extension Settings—FWD / DND Reference

2.10.5 [4-1-4] Wired Extension—Flexible Button

→ Type

→ Ext No. / Floating Ext. No. (for Group FWD (Both))

→ Ext No. / Floating Ext. No. (for Group FWD (External))

→ Ext No. / Floating Ext. No. (for Group FWD (Internal))

2.10.10 [4-2-1] Portable Station—Extension Settings—FWD / DND Reference

2.10.13 [4-2-3] Portable Station—Flexible Button

→ Type

→ Ext No. / Floating Ext. No. (for Group Fwd (Both))

→ Ext No. / Floating Ext. No. (for Group Fwd (External))

→ Ext No. / Floating Ext. No. (for Group Fwd (Internal))

2.10.17 [4-3] DSS Console—Flexible Button

→ Type

→ Ext. No. / Floating Ext No. (for Group Fwd (Both))

→ Ext. No. / Floating Ext No. (for Group Fwd (External))

→ Ext. No. / Floating Ext No. (for Group Fwd (Internal))

PT Programming Manual

None

Feature Guide References

1.20.1 Fixed Buttons

1.20.2 Flexible Buttons

User Manual References

3.1.2 Settings on the Programming Mode

1.4 Answering Features

1.4.1 Answering Features

1.4.1.1 Answering Features—SUMMARY

Description

An extension user can answer incoming calls by the following methods:

Destination	Feature	Description & Reference
At the own extension (PT only)	**Line Preference—Incoming**	A user can select the line seized when going off-hook. → 1.4.1.2 Line Preference—Incoming
	Direct One-touch Answering	A user can answer an incoming call simply by pressing the flashing button.
	Hands-free Answerback	A user can receive a call automatically and establish a hands-free conversation. → 1.4.1.4 Hands-free Answerback
At another extension	**Call Pickup—Directed/Group**	A user can pick up a specified extension's call or a call in a specified call pickup group. → 1.4.1.3 Call Pickup

1.4.1.2 Line Preference—Incoming

Description

A PT user can select the method used to answer incoming calls from the following three line preferences: Each of these line preferences can be assigned on each extension through personal programming (Preferred Line Assignment—Incoming).

Type	Description
No Line	Select a line by pressing the desired Line Access button to answer an incoming call after you go off-hook.
PDN	Answers a call arriving at a Primary Directory Number (PDN) button simply by going off-hook. This works even when multiple calls are received simultaneously. (→ 1.7.1 Primary Directory Number (PDN)/Secondary Directory Number (SDN) Extension)
Prime Line	Answer a call arriving at a Flexible CO or ICD Group button (on which the "Prime Line" is assigned) simply by going off-hook. This works even when multiple calls are received simultaneously.
Ringing Line (default)	Answer the longest ringing call at one's telephone simply by going off-hook when multiple calls arrive.

Conditions

[Prime Line]

- The priority of the incoming call is as follows:
  1) The call arriving at a button on which the "Prime Line" is assigned.
  2) The call arriving at the INTERCOM button.

Programming Manual References

PC Programming Manual

2.10.1 [4-1-1] Wired Extension—Extension Settings—Option 4—Incoming Preferred Line

2.10.10 [4-2-1] Portable Station—Extension Settings—Option 4—Incoming Preferred Line

PT Programming Manual

None

User Manual References

3.1.2 Settings on the Programming Mode

1.4.1.3 Call Pickup

Description

An extension user can answer a call ringing at any other extension.
The following types are available:

Type	Picking up Call Type
Directed	A specified extension's call.
Group	A call within a specified call pickup group.

Call Pickup Deny:
Preventing other extensions from picking up calls ringing at your extension is also possible.

Conditions

- **Call Pickup applies to:**
  Intercom, trunk, and doorphone calls
- **Internal Call Block**
  An extension that is restricted by COS from calling certain extensions (→ 1.1.2.2 Internal Call Block) also cannot pick up any calls ringing at those extensions.

[Directed Call Pickup]

- A user can also pick up a call to a specified extension by pressing the corresponding DSS button. This feature is only available when (1) the user's extension is allowed to use this feature through COS programming, (2) DSS buttons for extensions or incoming call distribution (ICD) groups have this feature enabled through system programming, and (3) the light pattern of DSS buttons for incoming calls to extensions or ICD groups is set to "**`On or Flash`**" through system programming.
  The light pattern of a DSS button for an incoming call to an extension or incoming call distribution group can be programmed through system programming. Call Pickup is available only when the DSS button is flashing red.

[Group Call Pickup]

- A specified number of call pickup groups can be created, each of which consist of extension user groups. One extension user group can belong to several call pickup groups. (→ 2.2.2 Group)

  [Example]

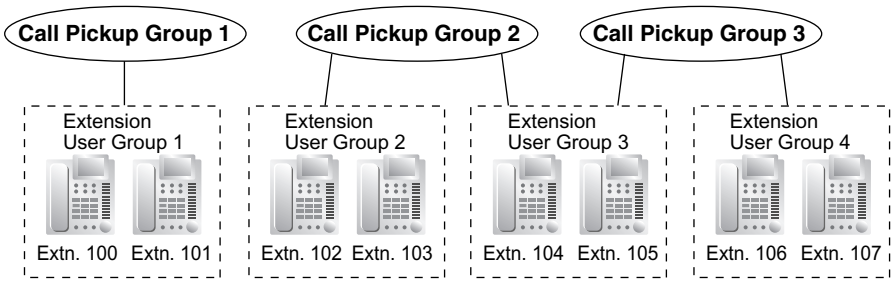

Programming Manual References

PC Programming Manual

2.8.8 [2-6-1] Numbering Plan—Main—Features

→ Group Call Pickup

→ Directed Call Pickup

→ Call Pickup Deny Set / Cancel

2.8.11 [2-7-1] Class of Service—COS Settings—CO & SMDR—Call Pickup by DSS

2.8.17 [2-9] System Options—Option 4

→ DSS Key—DSS Key mode for Incoming Call

→ DSS Key—Call Pick-up by DSS key for Direct Incoming Call

→ DSS Key—Call Pick-up by DSS key for ICD Group Call

2.9.5 [3-3] Call Pickup Group

2.10.1 [4-1-1] Wired Extension—Extension Settings—Option 3—Call Pickup Deny

2.10.10 [4-2-1] Portable Station—Extension Settings—Option 3—Call Pickup Deny

PT Programming Manual

[650] Extension User Groups of a Pickup Group

Feature Guide References

2.2.1 Class of Service (COS)

3.1 Capacity of System Resources

User Manual References

1.3.3 Answering a Call Ringing at Another Telephone (Call Pickup)

1.4.1.4 Hands-free Answerback

Description

A PT user with a speakerphone can talk to a caller without lifting the handset. If the user receives a call while in Hands-free Answerback mode, a hands-free conversation is established using one of the following methods:

Type	Answering Method
Intercom Call	Established immediately after a beep tone at the called extension and the caller hears a confirmation tone.
Trunk Call	Established after a specified number of rings, a called extension hears a beep tone.

Conditions

- **Hands-free Answerback applies to:**
  Intercom calls and trunk calls, including calls directed to an incoming call distribution group in UCD or Priority Hunting distribution method. (→ 1.2.2.2 Group Call Distribution)
- **Hands-free Answerback for Trunk Calls**
  System programming is required to use this feature.
- **Hands-free Answerback for Calls From an Extension That Placed a Trunk Call on Consultation Hold**
  Calls from an extension that placed a trunk call on Consultation Hold can be treated by this feature as either intercom calls or trunk calls, depending on system programming. If treated as intercom calls, the call will be established immediately.
  When transferring a call from an analogue trunk, users are strongly recommended to perform a screened transfer, so that the outside caller is not automatically connected to an extension using Hands-free Answerback when the extension user is absent.
- **Secret Monitor**
  The beep tone that the called party hears before answering can be eliminated through system programming.
- **Alternate Receiving/Calling Mode (Ring/Voice) Override**
  Hands-free Answerback overrides the Alternate Receiving mode preset on the telephone and the Alternate Calling mode from the caller.
- **Hands-free Answerback with Headset**
  The Hands-free Answerback feature can also be used with a headset.

Programming Manual References

PC Programming Manual

2.8.4 [2-3] Timers & Counters—Dial / IRNA / Recall / Tone—Tone Length—Reorder Tone for PT Hands-free

2.8.17 [2-9] System Options

→ Option 1—PT Operation—Automatic Answer for Call from CO after

→ Option 3—Confirmation Tone—Tone 2 : Paged / Automatic Answer

→ Option 4—Transfer—Automatic Answer for Transferred Call

2.10.1 [4-1-1] Wired Extension—Extension Settings—Option 5

→ Automatic Answer for CO Call

→ Forced Automatic Answer

PT Programming Manual

None

Feature Guide References

1.5.3 Intercom Call

User Manual References

1.3.2 Answering Hands-free (Hands-free Answerback)

1.5 Making Call Features

1.5.1 Predialling

Description

A display PT user can check and correct the entered number before it is dialled, while on-hook. The call will be initiated after going off-hook.

Conditions

- **Storing the Predialled Number in the Personal Speed Dialling**
  The predialled number can be stored in the Personal Speed Dialling by pressing the AUTO DIAL/ STORE button. (→ 1.6.1.5 Speed Dialling—Personal/System) In this case, the extension will enter into the personal programming mode automatically so that a name can be assigned for the stored number.

User Manual References

3.1.2 Settings on the Programming Mode

1.5.2 Automatic Extension Release

Description

After going off-hook, if an extension user fails to dial any digits within a preprogrammed time period, the user will hear a reorder tone. This operation applies to intercom calls only.

This feature is also known as Automatic Station Release.

Conditions

- A PT/PS user hears a reorder tone for a preprogrammed time period, and then the PT/PS returns to idle status automatically. However, an SLT user hears a reorder tone until he goes on-hook.
- **This feature works in one of the following cases:**
  When making an intercom call
  a) If the first digit is not dialled within a preprogrammed time period.
  b) After a digit is dialled, if subsequent digits are not dialled within a preprogrammed time period.

Programming Manual References

PC Programming Manual

2.8.4 [2-3] Timers & Counters—Dial / IRNA / Recall / Tone

→Dial—Extension First Digit

→Dial—Extension Inter-digit

→Tone Length—Reorder Tone for PT Handset

→Tone Length—Reorder Tone for PT Hands-free

PT Programming Manual

None

1.5.3 Intercom Call

Description

An extension user can call another extension user.

Conditions

- **Extension Number/Name Assignment**
  Extension numbers and names are assigned to all extensions. The assigned number and name are shown on display PTs during intercom calls.
- **DSS Button**
  It is possible to access another extension with one touch by pressing the corresponding Direct Station Selection (DSS) button. A flexible button can be customised as a DSS button.
- **Call Directory—Extension Dialling**
  A display PT user can make a call by selecting one of the stored names on the display.
- **Alternate Receiving—Ring/Voice**
  A PT user can select to receive intercom calls by ring tone or by voice, through personal programming (Alternate Receiving—Ring/Voice). If a user selects voice-calling, the calling party talks to the user immediately after a confirmation tone. Denying voice-calling can also be selected.
- **Alternate Calling—Ring/Voice**
  A caller can change the called party's preset call receiving method (ring tone or voice) temporarily. By doing so, ring-calling is switched to voice-calling, or vice versa, at the called party. The called party may deny voice-calling.
- **PDN/SDN**
  It is not possible to temporarily change the called party's preset call receiving method when making a call using a Primary Directory Number (PDN) button or Secondary Directory Number (SDN) button (→ 1.7.1 Primary Directory Number (PDN)/Secondary Directory Number (SDN) Extension).
- **Tone after Dialling**
  After dialling an extension number, a user will hear one of the following:

Type	Description
Ringback Tone	Indicates the called party is being called.
Confirmation Tone	Indicates the called party has set voice-calling.
Busy Tone	Indicates the called party is busy.
DND Tone	Indicates the called party has set DND.

Programming Manual References

PC Programming Manual

2.8.10 [2-6-3] Numbering Plan—B/NA DND Call Feature—Alternate Calling - Ring / Voice

2.10.1 [4-1-1] Wired Extension—Extension Settings

→ Main—Extension Number

→ Main—Extension Name

→ Option 4—Intercom Call by Voice

2.10.10 [4-2-1] Portable Station—Extension Settings—Main

→ Extension Number

→ Extension Name

PT Programming Manual

[003] Extension Number

[004] Extension Name

Feature Guide References

1.20.2 Flexible Buttons

User Manual References

1.2.1 Basic Calling

1.2.6 Alternating the Calling Method (Alternate Calling—Ring/Voice)

1.13.2 Using the Directories

3.1.2 Settings on the Programming Mode

1.5.4 Trunk Call Features

1.5.4.1 Trunk Call Features—SUMMARY

Description

An extension user can use the following features when making a trunk call:

Feature	Description & Reference
Emergency Call	A user can dial the preprogrammed emergency numbers regardless of the restrictions imposed on the extension. → 1.5.4.2 Emergency Call
Account Code Entry	A user can enter an account code to identify outgoing calls for accounting and billing purposes. → 1.5.4.3 Account Code Entry
Pulse to Tone Conversion	A user can temporarily switch from Pulse mode to DTMF mode to access special services. → 1.5.4.4 Dial Type Selection
Pause Insertion	A user can insert a preprogrammed Pause time into a dialling number by pressing the PAUSE button, or it is automatically inserted between the user-dialled code (e.g., Host PBX Access code or Special Carrier Access code) and the following digits. → 1.5.4.7 Pause Insertion → 1.5.4.8 Host PBX Access Code (Access Code to the Telephone Company from a Host PBX) → 1.5.4.9 Special Carrier Access Code

1.5.4.2 Emergency Call

Description

An extension user can dial the preprogrammed emergency numbers after seizing a trunk regardless of the restrictions imposed on the extension.

Conditions

- A specified number of emergency numbers can be stored (some may have default values).
- Emergency numbers may be called even when:
  - in Account Code—Forced mode (→ 1.5.4.3 Account Code Entry)
  - in any TRS/Barring levels (→ 1.9.1 Toll Restriction (TRS)/Call Barring (Barring))
  - after the preprogrammed call charge limit is reached (→ 1.9.2 Budget Management)
  - in Extension Dial Lock (→ 1.9.3 Extension Dial Lock)
- **CLIP Number Notification (KX-TDA100/KX-TDA200/KX-TDA600 only)**
  When dialling an emergency number, the preassigned CLIP number for the extension will be sent as a location identification number. (→ 1.21.1.2 Calling/Connected Line Identification Presentation (CLIP/COLP))
  The CLIP number assigned to the extension will be sent regardless of the settings such as CLIR or CLIP number assigned to an ISDN port to be used. This feature is only available when using a PRI (PRI23) line with E911-compatible services.

Programming Manual References

PC Programming Manual

2.13.4 [7-4] Emergency Dial

PT Programming Manual

[304] Emergency Number

Feature Guide References

3.1 Capacity of System Resources

1.5.4.3 Account Code Entry

Description

An account code is used to identify outgoing trunk calls for accounting and billing purposes. The account code is appended to the SMDR call record. If, for example, a firm uses an account code for each client, the firm can determine what calls were made for the client, and can submit a bill to the client according to the client's account code on the SMDR call record.
There are two methods of entering account codes as follows:
One of the methods is selected for each extension on a COS basis.

Mode	Description
Option	A user can enter an account code if needed at any time desired.
Forced	A user must always enter an account code before seizing a trunk.

Conditions

- An account code can be stored into Memory Dialling (e.g., One-touch Dialling).
- **Account Button**
  A flexible button can be customised as the Account button. The Account button is used in place of the feature number for entering an account code. This button is useful because it can be used at any time, while feature number entry is allowed only when hearing a dial tone before seizing a trunk.
- Extension users can enter an account code at any time during a call, including after the call has been disconnected and a reorder tone is heard. However, if an account code is entered after there is no longer a reorder tone, the call will not be stored in the SMDR record.
- If more than one account code is entered, the code entered last is printed out on SMDR.
- Even in Forced mode, emergency numbers can be dialled out without an account code. (→ 1.5.4.2 Emergency Call)
- PT users can also enter an account code for incoming trunk calls during a conversation.
- **Verification Code Entry**
  To identify who made a trunk call for accounting and billing purposes, a verification code is used. This code can be used at any extension. (→ 1.9.6 Verification Code Entry)

Programming Manual References

PC Programming Manual

2.8.8 [2-6-1] Numbering Plan—Main—Features—Account Code Entry

2.8.11 [2-7-1] Class of Service—COS Settings—CO & SMDR—Account Code Mode

PT Programming Manual

[508] Account Code Mode

Feature Guide References

1.20.2 Flexible Buttons

1.26.1 Station Message Detail Recording (SMDR)

2.2.1 Class of Service (COS)

User Manual References

1.2.1 Basic Calling

1.5.4.4 Dial Type Selection

Description

The dialling mode (rotary or tone) can be selected for each analogue trunk through system programming regardless of the originating extension (under contract with the telephone company).
There are the following modes:

Mode	Description
DTMF (Dual Tone Multi-Frequency)	The dialling signal from an extension is converted to tone dialling. DTMF signals are transmitted to the trunk.
Pulse Dial (Rotary)	The dialling signal from an extension is converted to rotary dialling. Rotary pulses are transmitted to the trunk.

Conditions

- **Pulse to Tone Conversion**
  It is possible for an extension user to temporarily switch from Pulse mode to DTMF mode so that the user can access special services such as computer-accessed long distance calling or voice mail services. To switch to DTMF mode, wait for a preprogrammed time period (Default: five seconds) after the trunk is connected, or press ✳. This feature works only on trunks set to Pulse mode. DTMF mode cannot be changed to Pulse mode.
- It is possible to select the pulse rate for a trunk port that has been set to Pulse mode. There are two pulse rates: Low (10 pps) and High (20 pps).
- It is possible to assign the minimum duration of the DTMF signal sent to a trunk port that has been set to DTMF mode.

Programming Manual References

PC Programming Manual

2.7.11 [1-1] Slot—LCO Port
→ Dialling Mode
→ DTMF Width
→ Pulse Speed

2.7.19 [1-1] Slot—T1 Port (KX-TDA100/KX-TDA200/KX-TDA600 only)
→ CO Dial Mode
→ DTMF Width
→ CO Pulse Speed

2.7.25 [1-1] Slot—E1 Port
→ CO Dial Mode
→ DTMF Width
→ CO Pulse Speed

2.7.28 [1-1] Slot—E&M Port (KX-TDA100/KX-TDA200/KX-TDA600 only)
→ Dialling Mode
→ DTMF Width
→ CO Pulse Speed

2.7.31 [1-1] Slot—DID Port

→ Dialling Mode
→ DTMF Width
→ CO Pulse Speed

PT Programming Manual

[410] LCOT Dialling Mode
[411] LCOT Pulse Rate
[412] LCOT DTMF Minimum Duration

1.5.4.5 Reverse Circuit

Description

A circuit in the PBX can detect the reverse signal from the telephone company when an extension user tries to make a trunk call. This detects the start (a called party goes off-hook) and end (the called party goes on-hook) of an outgoing trunk call. When a trunk call is received, the circuit can also detect the reverse signal after an outside caller goes on-hook.
If Reverse Circuit Detection is disabled, the total duration of the call is not accurately recognised by the PBX. The duration of a call can be verified on SMDR using this feature (→1.26.1 Station Message Detail Recording (SMDR)).
It is possible to select whether the PBX detects the reverse signal for outgoing trunk calls only, or for both outgoing and incoming trunk calls, or for no trunk calls (detection disabled) through system programming.

Conditions

- This feature is not available for the following ELCOT or LCOT cards:
  KX-TDA6181AL (ELCOT16)
  KX-TDA0181AL (LCOT16)
  KX-TDA0180AL (LCOT8)

Programming Manual References

PC Programming Manual

2.7.11 [1-1] Slot—LCO Port—Reverse Detection

PT Programming Manual

[415] LCOT Reverse Circuit

1.5.4.6 Trunk Busy Out

Description

The PBX can monitor the loop current sent through analogue trunks, preventing users from seizing trunks where a loop current is not detected. When loop currents are not detected, trunks are set to Busy Out status, and become unable to make or receive calls. A trunk in Busy Out status cannot be used for making calls as a TIE line, as part of a trunk group, or with the ARS feature, and cannot receive trunk calls. If a user tries to seize a trunk set to Busy Out status, the user will hear a reorder tone.
This is useful if some or all trunks are occasionally unavailable because of problems with the external telecommunications environment.

Conditions

- This feature is not available for the following LCOT cards:
  KX-TDA0181NE (LCOT 16)
  KX-TDA0180NE (LCOT 8)
  KX-TDA0183NE (LCOT 4)
  KX-TDA3180NE and KX-TDA3180AL (LCOT4)
  KX-TDA3183NE and KX-TDA3183AL (LCOT2)
- Loop current detection is performed on active trunks whenever the trunk is seized and/or at fixed intervals.
- When a trunk is in busy-out status, loop current detection is performed at fixed intervals, returning the trunk to in-service status once a loop current is detected. An extension assigned as the manager can manually change the trunk back to in-service status.
- Trunk status changes are recorded in the error log of the PBX.
- Busy Out status is maintained even when the PBX is reset.

Programming Manual References

PC Programming Manual

2.7.11 [1-1] Slot—LCO Port—Busy Out Status

2.8.8 [2-6-1] Numbering Plan—Main—Features—Busy Out Cancel

2.8.11 [2-7-1] Class of Service—COS Settings—Extension Feature—Manager

2.8.17 [2-9] System Options—Option 5—Busy Out—Busy Out for Analogue CO

PT Programming Manual

[511] Manager Assignment

Feature Guide References

2.2.6 Manager Features

User Manual References

2.1.6 Allowing Users to Seize an Unavailable Outside Line (Trunk Busy Out)

1.5.4.7 Pause Insertion

Description

Pressing a PAUSE button inserts a preprogrammed Pause time between digits of a user-dialled number before the number is dialled out, allowing certain numbers separated with a pause to be used to access certain features (e.g., access codes, seizing idles lines, etc.).
When a pause is needed, pauses must be inserted manually (pressing the PAUSE button) in all cases, except for the following access codes where a pause is automatically inserted between the user-dialled access code and the subsequent digits:

a) Host PBX Access code (→ 1.5.4.8 Host PBX Access Code (Access Code to the Telephone Company from a Host PBX))

b) Special Carrier Access code (→ 1.5.4.9 Special Carrier Access Code)

c) Second Dial Tone Waiting code

Conditions

- The Pause time is programmable for each trunk.
- Pauses can be stored in Memory Dialling.
- When a Second Dial Tone Waiting code is dialled after seizing a trunk, a preprogrammed number of pauses are inserted after the code.
- **ARS**
  A pause is not automatically inserted between the user-dialled access code and the subsequent digits when the ARS mode is enabled. (1.10.1 Automatic Route Selection (ARS))

Programming Manual References

PC Programming Manual

2.7.11 [1-1] Slot—LCO Port—Pause Time

2.7.19 [1-1] Slot—T1 Port (KX-TDA100/KX-TDA200/KX-TDA600 only)—Pause Time

2.7.25 [1-1] Slot—E1 Port—Pause Time

2.7.28 [1-1] Slot—E&M Port (KX-TDA100/KX-TDA200/KX-TDA600 only)—Pause Time

2.7.31 [1-1] Slot—DID Port—Pause Time

2.8.4 [2-3] Timers & Counters—Miscellaneous—During Conversation—Pause Signal Time

2.12.4 [6-4] Second Dial Tone

PT Programming Manual

[416] LCOT Pause Time

1.5.4.8 Host PBX Access Code (Access Code to the Telephone Company from a Host PBX)

Description

This PBX can be installed behind an existing PBX (host PBX) by connecting the extension ports of the host PBX to the trunk ports of this PBX (behind PBX). A Host PBX Access code is required for the behind PBX to access the telephone company (e.g., to make outside calls) through the host PBX. The Trunk access number of the host PBX should be stored as a Host PBX Access code on a trunk group of the behind PBX. A preprogrammed Pause time will be automatically inserted between the user dialled Host PBX Access code and the subsequent digits (1.5.4.7 Pause Insertion).

[Example]

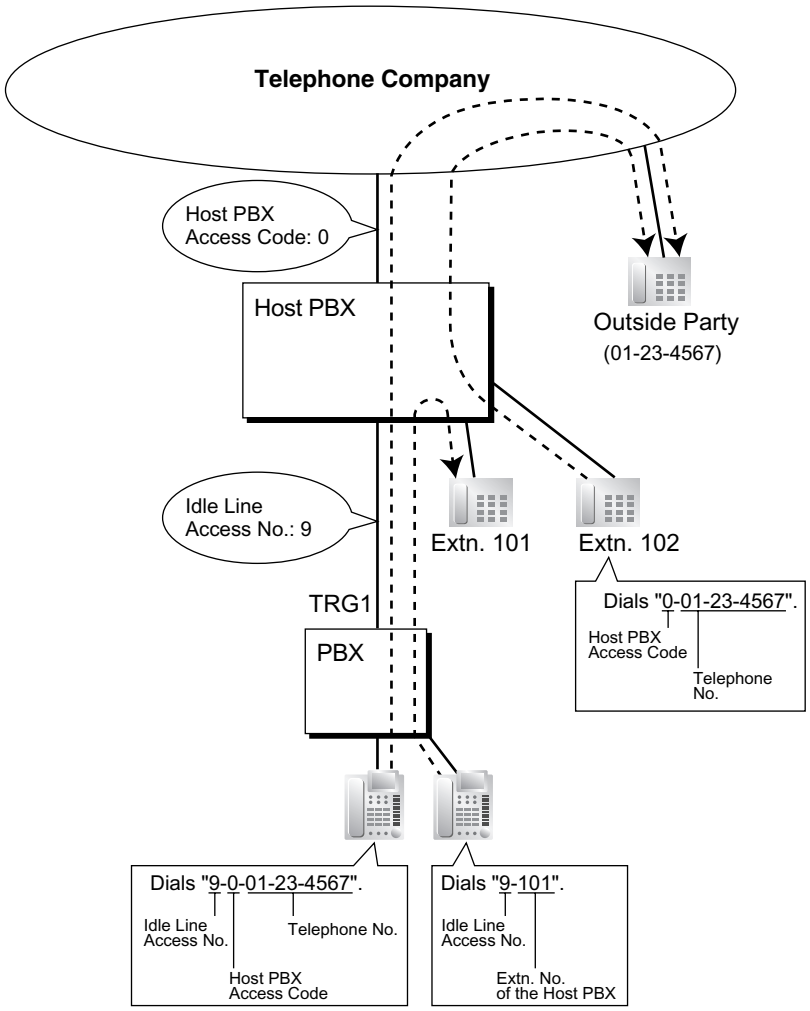

Note

"0" should be assigned as a Host PBX Access code for trunk group (TRG) 1 of the behind PBX.

Conditions

- **TRS/Barring**
  TRS/Barring checks only the dialled telephone number excluding the Host PBX Access code when accessing the telephone company through the host PBX. (→ 1.9.1 Toll Restriction (TRS)/Call Barring (Barring))
- **ARS**
  A pause is not automatically inserted between the user-dialled access code and the subsequent digits when the ARS mode is enabled. (1.10.1 Automatic Route Selection (ARS))
- **SMDR**
  The dialled number including the Host PBX Access code will be recorded on SMDR only if the modified number setting is selected in the ARS setting for SMDR.
- When a Host PBX Access code is assigned to a trunk group, calls to extensions of the host PBX are not recorded on SMDR.
- A Host PBX Access Code can be used to record only long distance calls on SMDR when a trunk port is connected directly to the telephone company (not a host PBX). This is allowed when the long distance code (e.g., “0”) is assigned as the Host PBX Access code. All local calls (e.g., calls that do not require a “0” to be dialled first) are treated as extensions of the telephone company and do not get recorded on SMDR, because in this case this PBX recognises the telephone company as the host PBX. Therefore, only long distance calls are recorded on SMDR.

Programming Manual References

PC Programming Manual

2.9.1 [3-1-1] Trunk Group—TRG Settings—Host PBX Access Code

2.17.1 [11-1] Main—SMDR—SMDR Options—ARS Dial

PT Programming Manual

[471] Host PBX Access Code

Feature Guide References

1.26.1 Station Message Detail Recording (SMDR)

3.1 Capacity of System Resources

1.5.4.9 Special Carrier Access Code

Description

If the PBX has access to multiple telephone companies, a Special Carrier Access code assigned through system programming is required every time a trunk call is made without using ARS.
A preprogrammed Pause time will be automatically inserted between the user-dialled Special Carrier Access code and the subsequent digits. (→ 1.5.4.7 Pause Insertion)

Conditions

- **TRS/Barring**
  TRS/Barring checks only the dialled telephone number excluding the Special Carrier Access code. (→ 1.9.1 Toll Restriction (TRS)/Call Barring (Barring))
- **ARS**
  A pause is not automatically inserted between the user-dialled access code and the subsequent digits when the ARS mode is enabled. (1.10.1 Automatic Route Selection (ARS))
- **If this PBX is installed behind an existing host PBX:**
  A Special Carrier Access code and a Host PBX Access code should be assigned separately: these codes cannot be assigned together as one code. (→ 1.5.4.8 Host PBX Access Code (Access Code to the Telephone Company from a Host PBX))

Programming Manual References

PC Programming Manual

2.13.3 [7-3] Special Carrier Code

PT Programming Manual

[303] Special Carrier Access Code

Feature Guide References

1.10.1 Automatic Route Selection (ARS)

3.1 Capacity of System Resources

1.5.5 Seizing a Line Features

1.5.5.1 Seizing a Line Features—SUMMARY

Description

An extension user can select the line seized for making calls by the following methods:

Feature	Description & Reference
Line Preference—Outgoing	A user can select the line to be seized when going off-hook. → 1.5.5.2 Line Preference—Outgoing
Trunk Access	A user can select the Trunk Access method every time he makes a trunk call. → 1.5.5.3 Trunk Access

1.5.5.2 Line Preference—Outgoing

Description

Through personal programming (Preferred Line Assignment-Outgoing), PT users can select the outgoing line they prefer to originate calls on when going off-hook, from the following line preferences:

Line Preference	Description
ICM/PDN	When an extension user goes off-hook, an extension line is selected automatically. If the extension is a PDN extension, the first available Primary Directory number (PDN) button is selected automatically. (→ 1.7.1 Primary Directory Number (PDN)/Secondary Directory Number (SDN) Extension)
Idle Line	When an extension user goes off-hook, an idle trunk is selected automatically from the assigned trunk groups.
No Line	When an extension user goes off-hook, no line is selected. The extension user must select the desired line to make a call.
Prime Line	When an extension user goes off-hook, the preset line is selected automatically. A prime line can be selected from the Line Access buttons: S-CO, G-CO, L-CO, ICD Group.

Conditions

- **Line Preference Override**
  A user can override the preset Line Preference temporarily by pressing the desired Line Access button or Memory Dialling button (e.g., One-touch Dialling) before going off-hook.
- To select Idle Line Preference, the trunk groups available to the extension should be programmed on a COS basis. Also trunk groups available for Idle Line Access should be assigned.

Programming Manual References

PC Programming Manual

2.8.12 [2-7-2] Class of Service—External Call Block

2.9.2 [3-1-2] Trunk Group—Local Access Priority

2.10.1 [4-1-1] Wired Extension—Extension Settings—Option 4—Outgoing Preferred Line

2.10.10 [4-2-1] Portable Station—Extension Settings—Option 4—Outgoing Preferred Line

PT Programming Manual

[103] Idle Line Access (Local Access)

[500] Trunk Group Number

User Manual References

3.1.2 Settings on the Programming Mode

1.5.5.3 Trunk Access

Description

The following methods can be used to access a trunk:

Method	Description	Accessing method
Idle Line Access (Local Access)	Selects an idle trunk automatically from the assigned trunk groups.	Dial the Idle Line Access number, or press a L-CO button.
Trunk Group Access	Selects an idle trunk from the corresponding trunk group.	Dial the Trunk Group Access number and a trunk group number, or press a G-CO button.
S-CO Line Access	Selects the desired trunk directly.	Dial the S-CO Line Access number and the trunk number, or press the S-CO button.

Conditions

- COS programming determines the trunk groups available for making calls.
- Trunk numbers can be referred on a trunk port basis.
- **Button Assignment**
  A flexible button can be customised as a G-CO, L-CO, or S-CO button as follows:

Type	Parameter
Loop-CO (L-CO)	No parameter (all assigned trunk groups through system programming are applied.)
Group-CO (G-CO)	A specified trunk group.
Single-CO (S-CO)	A specified trunk.

  It is possible to assign:
  – the same trunk to the S-CO button and to a G-CO button.
  – the same trunk group to more than one G-CO button.
  – more than one L-CO button.

  Dialling the Trunk Access number selects a CO button in the following order: S-CO → G-CO → L-CO
- **Direct Trunk Access**
  Pressing an idle CO button automatically switches on the hands-free operation mode and allows a user to use On-hook Dialling. The user need not press the SP-PHONE button, MONITOR button, or lift the handset.
- **Group Hunting Order for Idle Line Access**
  An idle trunk is selected from the trunk groups assigned for Idle Line Access. If multiple trunk groups are available, the trunk group hunting sequence can be determined through system programming.
- **Trunk Hunting Order for Idle Line Access and Trunk Group Access**
  The trunk hunting sequence in a trunk group (from lowest numbered trunk, from highest numbered trunk or rotation) can be determined through system programming.

- A company name or customer name can be assigned on a trunk port basis so that the operator or extension user can view the destination that the external caller is trying to reach before answering. This is useful, for example, when multiple companies share the same operator.
- It is possible to identify the trunk ports that have trunks connected. This prevents extension users from originating a call to a trunk that is not connected.

Programming Manual References

PC Programming Manual

2.7.5 [1-1] Slot—Extension Port—Connection
2.7.11 [1-1] Slot—LCO Port—Connection
2.7.14 [1-1] Slot—BRI Port—Connection
2.7.16 [1-1] Slot—PRI Port (KX-TDA100/KX-TDA200/KX-TDA600 only)—Connection
2.7.19 [1-1] Slot—T1 Port (KX-TDA100/KX-TDA200/KX-TDA600 only)—Connection
2.7.25 [1-1] Slot—E1 Port—Connection
2.7.28 [1-1] Slot—E&M Port (KX-TDA100/KX-TDA200/KX-TDA600 only)—Connection
2.7.31 [1-1] Slot—DID Port—Connection
2.7.34 [1-1] Slot—IP-GW Port—Connection
2.7.38 [1-1] Slot—IP-Extension Port (KX-TDA100/KX-TDA200/KX-TDA600 only)—Connection
2.8.8 [2-6-1] Numbering Plan—Main—Features
→ Idle Line Access (Local Access)
→ Trunk Group Access
→ Single CO Line Access
2.8.12 [2-7-2] Class of Service—External Call Block
2.9.1 [3-1-1] Trunk Group—TRG Settings—Main—Line Hunting Order
2.9.2 [3-1-2] Trunk Group—Local Access Priority
2.10.5 [4-1-4] Wired Extension—Flexible Button
→ Type
→ Parameter Selection (for Single CO)
→ Parameter Selection (for Group CO)
2.10.13 [4-2-3] Portable Station—Flexible Button
→ Type
→ Parameter Selection (for Single CO)
→ Parameter Selection (for Group CO)
2.10.17 [4-3] DSS Console—Flexible Button
→ Type
→ Parameter Selection (for Single CO)
→ Parameter Selection (for Group CO)
2.14.1 [8-1] System Settings—ARS Mode
2.16.1 [10-1] CO Line Settings—CO Name

PT Programming Manual

[400] LCOT/BRI Trunk Connection
[401] LCOT/BRI Trunk Name
[409] LCOT/BRI Trunk Number Reference
[500] Trunk Group Number

Feature Guide References

1.20.2 Flexible Buttons
2.2.1 Class of Service (COS)

User Manual References

1.2.1 Basic Calling

1.6 Memory Dialling Features

1.6.1 Memory Dialling Features

1.6.1.1 Memory Dialling Features—SUMMARY

Description

An extension user can store frequently dialled numbers in the PBX extension data and/or the PBX system data. A stored number is dialled automatically with a simple operation.

1. Features

Feature		Storing Method & Reference
One-touch Dialling		• Personal Programming • System Programming (PC Programming only) → 1.6.1.2 One-touch Dialling
KX-T7710 One-touch Dialling (KX-TDA100/ KX-TDA200/KX-TDA600 only)		System Programming (PC Programming only) → 1.6.1.3 KX-T7710 One-touch Dialling
Last Number Redial (Outgoing Call Log)		Recently dialled telephone numbers are automatically stored. → 1.6.1.4 Last Number Redial
Speed Dialling	**Personal**	• Personal Programming • Personal Operation with the Feature Number • System Programming (PC Programming only) → 1.6.1.5 Speed Dialling—Personal/System
	System	System Programming → 1.6.1.5 Speed Dialling—Personal/System
Quick Dialling		System Programming (PC Programming only) → 1.6.1.6 Quick Dialling

Feature	Storing Method & Reference
Hot Line	• Personal Programming • Personal Operation with the Feature Number • System Programming (PC Programming only) → 1.6.1.7 Hot Line
Incoming Call Log	Incoming call information is automatically stored. → 1.18.2 Incoming Call Log

2. Valid Input

Input	Display while Entering	Description
0–9/✳/#	0–9/✳/#	Store the digits ✳ and #.
PAUSE (Pause)	P	Store a pause by pressing the PAUSE button. (→ 1.5.4.7 Pause Insertion)
FLASH/RECALL (Hooking)*	F	Store a flash/recall signal (EFA mode) by pressing the FLASH/RECALL button at the beginning of the number. (→ 1.11.7 External Feature Access (EFA))
INTERCOM (Secret)*	[ ]	Conceal all or part of the number by pressing the INTERCOM button at the beginning and at the end of the number to be concealed. It is programmable whether the concealed part will appear on SMDR.
TRANSFER (Transfer)*	T	Store a transfer command by pressing the TRANSFER button at the beginning of the number (used only for a One-touch Dialling). (→ 1.12.1 Call Transfer) **[Example]** Storing "T + 305"= Transferring a call to extension 305.

*: Available only when in system/personal programming mode

[Secret Dialling Example]
When storing the number "9-123-456-7890" and concealing the telephone number "123-456-7890",

Enter [9] → [INTERCOM] → [1][2][3][4][5][6][7][8][9][0] → [INTERCOM].

Notes

- It is possible to store a Memory Dialling feature number at the beginning of the Memory Dialling numbers.
- It is possible to store several feature numbers in one Memory Dialling location.

Conditions

- **Trunk Access by Memory Dialling**
  A specific Trunk Access number can be stored with the telephone number in Memory Dialling. However,

if Memory Dialling is done after selecting a trunk, the stored Trunk Access number is ignored and the telephone number is sent using the selected trunk.

1.6.1.2 One-touch Dialling

Description

A PT user can access a person or feature by pressing a single button. This is activated by storing the number (e.g., extension number, telephone number, or feature number) in a One-touch Dialling button.

Conditions

- **One-touch Dialling Button**
  A flexible button can be customised as a One-touch Dialling button.
- **Full One-touch Dialling**
  There is no need to go off-hook before pressing the One-touch Dialling button.

Programming Manual References

PC Programming Manual

2.10.1 [4-1-1] Wired Extension—Extension Settings—Option 5—Flexible Button Programming Mode

2.10.5 [4-1-4] Wired Extension—Flexible Button

→ Type

→ Dial (for One-touch)

2.10.10 [4-2-1] Portable Station—Extension Settings—Option 5—Flexible Button Programming Mode

2.10.13 [4-2-3] Portable Station—Flexible Button

→ Type

→ Dial (for One-touch)

2.10.17 [4-3] DSS Console—Flexible Button

→ Type

→ Dial (for One-touch)

PT Programming Manual

None

Feature Guide References

1.20.2 Flexible Buttons

3.1 Capacity of System Resources

User Manual References

1.2.2 Easy Dialling

1.6.1.3 KX-T7710 One-touch Dialling

Description

The Message button and One-touch buttons on all KX-T7710 telephones connected to the PBX can be customised at once through system programming. The same extension number, telephone number, or feature number will be assigned to the same buttons on each KX-T7710, useful for hotel room extensions or similar applications.
This feature is only available for the KX-TDA100, KX-TDA200, and KX-TDA600.

[Programming Example]

Button	Desired Number
MESSAGE	✳702 (Message Waiting [To Call Back])
One-touch Dial 01	100 (Hotel Operator)
One-touch Dial 02	✳7601 (Wake-up Call)
One-touch Dial 03	102 (Restaurant)
:	:

The MESSAGE button is programmed by default to call back a caller who left a message waiting indication. However, the MESSAGE button can be programmed to perform other features. The eight One-touch buttons have no default setting.

Conditions

- The KX-T7710 has two modes, NORMAL mode and PBX mode, selected by a switch on the telephone. This feature is available only when the KX-T7710 is in the PBX mode.
- This feature is available while hearing a dial tone.
- Please refer to the Quick Reference Guide of the KX-T7710 for additional information.

Programming Manual References

PC Programming Manual

2.8.8 [2-6-1] Numbering Plan—Main—KX-T7710 (KX-TDA100/KX-TDA200/KX-TDA600 only)

PT Programming Manual

None

Feature Guide References

1.20.2 Flexible Buttons

3.2 Exclusive Features Table

User Manual References

1.2.2 Easy Dialling

1.6.1.4 Last Number Redial

Description

Every extension automatically saves recently dialled external telephone numbers to allow the same number to be dialled again easily.

Automatic Redial:
If Last Number Redial is performed in hands-free mode and the called party is busy, redialling will be automatically retried a preprogrammed number of times at preprogrammed intervals. The Redial Call No-answer Ring Duration time is programmable.
This feature is available only on certain PT models which have the SP-PHONE button.

Outgoing Call Log:
Information on outgoing trunk calls is automatically logged at each extension. Users of display PTs can view details of a preset number of recently dialled telephone numbers, and easily call the same outside party again.

Conditions

- If a new number is dialled when the Outgoing Call Log is full and/or Automatic Redial contains a number, the data of the oldest stored call will be deleted, and the new number will be stored.
- If any dialling operations are performed or an incoming call is answered during Automatic Redial, Automatic Redial is cancelled.
- Automatic Redial is not available for some countries/areas when using an analogue trunk.
- **Interrupt Redial**
  When an outside party or seized trunk is busy, a user can attempt to redial the number by pressing the REDIAL button without going on-hook. This can be performed several times without having to go on-hook.
- **Outgoing Call Log Display by REDIAL Button**
  Pressing the REDIAL button on a display PT while on-hook can display the Outgoing Call Log. System programming is required for this operation.
- If the Outgoing Call Log is used to redial an outside party, or a number already stored in the Outgoing Call Log is manually redialled again, the number will be stored in the call log multiple times. However, calls made using the REDIAL button are not stored in the Outgoing Call Log again.
- It is possible to change the number of records that can be stored at each extension through system programming.

Programming Manual References

PC Programming Manual

2.8.4 [2-3] Timers & Counters—Dial / IRNA / Recall / Tone
→ Automatic Redial—Repeat Counter
→ Automatic Redial—Repeat Interval
→ Automatic Redial—Redial Call Ring Duration
→ Automatic Redial—Analogue CO Mute / Busy Detection Timer

2.8.8 [2-6-1] Numbering Plan—Main—Features—Redial

2.8.17 [2-9] System Options—Option 2
→ Redial—Automatic Redial when No Answer (ISDN)
→ Redial—Save Dial After Connection to Redial Memory

→ Redial—Call Log by Redial key

2.10.1 [4-1-1] Wired Extension—Extension Settings—Option 6—Outgoing Call Log Memory

2.10.10 [4-2-1] Portable Station—Extension Settings—Option 6—Outgoing Call Log Memory

PT Programming Manual

[205] Automatic Redial Repeat Times

[206] Automatic Redial Interval

Feature Guide References

3.1 Capacity of System Resources

User Manual References

1.2.3 Redial

1.13.1 Using the Call Log

1.6.1.5 Speed Dialling—Personal/System

Description

An extension user can make calls using abbreviated dialling for frequently dialled numbers which are stored in the PBX extension data, or the PBX system data.

Personal Speed Dialling is also known as Station Speed Dialling.

Conditions

[General]

- Any number (e.g., telephone number, feature number) can be stored in a speed dialling number. A name can be assigned to each Personal Speed Dialling number through personal programming, and System Speed Dialling number.
- **Call Directory—Speed Dialling**
  Display PT users can make a call by selecting stored names on the display.

[Personal Speed Dialling]

- **Display Lock**
  An extension user can lock the Personal Speed Dialling number display to prevent the numbers from being viewed at any extension through personal programming (Display Lock). In this case, the Incoming/Outgoing Call Log displays and the SVM Log display are also locked, and the voice messages in the user's message box cannot be played back. An extension personal identification number (PIN) is required to use this feature. (→ 1.28.1 Extension Personal Identification Number (PIN))
- When an EMEC or MEC card is installed in the PBX, the number of entries programmable for each extension is increased.

[System Speed Dialling]

- **TRS/Barring Override by System Speed Dialling**
  It is possible to override the TRS/Barring using the System Speed Dialling. (→ 1.9.1 Toll Restriction (TRS)/Call Barring (Barring))
- **System Speed Dialling Display by AUTO DIAL/STORE Button**
  Pressing the AUTO DIAL/STORE button on a display DPT while on-hook can display the System Speed Dialling Directory.
- When an EMEC or MEC card is installed in the PBX, System Speed Dialling numbers can be assigned separately for each tenant, depending on the PBX used:
  – KX-TDA30: Each tenant can select to use either the original set of common System Speed Dialling numbers or the additional common set.
  – KX-TDA100/KX-TDA200/KX-TDA600: Each tenant can select to use either the original set of common System Speed Dialling numbers or the set of System Speed Dialling numbers designated specifically for that tenant.

Installation Manual References

KX-TDA30

2.5.7 MEC Card (KX-TDA3105)

KX-TDA100/KX-TDA200

2.3.2 MEC Card (KX-TDA0105)

KX-TDA600

2.3.2 EMEC Card (KX-TDA6105)

Programming Manual References

PC Programming Manual

2.8.8 [2-6-1] Numbering Plan—Main—Features

→ System Speed Dialling / Personal Speed Dialling

→ Personal Speed Dialling - Programming

2.8.11 [2-7-1] Class of Service—COS Settings—TRS—TRS Level for System Speed Dialling

2.10.4 [4-1-3] Wired Extension—Speed Dial

2.12.1 [6-1] System Speed Dial

2.12.6 [6-6] Tenant—System Speed Dial

PT Programming Manual

[001] System Speed Dialling Number

[002] System Speed Dialling Name

[509] TRS/Barring Level for System Speed Dialling

Feature Guide References

3.1 Capacity of System Resources

User Manual References

1.2.2 Easy Dialling

1.13.1 Using the Call Log

1.13.2 Using the Directories

3.1.2 Settings on the Programming Mode

3.3 Customising Your System (System Programming)

1.6.1.6 Quick Dialling

Description

An extension user can access an extension or feature by simply dialling a 1-4 digit Quick Dialling number.

Conditions

[General]

- Quick Dialling is convenient in cases such as the following:
  - Room service calls in a hotel
  - Calling another branch via the public network.
- Quick Dialling numbers follow the flexible numbering plan.
  (→ 2.3.6 Flexible Numbering/Fixed Numbering)
- The following example shows how Quick Dialling numbers can be stored and utilised:

Location No.	Quick Dialling No.	Desired Number
Quick Dialling 01	110	9110 (Trunk Call)
Quick Dialling 02	5	3016 (Room Service)
Quick Dialling 03	2011	90123456789 (Another Branch)
:	:	:

Installing an EMEC/MEC card in the PBX allows a separate set of entries with a maximum of 8 digits to be programmed.

Installation Manual References

KX-TDA30

2.5.7 MEC Card (KX-TDA3105)

KX-TDA100/KX-TDA200

2.3.2 MEC Card (KX-TDA0105)

KX-TDA600

2.3.2 EMEC Card (KX-TDA6105)

Programming Manual References

PC Programming Manual

2.8.9 [2-6-2] Numbering Plan—Quick Dial

PT Programming Manual

None

Feature Guide References

1.30.3 Virtual Private Network (VPN)

3.1 Capacity of System Resources

User Manual References

1.2.2 Easy Dialling

1.6.1.7 Hot Line

Description

An extension user can set his extension to automatically dial a preprogrammed telephone or extension number whenever he goes off-hook.
If the Hot Line feature is set, a dial tone is generated for a specified Waiting time assigned through system programming when the user goes off-hook. During the Waiting time the user can dial another party, overriding the Hot Line feature. If no number is dialled, the preprogrammed number will automatically start being dialled.

This feature is also known as Pickup Dialling.

Conditions

- **Capable Telephone**
  PT, SLT, T1-OPX, and PS

Programming Manual References

PC Programming Manual

2.8.4 [2-3] Timers & Counters—Dial / IRNA / Recall / Tone—Dial—Hot Line (Pickup Dial) Start

2.8.8 [2-6-1] Numbering Plan—Main—Features—Hot Line (Pickup Dial) Program Set / Cancel

2.10.1 [4-1-1] Wired Extension—Extension Settings—Option 2

→ Pickup Dial Set

→ Pickup Dial No.

2.10.10 [4-2-1] Portable Station—Extension Settings—Option 2

→ Pickup Dial Set

→ Pickup Dial No.

PT Programming Manual

[204] Hot Line Waiting Time

Feature Guide References

3.1 Capacity of System Resources

User Manual References

1.2.2 Easy Dialling

1.7 Primary Directory Number (PDN)/Secondary Directory Number (SDN) Features

1.7.1 Primary Directory Number (PDN)/Secondary Directory Number (SDN) Extension

Description

Primary Directory Number (PDN) buttons and Secondary Directory Number (SDN) buttons are ideal for use between bosses and secretaries. When a call (intercom or trunk) arrives at a PDN button on the boss's extension, the call will ring and the LED of the SDN button will flash at the secretary's extension as well, indicating that an incoming call is arriving at the boss's extension. In addition, caller information (e.g., Caller ID) of the incoming call will appear on the secretary's extension. The secretary can answer the call for the boss by simply pressing the SDN button. Delayed ringing can be set for a PDN or SDN button.

A secretary can hold a call answered on the SDN button, and the boss can retrieve the held call simply by pressing the PDN button, like when answering a call with an S-CO button. In addition, a secretary can transfer calls from an SDN button or other button (e.g., S-CO button) to the boss's extension with a simple operation, like when using a DSS button.

An extension can have several SDN buttons, each registered to a different boss's extension. However, only one SDN button can be registered for a single boss at each extension. An extension can have up to eight PDN buttons. PDN buttons can simplify the use of an extension because both intercom and trunk calls can be made and received at a PDN button.

This feature is only available for MPR Software File Version 3.1000 or later.

Making Calls with an SDN Button

When Standard SDN Key mode is assigned to an SDN extension (secretary) through COS programming, SDN extensions (secretaries) can make calls for PDN extensions (bosses) on the SDN button. For example, a boss can ask a secretary to make a call and put the call on hold, after which, the boss can retrieve the held call.

Through COS programming, it is possible to allow an SDN extension to make calls using the COS of the PDN extension. All other settings that are available when using the Walking COS feature are also applied (→ 1.9.5 Walking COS).

SDN Direct Dial

An SDN extension can call a PDN extension or transfer a call to a PDN extension using an SDN button. In this case:

- Only the PDN extension rings (i.e., other SDN extensions do not ring).
- The delayed ringing and DND settings of the PDN extension are ignored.

Depending on the mode selected through COS programming, SDN Direct Dial is performed in one of two ways, as follows:

- Enhanced DSS Key mode: pressing the SDN button once.
- Standard SDN Key mode: pressing the SDN button twice (a dial tone is heard the first time the SDN button is pressed).

Calls answered using the SDN button can be transferred to the PDN extension by simply pressing the SDN button once, regardless of the mode.

LED Indication

The LED patterns and the corresponding status of PDN and SDN buttons are as follows:

Light Pattern	PDN Button Status	SDN Button Status
Off	This extension is idle.	The corresponding PDN extension is idle.
Green on	The extension is on a call using the PDN button.	The extension is on a call using the SDN button.
Slow green flashing	A call is on hold using the PDN button.	A call is on hold using the SDN button.
Moderate green flashing	• A call on a PDN button is on Exclusive Call Hold or consultation hold. • The PDN extension is adding a member to a conference or using the line for an Unattended Conference, on a PDN button.	• A call answered using the SDN button is on Exclusive Call Hold or consultation hold. • The SDN extension is adding a member to a conference, or using the line for an Unattended Conference.
Rapid green flashing	An incoming call is arriving at this extension.	Receiving Hold Recall or automatic callback ringing from a call answered using the SDN button.
Red on	A corresponding SDN extension is: • on a call. • holding the line using Exclusive Call Hold or consultation hold. • adding a member to a conference. • using the line for an Unattended Conference. • receiving Hold Recall or automatic callback ringing.	The corresponding PDN extension or another corresponding SDN extension is: • on a call. • holding the line using Exclusive Call Hold or consultation hold. • adding a member to a conference. • using the line for an Unattended Conference. • receiving an incoming call directed only to the PDN extension (e.g., callback ringing).
Slow red flashing	A call is on hold by a corresponding SDN extension.	A call is on hold by the corresponding PDN extension or another corresponding SDN extension.
Rapid red flashing	A call is arriving at an Incoming Call Distribution (ICD) group in Ring Distribution method that this extension is a member of.	The corresponding PDN extension is receiving an incoming call.

When multiple calls are on a PDN extension, the LED pattern that appears on the corresponding SDN buttons is displayed according to the following priority:

Receiving an incoming call → holding a call → on a call → idle

For example, if a PDN extension receives an incoming call while on a call, the LEDs on the corresponding SDN extensions will show the incoming call.

However, if an SDN extension is handling a call using the SDN button (e.g., on a call, has a call on hold, etc.), the status of that call will be displayed on the SDN button, regardless of the call status of the PDN extension.

Example of a Secretary Handling Calls for Multiple Bosses

The following example shows the LED patterns of the PDN and SDN buttons of each extension and how calls can be handled.

1) A Call From 111-1111 Arrives at Ext. 101

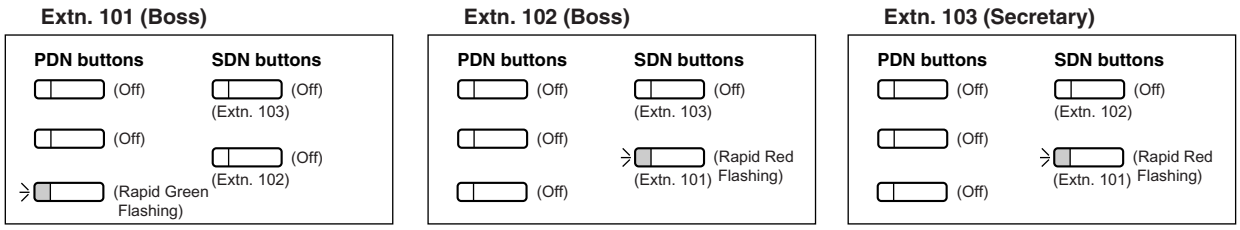

2) The Call From 111-1111 is Answered by Ext. 103

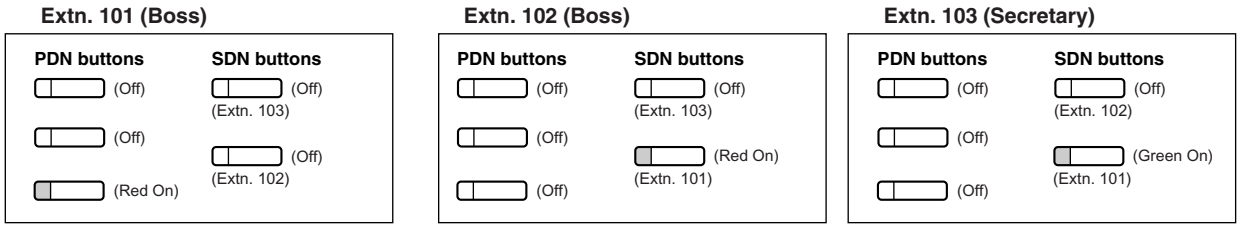

3) The Call From 111-1111 is On Hold by Ext. 103

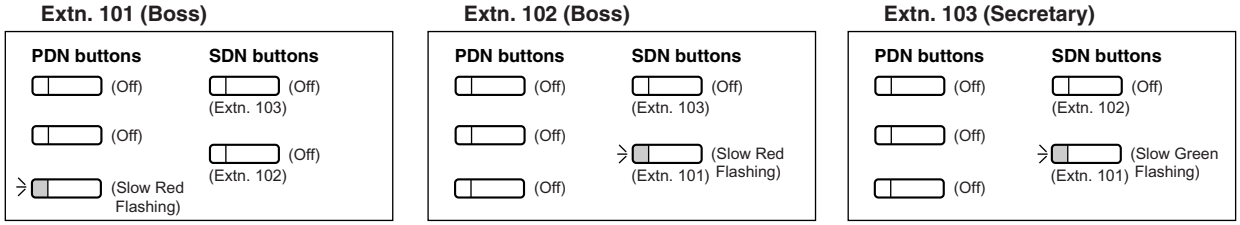

4) The Call Held by Ext. 103 is Answered by Ext. 101

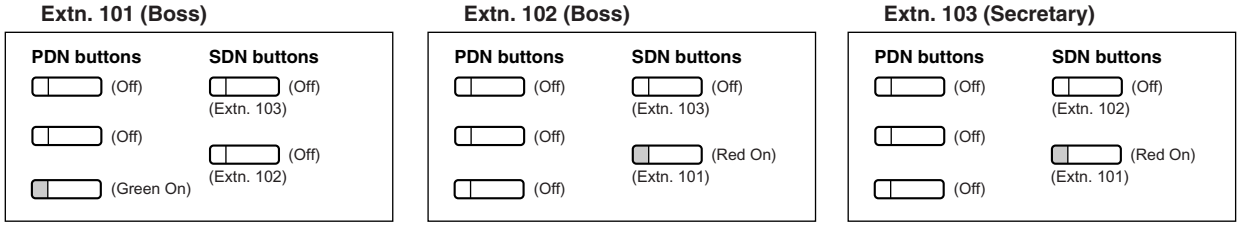

5) A Call From 222-2222 Arrives at Ext. 101

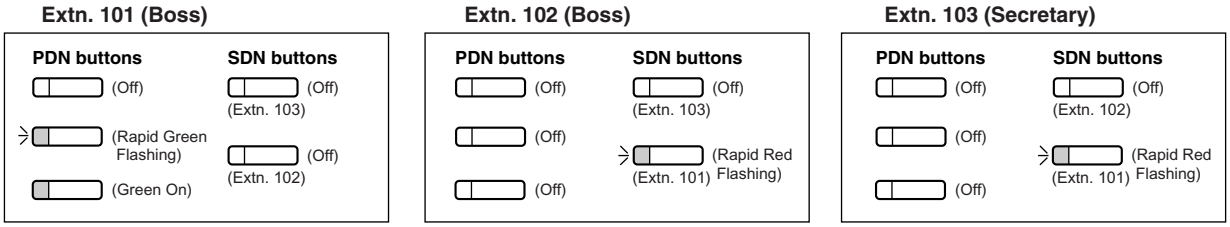

6) A Call From 333-3333 Arrives at Ext. 102

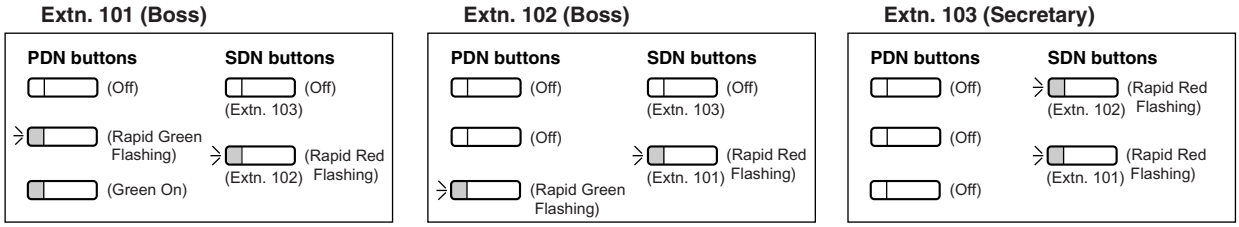

7) The Call From 333-3333 is Answered by Ext. 103

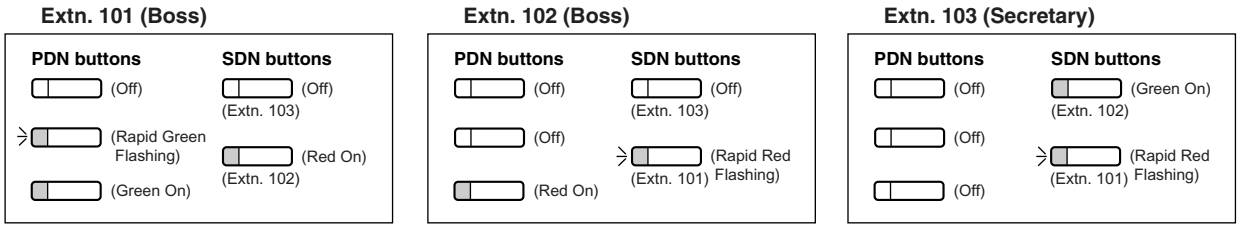

8) The Call From 333-3333 is Transferred by Ext. 103 to Extension 102

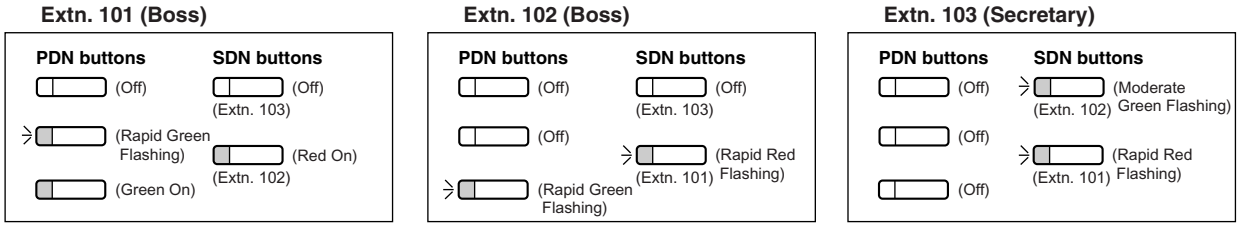

Conditions

[General]

- A flexible button of a PT and a PS can be customised as a PDN or SDN button. A flexible button on a DSS Console can be customised as an SDN button.
- An extension can have up to eight PDN buttons.
- If none of an extension's PDN buttons are idle, the extension will not receive incoming calls, including Call Waiting. Therefore, it is strongly recommended for PDN extensions to have at least three PDN buttons.
- Through COS programming, it is possible to select whether extensions can create SDN buttons on their own extensions using PT programming.
- Up to eight different extensions can assign SDN buttons corresponding to the same PDN extension.
- When a PDN extension has an idle CO button or ICD Group button, calls will arrive on the following buttons according to the following priority:
  - Incoming intercom calls to an ICD group: ICD Group button → PDN button
  - Incoming trunk calls: S-CO button → G-CO button → L-CO button → PDN button
  - Incoming trunk calls to an ICD group: ICD Group button → S-CO button → G-CO button → L-CO button → PDN button
- When multiple calls of the same status (e.g., on hold) are on a PDN extension, the status of the newest call will be displayed on the corresponding SDN extensions. For example, if a PDN extension has two calls ringing, an SDN extension will answer the call that arrived at the PDN extension last, when pressing the SDN button.

- When a PDN extension is a member of an ICD group in Ring Distribution method, and an incoming call arrives at the ICD group, the incoming call status will not appear on the LEDs of the corresponding SDN extensions (→ 1.2.2.1 Incoming Call Distribution Group Features—SUMMARY).
- If none of an extension's PDN buttons are idle, DSS buttons of other extensions registered to the PDN extension will turn on red.
- **Ring Tone Pattern**
  Through system programming, each extension can set ring tone patterns for PDN buttons. Ring tone patterns can be assigned separately for each SDN button.
- **Outgoing Line Preference**
  When "PDN" is selected as the outgoing line preference, outgoing calls will originate on the first available PDN button (→ 1.5.5.2 Line Preference—Outgoing).
- **Incoming Line Preference**
  Through system programming, it is possible for only incoming calls arriving at PDN buttons to be answered simply by going off-hook, by selecting "PDN" as the incoming line preference (→ 1.4.1.2 Line Preference—Incoming). This prohibits calls that arrive on non-PDN buttons (e.g., an SDN button) to be answered when going off-hook.
- **Walking Extension**
  For PDN extensions, the Walking Extension feature can only be used when all PDN buttons are idle (→ 1.28.3 Walking Extension).
- **Wireless XDP Parallel Mode**
  If a PS has PDN or SDN buttons, Wireless XDP Parallel mode cannot be assigned to that PS (→ 1.25.5 Wireless XDP Parallel Mode).
- **OHCA/Whisper OHCA**
  A PDN extension cannot receive OHCA or Whisper OHCA, unless the call is made using a corresponding SDN button (→ 1.8.4.3 Off-hook Call Announcement (OHCA), → 1.8.4.4 Whisper OHCA).
- **Alternate Calling—Ring/Voice**
  It is not possible to temporarily change the called party's preset call receiving method (ring tone or voice) when calling a PDN extension, unless the call is made using a corresponding SDN button (→ 1.5.3 Intercom Call).

[Delayed Ringing]

- The same delayed ringing setting is applied to all PDN buttons on an extension. Delayed ringing can be assigned separately for each SDN button.
- Through system programming, it is possible to select whether caller information (such as Caller ID) is shown immediately on a PS when a call is received while delayed ringing is set.
- SDN buttons can be set to not ring (only flash) for incoming calls. However, this setting is not available for PDN buttons.
- The forward no answer timer starts when a PDN extension starts ringing.

Programming Manual References

PC Programming

2.8.11 [2-7-1] Class of Service—COS Settings—PDN/SDN (MPR Software File Version 3.1000 or later)

2.8.16 [2-8-3] Ring Tone Patterns—Call from Others—Extension—Ring Tone Pattern Plan 1–8

2.8.17 [2-9] System Options—Option 4—System Wireless—SDN Delayed Ringing with LCD (MPR Software File Version 3.1000 or later)

2.10.1 [4-1-1] Wired Extension—Extension Settings—Option 9—PDN Delayed Ringing (MPR Software File Version 3.1000 or later)

2.10.5 [4-1-4] Wired Extension—Flexible Button

→ Type

→ Parameter Selection (for SDN) (MPR Software File Version 3.1000 or later)

→ Ext No. / Floating Ext. No. (for SDN) (MPR Software File Version 3.1000 or later)

→ Optional Parameter (Ringing Tone Type Number) (for Loop CO, Single CO, Group CO, ICD Group, SDN (MPR Software File Version 3.1000 or later))

2.10.10 [4-2-1] Portable Station—Extension Settings—Option 9—PDN Delayed Ringing (MPR Software File Version 3.1000 or later)

2.10.13 [4-2-3] Portable Station—Flexible Button

→ Type

→ Parameter Selection (for SDN) (MPR Software File Version 3.1000 or later)

→ Ext No. / Floating Ext. No. (for SDN) (MPR Software File Version 3.1000 or later)

→ Optional Parameter (Ringing Tone Type Number) (for SDN) (MPR Software File Version 3.1000 or later)

2.10.17 [4-3] DSS Console—Flexible Button

→ Type

→ Parameter Selection (for SDN) (MPR Software File Version 3.1000 or later)

→ Ext No. / Floating Ext. No. (for SDN) (MPR Software File Version 3.1000 or later)

→ Optional Parameter (Ringing Tone Type Number) (for Loop CO, Single CO, Group CO, ICD Group, SDN (MPR Software File Version 3.1000 or later))

PT Programming

None

Feature Guide References

1.2.2.2 Group Call Distribution

1.20.3 LED Indication

3.1 Capacity of System Resources

User Manual References

1.4.2 Holding a Call

1.5.1 Primary Directory Number (PDN)/Secondary Directory Number (SDN) Extension (MPR Software File Version 3.1000 or later)

Using Your Calling Privileges at Another Extension (Remote COS Access)

1.8 Busy Line/Busy Party Features

1.8.1 Automatic Callback Busy (Camp-on)

Description

If the destination or line is busy when a call is made, an extension user can set the Automatic Callback Busy feature. The PBX will monitor the status of the destination or trunk and, when it becomes available, will send a callback ringing to the calling extension to inform the user. After the extension answers the callback ringing, the previously dialled extension number is automatically redialled, or the trunk is automatically seized.

Conditions

- If the callback ringing is not answered within 10 seconds, the callback is cancelled.
- If the extension hears a busy tone before dialling the telephone number, only the trunk or trunk group is reserved. After answering the callback ringing, the extension should dial the telephone number.
- An extension can set only one Automatic Callback Busy. The last setting is effective.
- Multiple extension users can set this feature to one trunk simultaneously.
  However, a maximum of four extension users can set this feature to one extension.
  Callback ringing will be sent to extensions in the order that the feature was set. In other words, the extension that set the feature first will receive a callback ringing first.
- This feature cannot be used for calls to a VPS or an ISDN extension.

Programming Manual References

PC Programming Manual

2.8.8 [2-6-1] Numbering Plan—Main—Features—Automatic Callback Busy Cancel

2.8.10 [2-6-3] Numbering Plan—B/NA DND Call Feature—Automatic Callback Busy

PT Programming Manual

None

User Manual References

1.2.4 When the Dialled Line is Busy or There is No Answer

1.8.2 Executive Busy Override

Description

Allows an extension user to interrupt an existing call to establish a three-party conference call.

Executive Busy Override Deny:
It is possible for extension users to prevent their calls from being intercepted by another extension user.

Conditions

- COS programming determines the extension users who can use Executive Busy Override and set Executive Busy Override Deny.
- This feature does not work when the busy extension is in one of the following conditions:
  - **a)** Executive Busy Override Deny or Data Line Security (→ 1.11.5 Data Line Security) has been set.
  - **b)** While being monitored by another extension (→ 1.8.3 Call Monitor).
  - **c)** While receiving OHCA (→ 1.8.4.3 Off-hook Call Announcement (OHCA)) or Whisper OHCA (→ 1.8.4.4 Whisper OHCA).
  - **d)** During a Conference call (→ 1.14.1 Conference Features).
  - **e)** During a doorphone call (→ 1.17.1 Doorphone Call).
  - **f)** While Live Call Screening (LCS) or Two-way Record is activated (→ 1.24.3 Voice Mail DPT (Digital) Integration).
  - **g)** During Consultation Hold.
- This feature is not available for a trunk-to-trunk call via DISA.

Programming Manual References

PC Programming Manual

2.8.8 [2-6-1] Numbering Plan—Main—Features—Executive Override Deny Set / Cancel

2.8.10 [2-6-3] Numbering Plan—B/NA DND Call Feature—Executive Busy Override

2.8.11 [2-7-1] Class of Service—COS Settings

→CO & SMDR—Executive Busy Override

→Extension Feature—Executive Busy Override Deny

2.10.1 [4-1-1] Wired Extension—Extension Settings—Option 3—Executive Override Deny

2.10.10 [4-2-1] Portable Station—Extension Settings—Option 3—Executive Override Deny

PT Programming Manual

[505] Executive Busy Override

[506] Executive Busy Override Deny

Feature Guide References

2.2.1 Class of Service (COS)

User Manual References

1.2.4 When the Dialled Line is Busy or There is No Answer

1.8.7 Preventing Other People from Joining Your Conversation (Executive Busy Override Deny)

1.8.3 Call Monitor

Description

Allows an extension user to listen to a busy extension user's existing conversation. The user can hear the conversation, but the user's voice is not heard. If desired, interrupting the call to establish a three-party conference call is available.

Conditions

- COS programming determines extension users who can use this feature.
- This feature is available only when the busy extension is in a conversation with another extension or outside party.
- This feature does not work when the busy extension is in one of the following conditions:
  - **a)** Executive Busy Override Deny (→ 1.8.2 Executive Busy Override) or Data Line Security (→ 1.11.5 Data Line Security) has been set.
  - **b)** While receiving OHCA (→ 1.8.4.3 Off-hook Call Announcement (OHCA)) or Whisper OHCA (→ 1.8.4.4 Whisper OHCA).
  - **c)** During a Conference call (→ 1.14.1 Conference Features).
  - **d)** During a doorphone call (→ 1.17.1 Doorphone Call).
  - **e)** While Live Call Screening (LCS) or Two-way Record is activated (→ 1.24.3 Voice Mail DPT (Digital) Integration).
  - **f)** During Consultation Hold.
- This feature stops when the busy extension user presses the following buttons during a conversation (→ 1.20.1 Fixed Buttons and 1.20.2 Flexible Buttons):
  - FLASH/RECALL button
  - HOLD button
  - TRANSFER button
  - CONF (Conference) button
  - DSS button
  - EFA button
  - Two-way Record button
  - Two-way Transfer button
  - One-touch Two-way Transfer button
  - Voice Mail (VM) Transfer button

Programming Manual References

PC Programming Manual

2.8.10 [2-6-3] Numbering Plan—B/NA DND Call Feature—Call Monitor

2.8.11 [2-7-1] Class of Service—COS Settings—CO & SMDR—Call Monitor

2.10.1 [4-1-1] Wired Extension—Extension Settings

→Option 2—Data Mode

→Option 3—Executive Override Deny

2.10.10 [4-2-1] Portable Station—Extension Settings—Option 3—Executive Override Deny

PT Programming Manual

None

Feature Guide References

2.2.1 Class of Service (COS)

User Manual References

1.2.4 When the Dialled Line is Busy or There is No Answer

1.8.4 Second Call Notification to Busy Extension

1.8.4.1 Second Call Notification to Busy Extension—SUMMARY

Description

When attempting to call a busy extension (ringing or having a conversation), an extension user can send a Call Waiting indication to the busy extension (**Call Waiting**). The notification receiving method depends on the called extension's personal setting and the telephone type:

Notification Receiving Method	Description & Reference
Call Waiting Tone	Sends the Call Waiting tone to the busy extension. → 1.8.4.2 Call Waiting Tone
Off-hook Call Announcement (OHCA)	Talk with the busy extension using the built-in speaker and microphone of the called extension while the existing call is made using the handset. → 1.8.4.3 Off-hook Call Announcement (OHCA)
Whisper OHCA	Send a spoken message to a busy extension that will be heard directly by only the called extension user, through the handset, without interrupting the ongoing conversation. → 1.8.4.4 Whisper OHCA

Conditions

- Each extension user can choose to receive Call Waiting tone, OHCA, Whisper OHCA, or none of these.
- OHCA and Whisper OHCA are enabled or disabled by the COS of the calling extension.
- OHCA and Whisper OHCA do not work for some telephone types. In such cases, the Call Waiting tone will be sent to the called extension.

Calling Extension's OHCA COS Mode	Called Extension's Call Waiting Mode			
	OFF	ON		
	Cancel	Call Waiting Tone	OHCA	Whisper OHCA
Disable	Call Waiting disabled	Call Waiting tone	Call Waiting tone	Call Waiting tone
Enable	Call Waiting disabled	Call Waiting tone	OHCA (or Call Waiting tone)	Whisper OHCA (or Call Waiting tone)

- The notification receiving methods (Call Waiting tone, OHCA, and Whisper OHCA) are available only when the called extension is having a conversation with another party. If the called party is not yet connected with the other party (e.g., still ringing, on hold, etc.), the calling extension will hear a ringback tone and will be kept waiting until the called extension becomes available to receive the call waiting notification.

- If none of these notification receiving methods (Call Waiting tone, OHCA, or Whisper OHCA) are set at the called party's extension, the caller will hear a reorder tone.

Feature Guide References

1.1.3.3 Call Waiting

User Manual References

1.2.4 When the Dialled Line is Busy or There is No Answer

1.8.3 Receiving Call Waiting (Call Waiting/Off-hook Call Announcement [OHCA]/Whisper OHCA)

1.8.4.2 Call Waiting Tone

Description

When an extension user attempts to call a busy extension (ringing or having a conversation), the Call Waiting tone can be sent to the called extension to let him know another call is waiting.

Conditions

- This feature only works if the called extension has activated Call Waiting. If it is activated, the calling extension will hear a ringback tone.
- Call Waiting tone can be selected (Tone 1 or Tone 2) through personal programming (Call Waiting Tone Type Selection).

Programming Manual References

PC Programming Manual

2.8.4 [2-3] Timers & Counters—Miscellaneous—Caller ID—Visual Caller ID Display

2.8.10 [2-6-3] Numbering Plan—B/NA DND Call Feature

→BSS / OHCA / Whisper OHCA / DND Override

→BSS / OHCA / Whisper OHCA / DND Override-2

2.10.1 [4-1-1] Wired Extension—Extension Settings

→Option 2—Manual C. Waiting for Extension Call

→Option 2—Automatic C. Waiting

→Option 4—Call Waiting Tone Type

2.10.10 [4-2-1] Portable Station—Extension Settings

→Option 2—Manual C. Waiting for Extension Call

→Option 2—Automatic C. Waiting

→Option 4—Call Waiting Tone Type

PT Programming Manual

None

User Manual References

1.8.3 Receiving Call Waiting (Call Waiting/Off-hook Call Announcement [OHCA]/Whisper OHCA)

3.1.2 Settings on the Programming Mode

1.8.4.3 Off-hook Call Announcement (OHCA)

Description

An extension user can talk with a busy extension through the built-in speaker and microphone of the called party's PT. If the existing call is using a handset, a second conversation is made using the speakerphone and microphone so that the called extension can talk to both parties.

Conditions

- COS programming determines which extensions can use this feature.
- This feature is available when the called extension uses one of the following telephones:
  - KX-T7625, KX-T7630, KX-T7633, KX-T7636
  - KX-T7536
  - KX-T7436
  - KX-T7235 (except KX-T7235G/FR/SL/NE)
- If the KX-T7235G/FR/SL/NE are connected to the PBX, the OHCA feature for the KX-T7235 should be disabled through system programming.
- The OHCA feature cannot be used in the following cases:

  a) COS or called extension's telephone type is not available for this feature.

  b) The called extension (DPT) is connected to a PC (PC Console or PC Phone) via the USB Module.

  c) The called extension (DPT) is in the Digital XDP connection.

  The Call Waiting tone is sent to the called extension. (→ 1.8.4.2 Call Waiting Tone)
- While an extension is receiving OHCA, if the extension user places the current trunk call on hold or transfers the current intercom call or trunk call, OHCA will become disabled and the calling extension will start to hear a ringback tone.
- While an extension is receiving OHCA, if the extension user places the current intercom call on hold, the called extension can talk to the calling extension through the handset.

Programming Manual References

PC Programming Manual

2.8.10 [2-6-3] Numbering Plan—B/NA DND Call Feature

→BSS / OHCA / Whisper OHCA / DND Override

→BSS / OHCA / Whisper OHCA / DND Override-2

2.8.11 [2-7-1] Class of Service—COS Settings—CO & SMDR—OHCA / Whisper OHCA

PT Programming Manual

None

Feature Guide References

2.2.1 Class of Service (COS)

User Manual References

1.8.3 Receiving Call Waiting (Call Waiting/Off-hook Call Announcement [OHCA]/Whisper OHCA)

1.8.4.4 Whisper OHCA

Description

An extension user can send a spoken message to a busy extension that will be heard directly by only the called extension user, through the handset, without interrupting the ongoing conversation. The caller cannot hear the ongoing conversation or the called extension user's reply, unless the called extension user puts the current party on hold and switches to the waiting caller.

Conditions

- COS programming determines which extensions can use this feature.
- This feature is available when the calling and called extension use one of the following telephones:
  - KX-T7600 series
  - KX-T7500 series
  - KX-T7400 series (except KX-T7451)
  - IP-PT
- If the Whisper OHCA feature cannot be used due to COS or telephone type, the Call Waiting tone will be sent to the called extension. (→ 1.8.4.2 Call Waiting Tone)
- If the called extension does not use a KX-T7600, KX-T7500, or KX-T7400 series telephone or an IP-PT, but forces Whisper OHCA, the announcement may be heard by the other party.
- It is possible to enable Whisper OHCA on any telephone. However, it may not work properly. (e.g., The voice may be heard by the other party.)
- While an extension is receiving Whisper OHCA, if the extension user places the current trunk call on hold or transfers the current intercom call or trunk call, Whisper OHCA will become disabled and the calling extension will start to hear a ringback tone.
- While an extension is receiving Whisper OHCA, if the extension user places the current intercom call on hold, the called extension can talk to the calling extension through the handset.

Programming Manual References

PC Programming Manual

2.8.10 [2-6-3] Numbering Plan—B/NA DND Call Feature

→BSS / OHCA / Whisper OHCA / DND Override

→BSS / OHCA / Whisper OHCA / DND Override-2

2.8.11 [2-7-1] Class of Service—COS Settings—CO & SMDR—OHCA / Whisper OHCA

PT Programming Manual

None

Feature Guide References

2.2.1 Class of Service (COS)

User Manual References

1.8.3 Receiving Call Waiting (Call Waiting/Off-hook Call Announcement [OHCA]/Whisper OHCA)

1.9 Toll Restriction (TRS)/Call Barring (Barring) Features

1.9.1 Toll Restriction (TRS)/Call Barring (Barring)

Description

TRS/Barring can prohibit an extension user from making certain trunk calls by COS programming. It is applied when the user goes off-hook, a trunk is seized and then a dialled number is sent to the trunk. Each COS is programmed to have a TRS/Barring level for each time mode (day/lunch/break/night). There are seven levels available. Level 1 is the highest level and level 7 is the lowest. That is, level 1 allows all trunk calls and level 7 prohibits all trunk calls. Levels 2 through 6 are used to restrict calls by combining preprogrammed Denied and Exception Code Tables.

Denied Code Tables

An outgoing trunk call made by an extension with a level between 2 and 6 is first checked against the applicable Denied Code Tables. If the leading digits of the dialled number (not including the Trunk Access number) are not found in the table, the call is made. There are five Denied Code Tables, one for each of Levels 2 through 6 respectively.
Complete every table by storing numbers that are to be prohibited. These numbers are defined as denied codes.

Exception Code Tables

These tables are used to override a programmed denied code. A call denied by the applicable Denied Code Tables is checked against the applicable Exception Code Tables, and if a match is found, the call is made. There are five Exception Code Tables, for Levels 2 through 6 respectively.
Complete every table by storing numbers that are exceptions to the denied codes. These numbers are defined as exception codes.

TRS/Barring Override by System Speed Dialling

If the call is made using System Speed Dialling, the call can override the TRS/Barring. Each COS is programmed to have a TRS/Barring level for System Speed Dialling.
Once this feature is set, it permits all extension users to make System Speed Dialling calls with the level for System Speed Dialling. Any extension which sets Extension Dial Lock can also make a call using System Speed Dialling.
→ 2.8.11 [2-7-1] Class of Service—COS Settings—TRS—TRS Level for System Speed Dialling
→ [300] TRS/Barring Override by System Speed Dialling

TRS/Barring Level

TRS/Barring level is determined by the applicable levels of Denied Code Tables and Exception Code Tables.

	Denied Code Tables*1	Exception Code Tables*2
Level 1	Not Programmable	Not Programmable
Level 2	Table for Level 2	Tables for Levels 2 through 6
Level 3	Tables for Levels 2 and 3	Tables for Levels 3 through 6
Level 4	Tables for Levels 2 through 4	Tables for Levels 4 through 6
Level 5	Tables for Levels 2 through 5	Tables for Levels 5 through 6
Level 6	Tables for Levels 2 through 6	Tables for Level 6
Level 7	Not Programmable	Not Programmable

*1: → 2.13.1 [7-1] Denied Code—Denied Code Tables—Level 2–Level 6
→ [301] TRS/Barring Denied Code

*2: → 2.13.2 [7-2] Exception Code—Exception Code Tables—Level 2–Level 6
→ [302] TRS/Barring Exception Code

Explanation:

Level 1:

Allows all calls.

Level 2:

Denies codes stored in the Denied Code Table for Level 2 except the codes stored in Exception Code Tables for Levels 2 through 6.

Level 3:

Denies codes stored in the Denied Code Tables for Levels 2 and 3 except the codes stored in Exception Code Tables for Levels 3 through 6.

•
•
•

Level 7:

Allows intercom calls only.

[Programming Example]

COS No.	Level for Time Mode*1				Level for System Speed Dialling*2
	Day	Lunch	Break	Night	
1	1	1	1	6	1
2	2	2	2	6	1
:	:	:	:	:	:

*1: → 2.8.11 [2-7-1] Class of Service—COS Settings—TRS—TRS Level—Day, Lunch, Break, Night
→ [501] TRS/Barring Level

*2: → 2.13.5 [7-5] Miscellaneous—TRS Override by System Speed Dialling
→ [509] TRS/Barring Level for System Speed Dialling

[Flowchart]

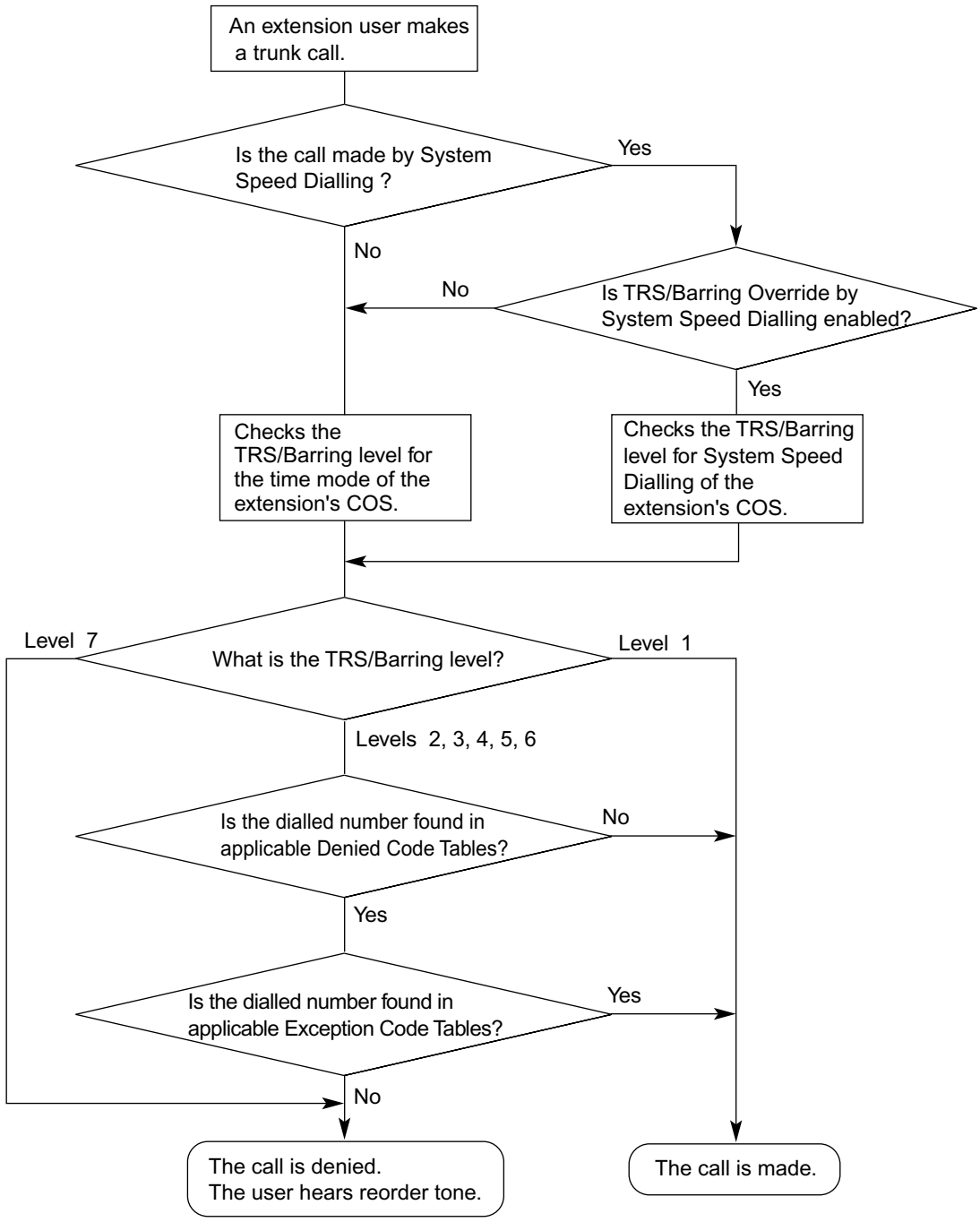

Conditions

WARNING

The software contained in the TRS/Barring feature to allow user access to the network must be upgraded to recognise newly established network area codes and exchange codes as they are placed into service.

Failure to upgrade the on-premise PBXs or peripheral equipment to recognise the new codes as they are established will restrict the customer and users of the PBX from gaining access to the network and to these codes.

KEEP THE SOFTWARE UP TO DATE WITH THE LATEST DATA.

- A COS should be assigned for each extension.
  → 2.10.1 [4-1-1] Wired Extension—Extension Settings—Main—COS
  → 2.10.10 [4-2-1] Portable Station—Extension Settings—Main—COS
  → [602] Class of Service
- TRS/Barring checks are applied to the following:
  – ARS
  – Trunk Access (Idle Line/Trunk Group/S-CO Line)
- It is programmable whether "✳" or "#" is checked by the TRS/Barring. This is useful in preventing unauthorised calls which could be possible through certain telephone company exchanges.
  → 2.13.5 [7-5] Miscellaneous—TRS Check for dial "* #"
- It is programmable whether TRS/Barring checks the digits dialled after the External Feature Access during a trunk call. (→ 1.11.7 External Feature Access (EFA))
  → 2.13.5 [7-5] Miscellaneous—TRS Check after EFA
- **Host PBX Access Code/Special Carrier Access Code**
  TRS/Barring checks for numbers dialled with a Host PBX Access code (→ 1.5.4.8 Host PBX Access Code (Access Code to the Telephone Company from a Host PBX)) or a Special Carrier Access code (→ 1.5.4.9 Special Carrier Access Code) in the following cases:

Type	Stored		Not stored
	Found	Not found	
Host PBX Access Code	Deletes the code. A TRS/Barring check is carried out on the following digits.	The call is made (excepted from TRS/Barring).	TRS/Barring checks the whole number.
Special Carrier Access Code	Deletes the code. A TRS/Barring check is carried out on the following digits.	TRS/Barring checks the whole number.	TRS/Barring checks the whole number.

- **ARS**
  If ARS is applied to a dialled number, TRS/Barring will check the user-dialled number (not the modified number by ARS). In this case, a Host PBX Access code and/or a Special Carrier Access code will not be checked.
- **Dialling Digit Restriction during Conversation**
  The dialling of digits can be restricted while engaged on a received trunk call. If the number of dialled digits exceeds the preprogrammed limitation, the line will be disconnected.
  → 2.13.5 [7-5] Miscellaneous—Dial Digits Limitation After Answering—Dial Digits
- It is possible to select through system programming whether the trunk is disconnected when the Inter-digit time expires without the TRS/Barring check being completed.
  → 2.13.5 [7-5] Miscellaneous—Mode when Dial Time-out before TRS Check
  – If no disconnection is chosen, the TRS/Barring check will also be performed after the Inter-digit time expires.
  – If disconnection is chosen, the line will be disconnected when the trunk Inter-digit time expires. This also prevents EFA from being used.

  This setting applies to all trunks.
- A TRS/Barring level can be changed by some features. The priority of features, when multiple features are used, is as follows:

1) Dial Tone Transfer (→ 1.9.4 Dial Tone Transfer)
2) Budget Management (→ 1.9.2 Budget Management)
3) TRS/Barring Override by System Speed Dialling
4) Walking COS/Verification Code Entry
(→ 1.9.5 Walking COS, 1.9.6 Verification Code Entry)
5) Extension Dial Lock

Programming Manual References

PC Programming Manual

2.8.11 [2-7-1] Class of Service—COS Settings—TRS
→TRS Level—Day, Lunch, Break, Night
→TRS Level for System Speed Dialling
2.10.1 [4-1-1] Wired Extension—Extension Settings—Main—COS
2.10.5 [4-1-4] Wired Extension—Flexible Button
→Type
→Parameter Selection (for TRS Level Change)
2.10.10 [4-2-1] Portable Station—Extension Settings—Main—COS
2.10.13 [4-2-3] Portable Station—Flexible Button
→Type
→Parameter Selection (for TRS Level Change)
2.10.17 [4-3] DSS Console—Flexible Button
→Type
→Parameter Selection (for TRS Level Change)
2.13.1 [7-1] Denied Code
2.13.2 [7-2] Exception Code
2.13.3 [7-3] Special Carrier Code
2.13.5 [7-5] Miscellaneous

PT Programming Manual

[300] TRS/Barring Override by System Speed Dialling
[301] TRS/Barring Denied Code
[302] TRS/Barring Exception Code
[501] TRS/Barring Level
[509] TRS/Barring Level for System Speed Dialling
[602] Class of Service

Feature Guide References

1.5.5.3 Trunk Access
1.6.1.5 Speed Dialling—Personal/System
1.9.3 Extension Dial Lock
1.10.1 Automatic Route Selection (ARS)
2.2.1 Class of Service (COS)
2.2.4 Time Service
3.1 Capacity of System Resources

1.9.2 Budget Management

Description

Limits the telephone usage to a preprogrammed budget on an extension basis. If the amount of the call charge reaches the limit, an extension user cannot make further trunk calls. An extension assigned as the manager may increase the limit or clear the amount of the call charge.

Conditions

- If the limit is reached, TRS/Barring Level 7 is applied. (→ 1.9.1 Toll Restriction (TRS)/Call Barring (Barring))
- **Budget Management for Verified Call**
  If an extension user makes a trunk call with a verification code, the call charge will be added to the total for the verification code (not the extension). (→ 1.9.6 Verification Code Entry) Each verification code can be assigned a call charge limit.
- **Budget Management for Walking COS**
  If an extension user makes a trunk call from an extension using the Walking COS feature, the call charge will be added to the extension of the extension user (not the extension that the call was made on). (1.9.5 Walking COS)
- Pay tone service or ISDN Advice of Charge (AOC) service is required for this feature.
- It is possible to select whether to disconnect the line (disconnect mode) after a warning tone or only to send a warning tone when the amount of the call charge reaches the preprogrammed limit during a conversation.
- When multiple extension users are using the same verification code or the same extension (through the use of Walking COS) simultaneously, each caller can have access to the total remaining budget of the extension or verification code.

Programming Manual References

PC Programming Manual

2.10.1 [4-1-1] Wired Extension—Extension Settings—Option 3—Charge Limit

2.10.10 [4-2-1] Portable Station—Extension Settings—Option 3—Charge Limit

2.12.3 [6-3] Verification Code—Budget Management

2.12.9 [6-8] Hotel & Charge—Charge—Charge Options—Action at Charge Limit

PT Programming Manual

None

User Manual References

3.2.2 Manager Programming

1.9.3 Extension Dial Lock

Description

An extension user can change the TRS/Barring level of the telephone (→ 1.9.1 Toll Restriction (TRS)/Call Barring (Barring)) so that other users cannot make inappropriate trunk calls. An extension personal identification number (PIN) is used to unlock the telephone (→ 1.28.1 Extension Personal Identification Number (PIN)).

This feature is also known as Electronic Station Lockout.

Conditions

- This feature also restricts changing the FWD destination. (→ 1.3.1.2 Call Forwarding (FWD))
- **Remote Extension Dial Lock**
  Overrides Extension Dial Lock. If an extension assigned as the manager sets Remote Extension Dial Lock on an extension that has already been locked by the extension user, the user cannot unlock it. If a manager extension unlocks an extension that has been locked by the extension user, the extension will be unlocked.
  This feature is also known as Remote Station Lock Control.
- **TRS/Barring Level**
  COS programming determines the TRS/Barring level for Extension Dial Lock.

Programming Manual References

PC Programming Manual

2.8.8 [2-6-1] Numbering Plan—Main—Features

→Extension Dial Lock Set / Cancel

→Remote Extension Dial Lock Off

→Remote Extension Dial Lock On

2.8.11 [2-7-1] Class of Service—COS Settings—TRS—TRS Level on Extension Lock

PT Programming Manual

[510] TRS/Barring Level for Extension Dial Lock

Feature Guide References

2.2.1 Class of Service (COS)

User Manual References

1.6.4 Preventing Other People from Using Your Telephone (Extension Dial Lock)

2.1.1 Extension Control

1.9.4 Dial Tone Transfer

Description

An extension assigned as the manager can change the TRS/Barring level (→ 1.9.1 Toll Restriction (TRS)/ Call Barring (Barring)) for an extension user temporarily. After that, the extension user can make his call.

[Example] An extension user can call a manager to release the restriction on outgoing calls (e.g., international calls).

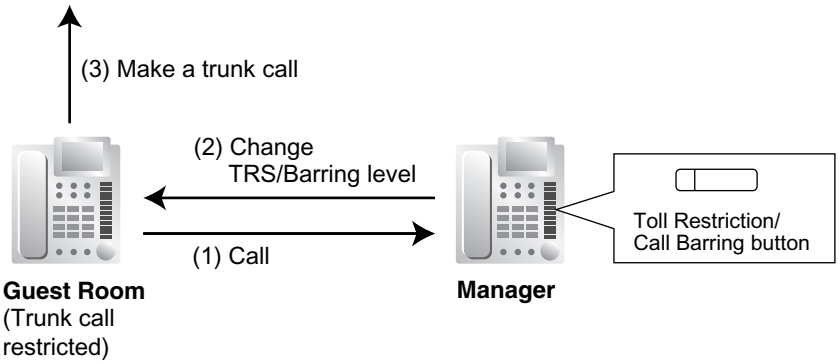

Conditions

- The modified TRS/Barring level only applies to the next one call placed at the user's extension.
- **Toll Restriction/Call Barring Button**
  A manager extension must store the desired TRS/Barring level in the Toll Restriction/Call Barring button. A flexible button can be customised as the Toll Restriction/Call Barring button.

Programming Manual References

PC Programming Manual

2.10.5 [4-1-4] Wired Extension—Flexible Button
→ Type
→ Parameter Selection (for TRS Level Change)

2.10.13 [4-2-3] Portable Station—Flexible Button
→ Type
→ Parameter Selection (for TRS Level Change)

2.10.17 [4-3] DSS Console—Flexible Button
→ Type
→ Parameter Selection (for TRS Level Change)

PT Programming Manual

None

Feature Guide References

1.20.2 Flexible Buttons

User Manual References

2.1.3 Restriction Level Control (Dial Tone Transfer)

1.9.5 Walking COS

Description

A user can enter his extension number and extension personal identification number (PIN) (→ 1.28.1 Extension Personal Identification Number (PIN)) at another extension, to make the following types of call using his Class of Service, including TRS level, overriding the other extension's Class of Service.

- Trunk call
- TIE line call
- Intercom call
- External Relay Control (→ 1.17.10 External Relay Control)

After performing Walking COS, the following features are also available for the specified extension:

- Call Forwarding (FWD)/Do Not Disturb (DND) setting (→ 1.3.1 Call Forwarding (FWD)/Do Not Disturb (DND))
- Incoming Call Distribution Group Log-in/Log-out (→ 1.2.2.7 Log-in/Log-out)
- Absent Message setting (→ 1.19.2 Absent Message)
- Extension Dial Lock (→ 1.9.3 Extension Dial Lock)
- Time Service—Changing the Time Mode (day/lunch/break/night) (→ 2.2.4 Time Service)
- CLIP number setting (CLIP ID) (only available for MPR Software File Version 3.1000 or later.) (→ 1.21.1.2 Calling/Connected Line Identification Presentation (CLIP/COLP))

Conditions

- When a trunk call is made using Walking COS:
  - the Class of Service of the specified extension is applied (→ 2.2.1 Class of Service (COS))
  - the budget of the specified extension is applied (→ 1.9.2 Budget Management)
  - the Itemised Billing code of the specified extension is applied (→ 1.10.1 Automatic Route Selection (ARS))
  - the specified extension number is recorded on SMDR as the call originator, instead of the extension number of the actual extension used (→ 1.26.1 Station Message Detail Recording (SMDR)).
- Walking COS is also available through DISA. (→ 1.17.6 Direct Inward System Access (DISA))
- **Extension PIN**
  An extension personal identification number (PIN) is required to use this feature. (→ 1.28.1 Extension Personal Identification Number (PIN)) If the wrong PIN is entered three times, the line will be disconnected.
- This feature can not be used for extensions which the extension being operated is prevented from calling by Internal Call Block. (→ 1.1.2.2 Internal Call Block)

Programming Manual References

PC Programming Manual

2.8.8 [2-6-1] Numbering Plan—Main—Features—User Remote Operation / Walking COS / Verification Code

2.8.11 [2-7-1] Class of Service—COS Settings—Extension Feature—Remote Operation by Other Extension

2.10.1 [4-1-1] Wired Extension—Extension Settings—Option 2—Extension PIN

2.10.10 [4-2-1] Portable Station—Extension Settings—Option 2—Extension PIN

PT Programming Manual

[005] Extension Personal Identification Number (PIN)

Feature Guide References

1.17.6 Direct Inward System Access (DISA)

2.2.1 Class of Service (COS)

User Manual References

1.2.7 Calling without Restrictions

1.2.9 Setting Your Telephone from Another Extension or through DISA (Remote Setting)

1.9.6 Verification Code Entry

Description

An extension user can enter a verification code when calling from his own or any other extension, to change the TRS/Barring level (→ 1.9.1 Toll Restriction (TRS)/Call Barring (Barring)) or to identify the call for accounting and billing purposes. A verification code personal identification number (PIN) is required to use this feature.

Conditions

WARNING
There is a risk that fraudulent telephone calls will be made if a third party discovers a personal identification number (PIN) (verification code PIN or extension PIN) of the PBX.
The cost of such calls will be billed to the owner/renter of the PBX.
To protect the PBX from this kind of fraudulent use, we strongly recommend:

a) Keeping PINs secret.

b) Selecting complex, random PINs that cannot be easily guessed.

c) Changing PINs regularly.

- When a trunk call is made using Verification Code Entry:
  - the Class of Service of the specified extension is applied (→ 2.2.1 Class of Service (COS))
  - the budget of the specified extension is applied (→ 1.9.2 Budget Management)
  - the Itemised Billing code of the specified extension is applied (→ 1.10.1 Automatic Route Selection (ARS))
  - ✳ + verification code is recorded on SMDR as the call originator, instead of the extension number of the actual extension used (→ 1.26.1 Station Message Detail Recording (SMDR)).
- **Verification Code Entry through DISA**
  This feature is also available through DISA. (→ 1.17.6 Direct Inward System Access (DISA))
- **Verification Code PIN**
  A verification code PIN must be assigned for each verification code through system programming or through manager programming.
- **Verification Code PIN Lock**
  If the wrong PIN is entered three times, the line will be disconnected. If the wrong PIN is entered a preprogrammed number of times successively, the PIN for the verification code will be locked. Only an extension assigned as the manager can unlock it. In this case, the PIN will be unlocked and cleared.

- **Budget Management for Verified Calls**
  A limit can be assigned to the total of all call charges for each verification code.

  [Example of Verification Codes and Their Programming]

Location	Code*1	Name*2	PIN*3	COS*4	Itemised Billing Code for ARS*5	Budget*6
0001	1111	Tom Smith	1234	1	2323	5000Euro
0002	2222	John White	9876543210	3	4545	3000Euro
:	:	:	:	:	:	:

*1: → 2.12.3 [6-3] Verification Code—Verification Code
→ [120] Verification Code
*2: → 2.12.3 [6-3] Verification Code—User Name
→ [121] Verification Code Name
*3: → 2.12.3 [6-3] Verification Code—Verification Code PIN
→ [122] Verification Code Personal Identification Number (PIN)
*4: → 2.12.3 [6-3] Verification Code—COS Number
→ [123] Verification Code COS Number
*5 →2.12.3 [6-3] Verification Code—Itemised Billing Code for ARS
*6 →2.12.3 [6-3] Verification Code—Budget Management

Programming Manual References

PC Programming Manual

2.8.4 [2-3] Timers & Counters—Miscellaneous—Extension PIN—Lock Counter

2.8.8 [2-6-1] Numbering Plan—Main—Features—User Remote Operation / Walking COS / Verification Code

2.10.1 [4-1-1] Wired Extension—Extension Settings
→Option 2—ARS Itemised Code
→Option 3—Charge Limit

2.10.10 [4-2-1] Portable Station—Extension Settings
→Option 2—ARS Itemised Code
→Option 3—Charge Limit

2.12.3 [6-3] Verification Code

PT Programming Manual

[120] Verification Code

[121] Verification Code Name

[122] Verification Code Personal Identification Number (PIN)

[123] Verification Code COS Number

Feature Guide References

1.9.2 Budget Management

1.10.1 Automatic Route Selection (ARS)

2.2.1 Class of Service (COS)

2.2.6 Manager Features

3.1 Capacity of System Resources

User Manual References

1.2.7 Calling without Restrictions
3.2.2 Manager Programming

1.10 Automatic Route Selection (ARS) Features

1.10.1 Automatic Route Selection (ARS)

Description

ARS automatically selects the carrier available at the time an outgoing trunk call is made according to preprogrammed settings. The dialled number will be checked and modified to connect the appropriate carrier.

[Carrier Selection Procedure Flowchart]

The numbers ⓧ in the flowchart correspond to the [Programming Procedures] on the following pages.

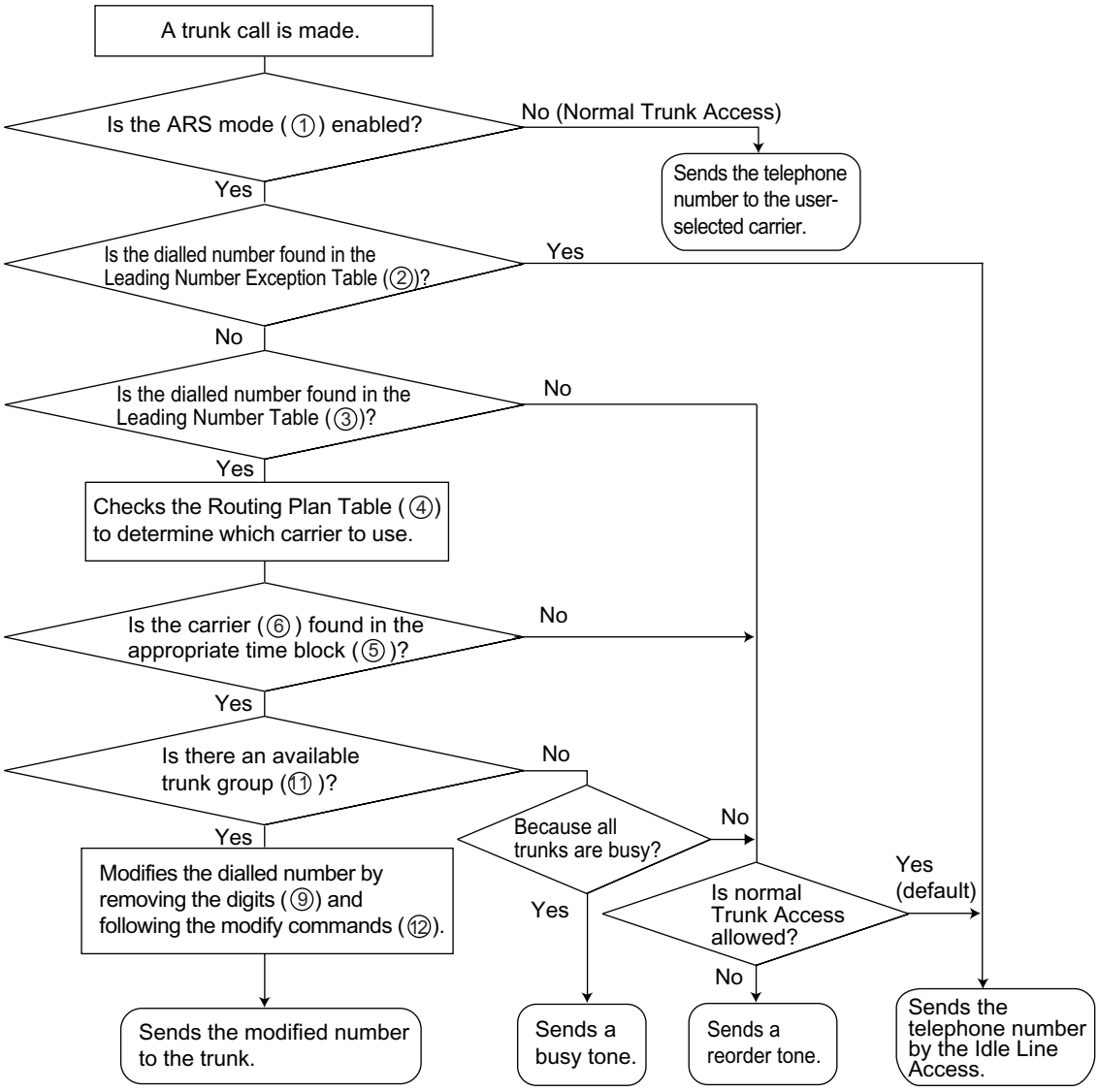

[Programming Procedures]

1. ARS Mode ① Assignment

It is possible to select whether ARS operates when an extension user makes a call using any Idle Line Access method or when an extension user makes a call using any Trunk Access method. (→ 1.5.5.3 Trunk Access)
→ 2.14.1 [8-1] System Settings—ARS Mode
→ [320] ARS Mode

2. Leading Number Exception Table ② Assignment

Store the telephone numbers that will avoid using the ARS feature.
→ 2.14.7 [8-6] Leading Number Exception
→ [325] ARS Exception Number

② ARS Leading Number Exception Table

Location No.	Leading No. Exception
001	033555
002	06456
:	:

3. Leading Number Table ③ Assignment

Store the area codes and/or telephone numbers as leading number that will be routed by the ARS feature. In this table, the Routing Plan (refer to "4. Routing Plan Table ④ Assignment") is selected for each number.
The additional (remain) number of digits must be assigned only when "#", for example, is needed after a dialled number. The "#" is added after the assigned number of digits of dialled number (excluding a leading number).
→ 2.14.2 [8-2] Leading Number—Leading Number
→ [321] ARS Leading Number
→ 2.14.2 [8-2] Leading Number—Additional Number of Digits
→ 2.14.2 [8-2] Leading Number—Routing Plan Number
→ [322] ARS Routing Plan Table Number

③ ARS Leading Number Table

Location No.	Leading No.	Additional (Remain) No. of Digits	Routing Plan Table No.
0001	039	7	1
0002	03	0	4
0003	0444	5	5
:	:	:	:

If a dialled number matches a leading number, the number will be modified according to the corresponding Routing Plan Table and the modified number will be sent to the trunk when the assigned additional (remain) number of digits are dialled.
If a dialled number matches multiple leading number entries, the leading number entry with the lowest numbered location will have priority.

[Example]

Dialled Number	Corresponding Routing Plan Table No.	Description
039-123-4567	1	"039" is found in location 0001 and seven digits (assigned additional [remain] number of digits in location 0001) were dialled. The Routing Plan Table 1 is selected just after the seventh digit.
039-654-321	1	"039" is found in location 0001 and the Inter-digit time expired before the seventh digit is received. The Routing Plan Table 1 is selected after the Inter-digit time expired. →2.8.4 [2-3] Timers & Counters—Dial / IRNA / Recall / Tone—Dial—Extension Inter-digit
038	4	"03" is found in two locations (locations 0001 and 0002), so the PBX waits for the next digit "8". "038" is not found in any location, then "03" (location 0002) is selected. The Routing Plan Table 4 is selected.

4. Routing Plan Table ④ Assignment

Arrange the time schedule as desired and store the carrier priority.

Time Table ⑤

As the best carrier may vary with the day of the week and the time of day, four time blocks (Time-A through D) can be programmed for each day of the week.
→ 2.14.4 [8-3] Routing Plan Time—Time Setting
→ [330] ARS Routing Plan Time Table

Carrier Priority ⑥

Assign the appropriate carrier (refer to "5. Carrier Table ⑦ Assignment") and their priority in each time block. The carrier is selected in the entry order (the order in which entries are listed).
→ 2.14.5 [8-4] Routing Plan Priority
→ [331–346] ARS Routing Plan Table (1–16) (KX-TDA30/KX-TDA100/KX-TDA200 only)

③ ARS Leading Number Table

Location No.	Leading No.	Additional (Remain) No. of Digits	Routing Plan Table No.
0001	03	8	1
:	:	:	:

④ ARS Routing Plan Table

Routing Plan Table 1					
⑤ Time Table			⑥ Carrier		
			Priority 1	Priority 2	...
SUN	Time-A	9:00	1 (A telecom)	4 (D telecom)	···
	Time-B	12:00	1 (A telecom)	2 (B telecom)	···
	Time-C	15:00	1 (A telecom)	2 (B telecom)	···
	Time-D	21:00	3 (C telecom)	1 (A telecom)	···
:	:	:	:	:	···
SAT	Time-A	9:00	3 (C telecom)	2 (B telecom)	···
	Time-B	12:00	3 (C telecom)	1 (A telecom)	···
	Time-C	15:00	3 (C telecom)	1 (A telecom)	···
	Time-D	21:00	3 (C telecom)	2 (B telecom)	···

5. Carrier Table ⑦ Assignment

A specified number of carriers can be programmed. Assign the following items for each Carrier Table:
→ 2.14.6 [8-5] Carrier—Carrier

Carrier Name ⑧: Assign the carrier name.
→ 2.14.6 [8-5] Carrier—Carrier—Carrier Name
→ [350] ARS Carrier Name

Removed Number of Digits ⑨: Assign the number of digits to remove from the beginning of the user-dialled number.
→ 2.14.6 [8-5] Carrier—Carrier—Removed Number of Digits
→ [352] ARS Removed Number of Digits for Carrier Access

Carrier Access Code ⑩: Assign the code to access the carrier.
→ 2.14.6 [8-5] Carrier—Carrier—Carrier Access Code
→ [353] ARS Carrier Access Code

Trunk Group ⑪**:** Assign the trunk groups which connect to each carrier.
→ 2.14.6 [8-5] Carrier—TRG 01–TRG 64 (KX-TDA30/KX-TDA100/KX-TDA200), or TRG 01–TRG 96 (KX-TDA600)
→ [351] ARS Trunk Group for Carrier Access

Modify Command ⑫**:** Assign the commands to modify the dialled number to access the carrier.
→ 2.14.6 [8-5] Carrier—Carrier—Modify Command

[Command Explanation]

Command	Description
Number	Add the number.
C	Add the Carrier Access code.
P	**Analogue Line:** Insert a pause. **ISDN/T1/E1 Line:** Insert a pause and change to tone (DTMF) signal.
A	Add the Authorisation code for a tenant (⑬).
G	Add the Authorisation code for a trunk group (⑭).
I	Add the Itemised Billing code (⑮).
H	Add the dialled number after the digits are removed (Home position).

[Programming Example]

⑦ Carrier Table	1	2	••
⑧ Carrier Name	A telecom	B telecom	··
⑨ Removed Number of Digits	6	0	··
⑩ Carrier Access Code	0077	0088	··
⑪ Trunk Group	1, 2, 3	1, 2	··
⑫ Modify Command	CH#12	CH	··

[Example]
Dialled number: 0123456789
(Trunk Access no. is ignored.)
Modification:

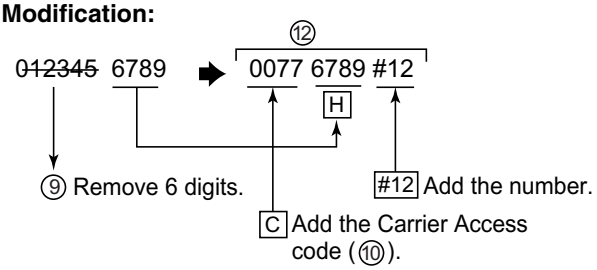

6. Optional Assignment

Authorisation Code for a Tenant ⑬
An Authorisation code can be assigned for each carrier and each tenant.
→ 2.14.6 [8-5] Carrier—Authorisation Code for Tenant

Authorisation Code for a Trunk Group ⑭
An Authorisation code can be assigned for each trunk group and each carrier.
→ 2.14.8 [8-7] Authorisation Code for TRG

Itemised Billing Code ⑮
An Itemised Billing code can be assigned for each extension and for each verification code.
If a call is not made from an extension (e.g., DISA or TIE) and no verification code is used, the Itemised Billing code assigned in the location 1 of the verification code will be used.
→ 2.10.1 [4-1-1] Wired Extension—Extension Settings—Option 2—ARS Itemised Code
→ 2.10.10 [4-2-1] Portable Station—Extension Settings—Option 2—ARS Itemised Code
→ 2.12.3 [6-3] Verification Code—Itemised Billing Code for ARS

Conditions

WARNING
The software contained in the ARS feature to allow user access to the network must be upgraded to recognise newly established network area codes and exchange codes as they are placed into service.
Failure to upgrade the on-premise PBXs or peripheral equipment to recognise the new codes as they are established will restrict the customer and users of the PBX from gaining access to the network and to these codes.
KEEP THE SOFTWARE UP TO DATE WITH THE LATEST DATA.

- **Dialled Number on SMDR**
  It is possible to choose to print either the user-dialled number or the modified number on SMDR through system programming. (→ 1.26.1 Station Message Detail Recording (SMDR))
  → 2.17.1 [11-1] Main—SMDR—SMDR Options—ARS Dial

- **ARS Data Download/Upload**
  It is possible to download or upload the following ARS data to the PBX using PC programming:
  – ② ARS Leading Number Exception Table
  – ③ ARS Leading Number Table
  – ④ ARS Routing Plan Table
  → 2.4.8 Tool—Import
  → 2.4.9 Tool—Export

  This is useful when a carrier has changed the call charge, and the updated data can be used for multiple customers.
- A TRS/Barring check is done before ARS is applied. (→ 1.9.1 Toll Restriction (TRS)/Call Barring (Barring))

Programming Manual References

PC Programming Manual

2.4.8 Tool—Import
→ARS - Leading Digit
→ARS - Except Code
→ARS - Routing Plan
2.4.9 Tool—Export
2.8.4 [2-3] Timers & Counters—Dial / IRNA / Recall / Tone—Dial—Extension Inter-digit
2.8.17 [2-9] System Options—Option 3—Dial Tone—Dial Tone for ARS
2.10.1 [4-1-1] Wired Extension—Extension Settings—Option 2—ARS Itemised Code
2.10.10 [4-2-1] Portable Station—Extension Settings—Option 2—ARS Itemised Code
2.12.3 [6-3] Verification Code—Itemised Billing Code for ARS
2.14 [8] ARS
2.17.1 [11-1] Main—SMDR—SMDR Options—ARS Dial

PT Programming Manual

[320] ARS Mode
[321] ARS Leading Number
[322] ARS Routing Plan Table Number
[325] ARS Exception Number
[330] ARS Routing Plan Time Table
[331–346] ARS Routing Plan Table (1–16) (KX-TDA30/KX-TDA100/KX-TDA200 only)
[347] ARS Routing Plan Table (1–48) (KX-TDA600 only)
[350] ARS Carrier Name
[351] ARS Trunk Group for Carrier Access
[352] ARS Removed Number of Digits for Carrier Access
[353] ARS Carrier Access Code

Feature Guide References

3.1 Capacity of System Resources

1.11 Conversation Features

1.11.1 Hands-free Operation

Description

A PT user can talk to another party without lifting the handset. Pressing specific buttons (e.g., REDIAL) automatically activates hands-free mode.

Conditions

- **PTs with the MONITOR Button**
  PTs with the MONITOR button can only dial in hands-free mode and cannot be used for hands-free conversations.

Programming Manual References

PC Programming Manual

2.8.4 [2-3] Timers & Counters—Dial / IRNA / Recall / Tone—Tone Length—Reorder Tone for PT Hands-free

2.10.1 [4-1-1] Wired Extension—Extension Settings—Option 4—LCS Answer Mode

PT Programming Manual

None

1.11.2 Off-hook Monitor

Description

A PT user can let others listen to the user's conversation through the built-in speaker, during a conversation using the handset.

Conditions

- **Capable Telephone**
  KX-T7400 series and KX-T7500 series display PTs, KX-T7600 series telephones, and IP-PTs.
  To enable this feature, system programming is required. If disabled, hands-free conversation is performed instead.

Programming Manual References

PC Programming Manual

2.8.17 [2-9] System Options—Option 1—PT Operation—Off Hook Monitor for KX-T74xx/T75xx/T76xx/IP-PTs

PT Programming Manual

None

User Manual References

1.4.7 Letting Other People Listen to the Conversation (Off-hook Monitor)

1.11.3 Mute

Description

During a conversation, a PT user can disable the speaker microphone or the handset microphone to consult privately with others while listening to the other party on the phone through the built-in speaker or the handset receiver. The user can hear the other party's voice during Mute, but cannot be heard.

Conditions

- This feature is available with all PTs that have the AUTO ANS/MUTE button.

User Manual References

1.4.6 Mute

1.11.4 Headset Operation

Description

This PBX allows the use of headset-compatible PTs. A PT user can talk to another party without lifting the handset.
For connection and operation, refer to the Operating Instructions for the headset.

This feature is also known as Handset/Headset Selection.

Conditions

- **Hardware Requirement:** An optional headset.
- If headset mode is on, pressing the SP-PHONE button activates the headset, not the built-in speaker.
- To set headset mode on a DPT, use personal programming (Headset Operation) or press the Headset button. To set headset mode on an APT, use the handset/headset selector provided on the set and/or on the headset.
- **Headset Button**
  A flexible button on a DPT can be customised as a Headset button. It is possible to assign a Headset button to a flexible button on an APT, but the button will not function.
- **Answer/Release Button**
  A flexible button can be customised as an Answer button or a Release button. Such buttons are useful for headset operation. It is possible to answer an incoming call by pressing an Answer button. While hearing the Call Waiting tone during a conversation, pressing an Answer button enables one to answer the second call by placing the current call on hold. Pressing a Release button enables one to disconnect the line during or after conversation, or to complete a Call Transfer.
- It is possible to switch from headset mode to hands-free mode or vice versa during a conversation by pressing the Headset button.
- Headset users cannot use the following features:
  – Automatic Redial (→ 1.6.1.4 Last Number Redial)
  – Receiving OHCA (→ 1.8.4.3 Off-hook Call Announcement (OHCA))
  – Receiving Whisper OHCA (→ 1.8.4.4 Whisper OHCA)

Programming Manual References

PC Programming Manual

2.7.5 [1-1] Slot—Extension Port—Headset OFF/ON (for DPT, DPT(S-DPT), S-Hybrid, or S-Hybrid(S-DPT) port)

2.7.38 [1-1] Slot—IP-Extension Port (KX-TDA100/KX-TDA200/KX-TDA600 only)—IP-PT Registration and De-registration—Headset OFF/ON

2.10.5 [4-1-4] Wired Extension—Flexible Button—Type

2.10.17 [4-3] DSS Console—Flexible Button—Type

PT Programming Manual

None

Feature Guide References

1.20.2 Flexible Buttons

User Manual References

1.3.5 Using the ANSWER/RELEASE Button
1.4.8 Using the Headset (Headset Operation)
3.1.2 Settings on the Programming Mode

1.11.5 Data Line Security

Description

Setting Data Line Security at an extension protects communications between the extension and the other party from being interrupted by signals such as Call Waiting, Hold Recall and Executive Busy Override. An extension that is using a connected data device (e.g., a fax machine) can set this feature to maintain secure data transmission by preventing tones or interruptions from other extensions during communication.

Programming Manual References

PC Programming Manual

2.8.8 [2-6-1] Numbering Plan—Main—Features—Data Line Security Set / Cancel

2.10.1 [4-1-1] Wired Extension—Extension Settings—Option 2—Data Mode

PT Programming Manual

None

User Manual References

1.8.9 Protecting Your Line against Notification Tones (Data Line Security)

1.11.6 Flash/Recall/Terminate

Description

The FLASH/RECALL button (Flash/Recall mode or Terminate mode) or Terminate button (Terminate mode) is used when a PT user disconnects the current call and originates another call without hanging up first. It performs the same function as going on-hook and then going off-hook.
[Explanation of Each Mode]
Flash/Recall Mode: Disconnects the line. The extension user hears the dial tone from the line used last. For example, if a trunk call is disconnected, the extension user will hear a new dial tone from the telephone company.
Terminate Mode: Disconnects the line. The extension user hears the dial tone determined by the Line Preference—Outgoing setting. (→ 1.5.5.2 Line Preference—Outgoing)

Conditions

- **FLASH/RECALL Button Mode**
  One of the following modes can be selected for each extension through system programming:
  – Flash/Recall mode
  – Terminate mode
  – External Feature Access (EFA) mode. (→ 1.11.7 External Feature Access (EFA))
- **Terminate Button**
  A flexible button can be customised as the Terminate button.
- **Disconnect Time (Only for Flash/Recall Mode)**
  The amount of time between successive accesses to the same trunk is programmable for each trunk port.
- This feature outputs an SMDR call record (→ 1.26.1 Station Message Detail Recording (SMDR)), restarts the call timer, inserts the automatic pause, and checks the TRS/Barring level (→ 1.9.1 Toll Restriction (TRS)/Call Barring (Barring)) again.
- The Terminate feature will be performed when pressing the FLASH/RECALL button regardless of the mode that the FLASH/RECALL button has been set to, in the following situations:
  – When a call is made using ARS. (→ 1.10.1 Automatic Route Selection (ARS))
  – When a trunk call is made with the INTERCOM button.
  – When a trunk call is made with an ICD group button.

Programming Manual References

PC Programming Manual

2.7.11 [1-1] Slot—LCO Port—Disconnect Time
2.7.19 [1-1] Slot—T1 Port (KX-TDA100/KX-TDA200/KX-TDA600 only)—Disconnect Time
2.7.25 [1-1] Slot—E1 Port—Disconnect Time
2.7.28 [1-1] Slot—E&M Port (KX-TDA100/KX-TDA200/KX-TDA600 only)—Disconnect Time
2.7.31 [1-1] Slot—DID Port—Disconnect Time
2.10.1 [4-1-1] Wired Extension—Extension Settings—Option 6—Flash Mode during CO Conversation
2.10.5 [4-1-4] Wired Extension—Flexible Button—Type
2.10.10 [4-2-1] Portable Station—Extension Settings—Option 6—Flash Mode during CO Conversation
2.10.13 [4-2-3] Portable Station—Flexible Button—Type
2.10.17 [4-3] DSS Console—Flexible Button—Type

PT Programming Manual

[418] LCOT Disconnect Time

Feature Guide References

1.20.2 Flexible Buttons

1.11.7 External Feature Access (EFA)

Description

Normally, an extension user can only access features within the PBX. However, when performing External Feature Access (EFA) the extension user performs features outside of the PBX, such as using the transfer services of the telephone company or host PBX. When EFA is performed, the PBX sends a flash/recall signal to the telephone company or the host PBX (→ 1.5.4.8 Host PBX Access Code (Access Code to the Telephone Company from a Host PBX)).
This feature is only available on trunk calls.
This feature is performed by pressing the EFA button or the FLASH/RECALL button that is set to EFA mode (→ 1.11.6 Flash/Recall/Terminate).

Conditions

- **Flash/Recall Time**
  The Flash/Recall time can be assigned for each trunk port.
- **EFA Button**
  A flexible button can be customised as the EFA button.
- It is possible to perform this feature by entering the feature number while the current call is placed on Consultation Hold (e.g., is going to be transferred to an extension of the host PBX).
  Consultation Hold: a condition that a party is in, when an extension is calling other parties in order to perform Call Transfer, Conference, or Call Splitting.
  In Consultation Hold, the original call is treated as if it is on hold, allowing the extension to call a third party all on one line. In Call Hold, the party on hold and the third party are connected to the extension using separate lines.

Programming Manual References

PC Programming Manual

2.7.11 [1-1] Slot—LCO Port—Flash Time
2.7.19 [1-1] Slot—T1 Port (KX-TDA100/KX-TDA200/KX-TDA600 only)—Flash Time
2.7.25 [1-1] Slot—E1 Port—Flash Time
2.7.28 [1-1] Slot—E&M Port (KX-TDA100/KX-TDA200/KX-TDA600 only)—Flash Time
2.7.31 [1-1] Slot—DID Port—Flash Time
2.8.8 [2-6-1] Numbering Plan—Main—Features—External Feature Access
2.10.1 [4-1-1] Wired Extension—Extension Settings—Option 6—Flash Mode during CO Conversation
2.10.5 [4-1-4] Wired Extension—Flexible Button—Type
2.10.10 [4-2-1] Portable Station—Extension Settings—Option 6—Flash Mode during CO Conversation
2.10.13 [4-2-3] Portable Station—Flexible Button—Type
2.10.17 [4-3] DSS Console—Flexible Button—Type
2.13.5 [7-5] Miscellaneous—TRS Check after EFA

PT Programming Manual

[417] LCOT Flash/Recall Time

Feature Guide References

1.20.2 Flexible Buttons

User Manual References

1.10.4 If a Host PBX is Connected

1.11.8 Trunk Call Limitation

Description

Trunk calls are limited by the following features:

Feature	Description
Extension-to-Trunk Call Duration	If a call between an extension user and an outside party is established, the call duration can be restricted by a system timer selected for each trunk group. Both parties will hear warning tones at five-second intervals starting 15 seconds before the time limit. When the time limit expires, the line will be disconnected. COS programming determines whether this feature is enabled or disabled. Whether this feature applies to outgoing calls only, or to both outgoing and incoming calls is determined through system programming.
Trunk-to-Trunk Call (except Unattended Conference Call) Duration	If a call between two outside parties is established, the call duration can be restricted by a system timer selected for each trunk group. Both parties will hear warning tones at five-second intervals starting 15 seconds before the time limit. When the time limit expires, the line will be disconnected. If both parties involved in the trunk-to trunk call were established by an extension (e.g., an extension makes a trunk call, then transfers the call to an outside party), the time limit applied to the trunk call that was made first will be used.
Budget Management	When the preprogrammed call charge limit has been reached, an extension user will hear 3 warning tones at five-second intervals. It is programmable whether the line is disconnected after the third tone. After the call has ended, the extension user cannot make further trunk calls until the charge limit has been increased or cleared by an extension assigned as a manager (→ 1.9.2 Budget Management).
Dialling Digit Restriction during Conversation	While engaged in an incoming trunk call, the dialling of digits can be restricted. If the number of dialled digits exceeds the limitation, the line will be disconnected.

Conditions

- During an Unattended Conference Call, the Unattended Conference Recall time is applied. (→ 1.14.1.2 Conference)
- When using LCO trunks that do not support Calling Party Control (CPC) signal detection (→ 1.11.10 Calling Party Control (CPC) Signal Detection), the Trunk-to-Trunk Call Duration timer should not be disabled, as automatic end of call detection cannot be performed.
  → [473] Trunk-to-Trunk Call Duration

Programming Manual References

PC Programming Manual

2.8.11 [2-7-1] Class of Service—COS Settings—TRS—Extension-CO Line Call Duration Limit

2.8.17 [2-9] System Options—Option 2—Extension - CO Call Limitation—For Incoming Call

2.9.1 [3-1-1] Trunk Group—TRG Settings—Main

→CO-CO Duration Time

→Extension-CO Duration Time

2.13.5 [7-5] Miscellaneous—Dial Digits Limitation After Answering—Dial Digits

PT Programming Manual

[472] Extension-to-Trunk Call Duration

[473] Trunk-to-Trunk Call Duration

[502] Trunk Call Duration Limitation

Feature Guide References

2.2.1 Class of Service (COS)

1.11.9 Parallelled Telephone

Description

Multiple telephones can be connected to the same port. This is useful to increase the number of telephones without additional extension cards. The combinations and features of the parallelled telephones are described below.

Features	Descriptions	Connections
Parallel Mode	Parallel mode involves the connection of an SLT to an APT or a DPT that is connected to a Super Hybrid port. When parallel mode is enabled, the two telephones function as follows: • Both share the extension number of the telephone connected directly to the PBX (main telephone). • Either telephone can make or answer a call.	**APT/DPT + SLT** 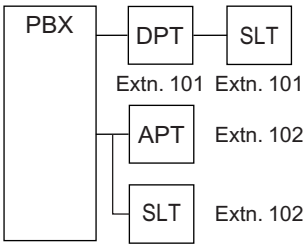
EXtra Device Port (XDP) Mode	XDP mode involves the connection of an SLT to a DPT that is connected to a Super Hybrid port. Unlike parallel mode, each telephone can act as a completely different extension with its own extension number. (→ 2.1.1 Extension Port Configuration)	**DPT + SLT** 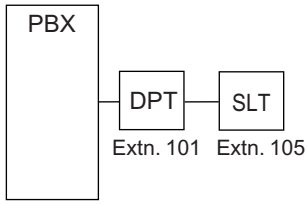
Digital XDP	Digital XDP involves the connection of a DPT to a DPT that is connected to a DPT port or Super Hybrid port. The DPT that is connected directly to the PBX is called the “master DPT”, and the DPT connected to the master DPT is called the “slave DPT”. Like XDP mode, each telephone can act as a completely different extension with its own extension number. If a master DPT is connected to the PBX by a Super Hybrid port (not a DPT port), a third telephone (SLT) can also be in parallel or XDP mode with the master DPT. Digital XDP connection allows the number of DPTs that the PBX supports to increase.	**DPT + DPT** 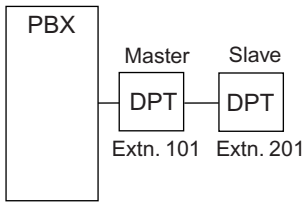 **DPT + DPT + SLT** 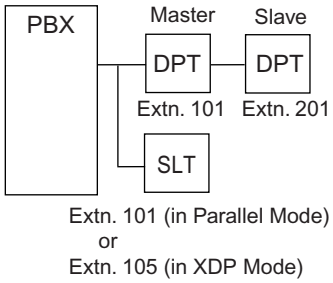

Features	Descriptions	Connections
Wireless XDP Parallel Mode	For this connection, refer to 1.25.5 Wireless XDP Parallel Mode.	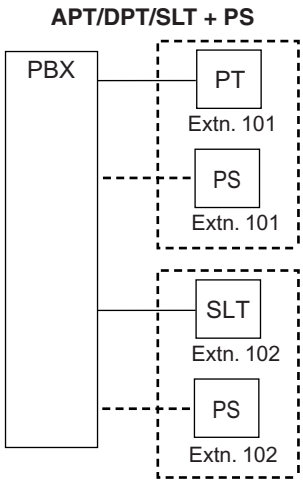

Conditions

[APT + SLT]

- If one telephone goes off-hook while the other is on a call, a three-party call is established. If one user goes on-hook, the other user continues the call.
- An extension user cannot originate a call from the SLT if the APT is:
  – playing background music (BGM)
  – receiving a paging announcement over the built-in speaker.
- **For users in Germany and Austria only**
  Although the APT will ring for incoming calls, the SLT will not ring.
  For users in other countries/areas
  Both the APT and the SLT will ring for incoming calls, and the PBX cannot refuse calls arriving at the SLT.

[DPT + SLT]

- It is programmable whether to have the DPT and SLT in either parallel or XDP mode. Regardless of the mode, the SLT can be connected directly to the XDP port of the DPT or to a modular T-adapter with the DPT.
- When in parallel mode, it is programmable whether the SLT rings for incoming calls.

  Ring on: Both telephones ring except when the PT is in Hands-free Answerback mode (→ 1.4.1.4 Hands-free Answerback) or voice-calling mode (Alternate Receiving Ring/Voice) (→ 1.5.3 Intercom Call).

  Ring off: Only the PT rings. However, the SLT can answer the call.
- Both telephones cannot engage in calls simultaneously. If one telephone goes off-hook while the other is on a call, the call is switched to the former. The call is not switched in the following cases:

  a) While being monitored by another extension. (→ 1.5.3 Intercom Call)

  b) While receiving OHCA (→ 1.8.4.3 Off-hook Call Announcement (OHCA)) or Whisper OHCA. (→ 1.8.4.4 Whisper OHCA)

  c) During a Conference call (→ 1.14.1 Conference Features).

  d) While Live Call Screening (LCS) or Two-way Record is activated (→ 1.24.3 Voice Mail DPT (Digital) Integration).

[DPT + DPT]

- **Capable Telephones**
  KX-T7600 series, except KX-T7640. Note that the KX-T7667 can only be connected as a slave DPT.
- When Digital XDP connection enables the number of DPTs to exceed the maximum capacity that the PBX supports, the following conditions must be met:
  – KX-TDA30: An MEC card is installed and an additional AC adaptor is connected
  – KX-TDA100/KX-TDA200: An MEC card and the PSU-M or PSU-L is installed
  – KX-TDA600: The PSU-L is installed.
- When using Digital XDP connection, the following features cannot be used with either the master or slave DPT:
  a) OHCA: A call waiting tone will be heard even if the OHCA feature is set.
  b) USB Module: The DPTs will not work correctly if a USB Module is connected. Do not connect USB Modules to the DPTs.

Note

Even if the slave DPT is disconnected, the OHCA feature and USB Module still cannot be used with the master DPT. To use them, the master DPT must be disconnected from the PBX, and then reconnected.

[DPT + DPT + SLT]

- When an SLT is connected to the slave DPT in parallel mode, the SLT works as the parallel extension of the master DPT.

Installation Manual References

KX-TDA30

1.4.3 System Capacity
2.5.7 MEC Card (KX-TDA3105)
2.6.2 Parallel Connection of the Extensions
2.6.3 Digital EXtra Device Port (Digital XDP) Connection

KX-TDA100/KX-TDA200

1.4.3 System Capacity
2.3.2 MEC Card (KX-TDA0105)
2.7.2 Parallel Connection of the Extensions
2.7.3 Digital EXtra Device Port (Digital XDP) Connection

KX-TDA600

1.4.3 System Capacity
2.9.2 Parallel Connection of the Extensions
2.9.3 Digital EXtra Device Port (Digital XDP) Connection

Programming Manual References

PC Programming Manual

2.7.5 [1-1] Slot—Extension Port
→XDP Mode (for S-Hybrid port)
→Parallel Telephone Ringing (for S-Hybrid port)
2.8.8 [2-6-1] Numbering Plan—Main—Features—Parallel Telephone (Ring) Mode Set / Cancel

PT Programming Manual

[600] EXtra Device Port (XDP) Mode

User Manual References

1.8.11 Setting the Parallelled Telephone to Ring (Parallelled Telephone)

1.11.10 Calling Party Control (CPC) Signal Detection

Description

The Calling Party Control (CPC) signal is an on-hook indication (disconnect signal) sent from the analogue trunk when the other party hangs up. To maintain efficient utilisation of trunks, the PBX monitors their state and when CPC signal is detected from a line, disconnects the line and alerts the extension with a reorder tone.

Conditions

- CPC signal detection is programmable for incoming trunk calls, and for outgoing trunk calls.
- If your telephone company sends other signals similar to CPC, it is recommended not to enable CPC signal detection on outgoing trunk calls.
- If a CPC signal is detected during a Conference call (→ 1.14.1.2 Conference), that line is disconnected, but the remaining parties stay connected.
- If a CPC signal is detected during a call between a caller using the DISA feature (→ 1.17.6 Direct Inward System Access (DISA)) and an extension or an outside party, the line is disconnected.

Programming Manual References

PC Programming Manual

2.7.11 [1-1] Slot—LCO Port—CPC Signal Detection Time—Outgoing, Incoming

2.7.19 [1-1] Slot—T1 Port (KX-TDA100/KX-TDA200/KX-TDA600 only)

→ CPC Detection (DDI/DID)—Outgoing, Incoming (for DDI/DID channel)

→ CPC Detection (LCO/GCO)—Outgoing, Incoming (for GCOT or LCOT channel)

2.7.25 [1-1] Slot—E1 Port—CPC Detection Time—Out, In

2.7.31 [1-1] Slot—DID Port—CPC Detection Time—Out (DID), In (DID)

PT Programming Manual

[413] LCOT CPC Signal Detection Time—Outgoing

[414] LCOT CPC Signal Detection Time—Incoming

1.12 Transferring Features

1.12.1 Call Transfer

Description

An extension user can transfer a call to another extension or an outside party. The following features are available:

Feature	Transferring method
With Announcement	Transfer is completed after announcing the destination party.
Without Announcement	Transfer is completed without an announcement. After dialling the destination, while hearing a ringback tone, the originator can replace the handset.

Call Transfer with Announcement is also known as Call Transfer—Screened.

Call Transfer without Announcement is also known as Call Transfer—Unscreened.

Conditions

- When an extension is transferring a party to another destination, the party will be in consultation hold until they reach the transfer destination.
  Consultation Hold: a condition that a party is in, when an extension is calling other parties in order to perform Call Transfer, Conference, or Call Splitting.
  In Consultation Hold, the original call is treated as if it is on hold, allowing the extension to call a third party all on one line. In Call Hold, the party on hold and the third party are connected to the extension using separate lines.
- If Music on Hold is enabled, music can be sent to the held party while the call is transferred. (→ 1.13.4 Music on Hold) It is programmable whether a ringback tone or music is sent.
- If the transfer destination extension has set FWD to an outside party, the call will be transferred to the outside party. (→ 1.3.1.2 Call Forwarding (FWD))
- COS programming determines the extensions that are able to transfer a call to an outside party. COS can also prohibit transferring to an extension of another PBX via the TIE line service using the PBX Code method (Access with PBX Code) (→ 1.30.1 TIE Line Service).
- **Transfer Recall for Call Transfer without Announcement**
  If the transfer destination does not answer within the preprogrammed Transfer Recall time, the call will be redirected to the Transfer Recall destination assigned to the extension which transferred the call. If the destination is not assigned, the call will return to the extension.
  [Available destination]

Destination	Availability
Wired Extension (PT/SLT/ISDN Extension/T1-OPX)	✔
PS	✔
Incoming Call Distribution Group	✔
PS Ring Group	
Floating Extension no. for SVM	

Destination	Availability
VM Group (DTMF/DPT)	
External Pager (TAFAS)	
DISA	
Analogue/ISDN Remote Maintenance	
Idle Line Access no. + Phone no.	
Trunk Group Access no. + Trunk Group no. + Phone no.	
Other PBX Extension (TIE with no PBX Code)	
Other PBX Extension (TIE with PBX Code)	

- **One-touch Transfer**
  One-touch Transfer can be performed by pressing a One-touch Dialling button that has been assigned the TRANSFER command and the telephone number of the transfer destination. This is useful for transferring calls to an outside destination. (→1.6.1 Memory Dialling Features)
- **Automatic Transfer by SDN Button or DSS Button**
  Pressing an SDN button or DSS button during a conversation with an extension or outside party can automatically transfer the call to the specified destination (→ 1.7.1 Primary Directory Number (PDN)/ Secondary Directory Number (SDN) Extension). It is possible through system programming to prevent this feature from operating for extension to extension calls.
- When transferring a call from an analogue trunk, users are strongly recommended to perform a screened transfer, so that the outside caller is not automatically connected to an extension using Hands-free Answerback when the extension user is absent.

Programming Manual References

PC Programming Manual

2.8.3 [2-2] Operator & BGM—BGM and Music on Hold—Sound on Transfer

2.8.4 [2-3] Timers & Counters—Dial / IRNA / Recall / Tone—Recall—Transfer Recall

2.8.11 [2-7-1] Class of Service—COS Settings—TRS—Transfer to CO

2.8.17 [2-9] System Options—Option 4

→ DSS Key—Automatic Transfer for Extension Call

→ Transfer—Transfer to Busy Extension without BSS Operation

2.10.1 [4-1-1] Wired Extension—Extension Settings—Option 1—Transfer Recall Destination

2.10.10 [4-2-1] Portable Station—Extension Settings—Option 1—Transfer Recall Destination

PT Programming Manual

[201] Transfer Recall Time

[503] Call Transfer to Trunk

[712] Music for Transfer

Feature Guide References

2.2.1 Class of Service (COS)

User Manual References

1.4.1 Transferring a Call (Call Transfer)

1.13 Holding Features

1.13.1 Call Hold

Description

An extension user can put a call on hold. The following features are available depending on the result.

Feature	Description
Call Hold General	Any extension can retrieve a held call.
Exclusive Call Hold	Only the extension user who held the call can retrieve it.

The result of the holding operation can be determined through system programming. Pressing the HOLD button again just after the first time alternates the mode between General and Exclusive Call Hold.

Conditions

- **Call Hold Limitation**
  A PT user can hold one intercom call and/or multiple trunk calls at a time. An SLT user can hold either one intercom call or one trunk call at a time. By using the Call Park feature, PT and SLT users can hold multiple trunk calls and intercom calls simultaneously. (→ 1.13.2 Call Park)
- **Music on Hold**
  Music, if available, is sent to the held party. (→ 1.13.4 Music on Hold)
- **Hold Recall**
  If a call on hold is not retrieved within a preprogrammed time period, Hold Recall is heard at the extension which put the call on hold. If the extension is engaged in a call, the Hold Alarm will be heard.
- If an outside party is placed on hold and not retrieved within a preprogrammed time period, the call is automatically disconnected. This timer starts when Hold Recall activates.
- **Automatic Call Hold**
  A PT user can be programmed holding of the current call when pressing another CO/ICD Group/ INTERCOM/PDN button, through system programming. If this feature is not enabled, the current call will be disconnected.
  [Example]
  It is possible to receive a call by pressing the flashing ICD Group button, this puts the current intercom call (on the INTERCOM button) on hold. To return to the held call, press the INTERCOM button.
- **Call Hold Retrieve Deny**
  If an extension user cannot call certain extensions on a COS basis (→ 1.1.2.2 Internal Call Block), he cannot retrieve the held call which the extensions made.

- **SLT Hold Mode**
  It is possible to choose how to hold a line and transfer a call with an SLT in the following methods through system programming:

	Hold	Hold (to be Retrieved from Another Extension)*	Transfer to Trunk	Transfer to Extension
Mode 1	Flashing the hookswitch + Going on-hook	Flashing the hookswitch + Hold Feature No. + Going on-hook	Flashing the hookswitch + Trunk Access No.	Flashing the hookswitch + Extension No.
Mode 2 (Default)	Flashing the hookswitch + Hold Feature No. + Going on-hook	Flashing the hookswitch + Hold Feature No. + Going on-hook	Flashing the hookswitch + Trunk Access No.	Flashing the hookswitch + Extension No.
Mode 3	Flashing the hookswitch + Hold Feature No. + Going on-hook	Flashing the hookswitch + Hold Feature No. + Hold Feature No. + Going on-hook	Flashing the hookswitch + Hold Feature No. + Trunk Access No.	Flashing the hookswitch + Extension No.
Mode 4	Flashing the hookswitch + Hold Feature No. + Going on-hook	Flashing the hookswitch + Hold Feature No. + Hold Feature No. + Going on-hook	Flashing the hookswitch + Hold Feature No. + Trunk Access No.	Flashing the hookswitch + Hold Feature No. + Extension No.

*: These operations must be performed when the held call is intended to be retrieved from another extension using the holding extension number.

If the following occurs frequently with an SLT, choose "**Mode 2**", "**Mode 3**", or "**Mode 4**":

a) When an SLT user receives a call, reorder tone is heard or nobody answers the call.

b) When an SLT user goes off-hook, reorder tone is heard instead of a dial tone.

If a call is not terminated after going on-hook, the above cases occur. To avoid these problems, choose "**Mode 2**", "**Mode 3**", or "**Mode 4**". Every call will be terminated unless the Hold feature number is entered after flashing the hookswitch in Mode 2, Mode 3, and Mode 4.

- Hold Alarm tone pattern has a default. (→ 3.3.1 Tones/Ring Tones).

Programming Manual References

PC Programming Manual

2.8.4 [2-3] Timers & Counters—Dial / IRNA / Recall / Tone

→ Recall—Hold Recall

→ Recall—Disconnect after Recall

2.8.8 [2-6-1] Numbering Plan—Main—Features

→ Call Hold / Call Hold Retrieve

→ Call Hold Retrieve : Specified with a Holding Extension Number

→ Hold Retrieve : Specified with a Held CO Line Number

2.8.17 [2-9] System Options

→ Option 1—PT Operation—Automatic Hold by ICM / CO / ICD Group key

→ Option 1—PT Operation—Hold Key Mode

→ Option 5—SLT—SLT Hold Mode

PT Programming Manual

[200] Hold Recall Time

User Manual References

1.4.2 Holding a Call

1.13.2 Call Park

Description

An extension user can place a call into a common parking zone of the PBX. The Call Park feature can be used as a transferring feature; this releases the user from the parked call to perform other operations. The parked call can be retrieved by any extension user.

Conditions

- **Automatic Call Park**
  It is possible to select an idle parking zone automatically.
- **Retry**
  If the specified parking zone is occupied or there is no vacant zone for Automatic Call Park, the originator will hear a busy tone. Retrying is possible while hearing the busy tone by selecting parking zone or a vacant zone.
- **Call Park Recall**
  If a parked call is not retrieved within a preprogrammed time period, Call Park Recall will be heard at the Transfer Recall destination assigned to the extension which parked the call. If the destination is engaged in a call, the Hold Alarm will be heard.
- If a parked trunk call is not retrieved within a preprogrammed time period (Default: 30 minutes), it is automatically disconnected.
- **Call Park Button**
  Pressing the Call Park button parks or retrieves a call in a preset parking zone.
  A flexible button can be customised as the Call Park button. It shows the current status of the preset parking zone as follows:

Light pattern	Status
Slow red flashing	Parked in the preset parking zone
Off	No parked call

- **Call Park (Automatic Park Zone) Button**
  Pressing the Call Park (Automatic Park Zone) button parks a call in an idle parking zone automatically.
  A flexible button can be customised as the Call Park (Automatic Park Zone) button.
- **Call Park Retrieve Deny**
  If an extension user cannot call certain extensions on a COS basis (→ 1.1.2.2 Internal Call Block), he cannot retrieve the parked call which the extensions made.

Programming Manual References

PC Programming Manual

2.8.4 [2-3] Timers & Counters
→ Recall—Call Park Recall
→ Recall—Disconnect after Recall

2.8.8 [2-6-1] Numbering Plan—Main—Features—Call Park / Call Park Retrieve

2.10.5 [4-1-4] Wired Extension—Flexible Button
→ Type
→ Parameter Selection (for Call Park)
→ Optional Parameter (Ringing Tone Type Number) (for Call Park)

2.10.13 [4-2-3] Portable Station—Flexible Button
→ Type
→ Parameter Selection (for Call Park)
→ Optional Parameter (or Ringing Tone Type Number) (for Call Park)
2.10.17 [4-3] DSS Console—Flexible Button
→ Type
→ Parameter Selection (for Call Park)
→ Optional Parameter (Ringing Tone Type Number) (for Call Park)

PT Programming Manual

None

Feature Guide References

1.20.2 Flexible Buttons
3.1 Capacity of System Resources

User Manual References

1.4.2 Holding a Call

1.13.3 Call Splitting

Description

During a conversation, an extension user can call another extension while putting the original party on Consultation Hold. The extension user can then alternate between the two parties and/or connect the original party with the third party.

Conditions

- **Consultation Hold:** a condition that a party is in, when an extension is calling other parties in order to perform Call Transfer, Conference, or Call Splitting.
  In Consultation Hold, the original call is treated as if it is on hold, allowing the extension to call a third party all on one line. In Call Hold, the party on hold and the third party are connected to the extension using separate lines.
- When the extension user is having a conversation with one party, the other party is in consultation hold.

User Manual References

1.4.3 Talking to Two Parties Alternately (Call Splitting)

1.13.4 Music on Hold

Description

Music can be played to a party that has been put on hold. The following music sources are available:

a) Internal music source

b) External music source

c) Cyclic tone

Music Source Assignment

[KX-TDA100/KX-TDA200/KX-TDA600]

BGM1, BGM2, and cyclic tone can be selected as Music on Hold through system programming. External music port 1 is assigned to BGM 1. It is possible to select whether external music port 2, internal music source 1, or internal music source 2 is assigned to BGM2.
Having two external music ports, for example, allows the use of the BGM feature (→1.17.4 Background Music (BGM)), while assigning a separate external music source (e.g., company message, advertisement) to Music on Hold.

[BGM Number and the Music Source]

BGM No.	Music Source
1	External music port 1
2	External music port 2, internal music source 1, or internal music source 2

Separate music sources can be assigned for the Music on Hold and the BGM features.

[KX-TDA30]

Only one external music port is available. If BGM is selected, it is possible to select whether external music port, internal music port 1, or internal music port 2 is assigned to BGM.

Conditions

- **Hardware Requirement:** User-supplied music source (when an external music source is assigned)
- **Volume Control**
  It is possible to change the volume of an internal and/or external music source.
- Each tenant can select a desired Music on Hold out of the available music sources. (→2.2.3 Tenant Service)

Installation Manual References

KX-TDA30

2.10.1 Connection of Peripherals

KX-TDA100/KX-TDA200

2.11.1 Connection of Peripherals

KX-TDA600

2.13.1 Connection of Peripherals

Programming Manual References

PC Programming Manual

2.8.3 [2-2] Operator & BGM

→ BGM and Music on Hold—Music Source of BGM2 (KX-TDA100/KX-TDA200/KX-TDA600 only)

→ BGM and Music on Hold—Music Source of BGM (KX-TDA30 only)

→ BGM and Music on Hold—Music on Hold

2.8.19 [2-11-1] Audio Gain (Paging/MOH)—Paging/MOH

→ MOH—MOH 1 (Music On Hold 1) (KX-TDA100/KX-TDA200/KX-TDA600 only)

→ MOH—MOH 2 (Music On Hold 2) (KX-TDA100/KX-TDA200/KX-TDA600 only)

→ MOH—MOH (Music On Hold) (KX-TDA30 only)

PT Programming Manual

[710] Music Source Selection for BGM (with the KX-TDA30)/BGM2 (with the KX-TDA100/KX-TDA200/KX-TDA600)

[711] Music on Hold

1.14 Conference Features

1.14.1 Conference Features

1.14.1.1 Conference Features—SUMMARY

Description

A conference call allows a conversation between three or more parties simultaneously. The following features are available to establish a conference call:

Feature	Description & Reference
Conference	During a two-party conversation, an extension user can add other parties to establish a conference call with up to eight parties. → 1.14.1.2 Conference
Executive Busy Override	An extension user can interrupt an existing call to establish a three-party conference call. → 1.8.2 Executive Busy Override
Privacy Release	During a conversation with an outside party on the S-CO button, a PT/PS user can allow another extension to join the conversation. → 1.14.1.3 Privacy Release

Conditions

- This PBX supports a maximum of 32 parties being engaged in simultaneous conference calls. (e.g., 4 eight-party conferences, 8 three-party conferences + 2 four-party conferences, 10 three-party conferences)

1.14.1.2 Conference

Description

An extension user can establish a conference call by adding additional parties to an already existing two-party conversation. This PBX supports three-party through eight-party conference calls. Conferences with more than four parties are only possible when a PT user originates the conference.

Unattended Conference:
The conference originator can leave the conference and allow other parties to continue. Establishing an Unattended Conference allows the originator to return to the conference. Unattended Conferences can only be established by PT users.

Conditions

- When an extension is establishing a conference call the original party is put on hold.
- **CONF (Conference) Button**
  For a PT which does not have the CONF button, a flexible button can be customised as the Conference button.
- **Unattended Conference Call Duration**
  The length of time that a conference call can remain unattended is restricted by the following timers:
  – Callback Start Timer
  – Warning Tone Start Timer
  – Disconnect Timer

  These timers behave and operate according to the following chain of events:
  1) When the unattended conference is established, the Callback Start Timer will begin.
  2) When the Callback Start timer expires, the Unattended Conference originator's extension will start to receive a callback ringing from the PBX and the Warning Tone Start Timer begins.
  3) When the Warning Tone Start Timer expires, the remaining parties of the conference will start to hear a warning tone, the callback ringing will continue to be heard at the Unattended Conference originator's extension, and the Disconnect Timer begins.
  4) When the disconnect Timer expires, the conference is disconnected.

  If the Unattended Conference originator returns to the conference before the line is disconnected, all timers are cleared.

- **For a Conference With Six or More Parties**
  The EECHO or ECHO card is required. Also the echo cancelling function should be enabled through system programming.

Installation Manual References

KX-TDA30
2.5.3 ECHO8 Card (KX-TDA3166)
KX-TDA100/KX-TDA200
2.6.5 ECHO16 Card (KX-TDA0166)
KX-TDA600
2.8.6 EECHO16 Card (KX-TDA6166)

Programming Manual References

PC Programming Manual

2.8.4 [2-3] Timers & Counters—Dial / IRNA / Recall / Tone
→ Unattended Conference—Recall Start Timer
→ Unattended Conference—Warning Tone Start Timer
→ Unattended Conference—Disconnect Timer
2.8.11 [2-7-1] Class of Service—COS Settings—TRS—Transfer to CO
2.8.17 [2-9] System Options—Option 3
→ Confirmation Tone—Tone 4-1 : Start Conference
→ Confirmation Tone—Tone 4-2 : Finish Conference
→ Echo Cancel—Conference
2.10.5 [4-1-4] Wired Extension—Flexible Button—Type
2.10.13 [4-2-3] Portable Station—Flexible Button—Type
2.10.17 [4-3] DSS Console—Flexible Button—Type

PT Programming Manual

None

Feature Guide References

1.20.2 Flexible Buttons
3.1 Capacity of System Resources

User Manual References

1.4.5 Multiple Party Conversation

1.14.1.3 Privacy Release

Description

By default, all conversations which take place on trunks, extension lines and doorphone lines are protected by privacy (**Automatic Privacy**).
Privacy Release allows a PT/PS user to suspend Automatic Privacy for an existing trunk call on the S-CO button in order to establish a three-party call.
System programming is required to enable or disable this feature.

Conditions

- **S-CO Button**
  A flexible button can be customised as the S-CO button.
- **Privacy Release Time**
  Privacy is released for five seconds to allow the conversation to be joined.
- This feature overrides Data Line Security (→ 1.11.5 Data Line Security) and Executive Busy Override Deny (→ 1.8.2 Executive Busy Override).

Programming Manual References

PC Programming Manual

2.8.17 [2-9] System Options—Option 1—PT Operation—Privacy Release by SCO key

2.10.5 [4-1-4] Wired Extension—Flexible Button—Type

2.10.13 [4-2-3] Portable Station—Flexible Button—Type

2.10.17 [4-3] DSS Console—Flexible Button—Type

PT Programming Manual

None

Feature Guide References

1.20.2 Flexible Buttons

User Manual References

1.4.5 Multiple Party Conversation

1.15 Paging Features

1.15.1 Paging

Description

An extension user can make a voice announcement to many destinations simultaneously.
The message is announced over the built-in speakers of PTs and/or external speakers (external pagers) which belong to the paging group. (With the KX-TDA100/KX-TDA200/KX-TDA600, up to two external pagers can be connected; with the KX-TDA30, one external pager can be connected.)
The paged person can answer the page from a nearby telephone.
It is possible to page with a call on hold in order to transfer the call.

Paging Deny:
An extension user can choose not to receive paging announcements.

Paging Group

Each paging group consists of extension user groups and external pagers. One extension user group or external pager can belong to several paging groups.
(→ 2.2.2 Group)

[Example]

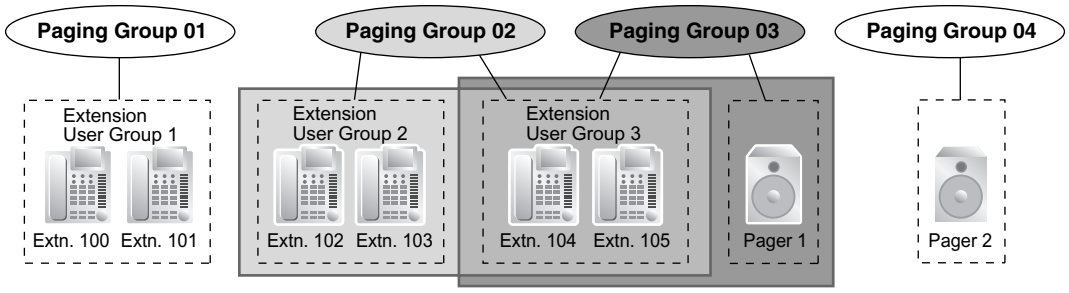

[Programming Example]

Paging Group No.	Extension User Group No.*1				External Pager No.*2	
	001	002	003	...	1	2
01	✔			...		
02		✔	✔	...		
03			✔	...	✔	
04				...		✔
05	✔	✔	✔	...	✔	✔
:	:	:	:	...	:	:

✔: Constituent

*1: →2.9.7 [3-4] Paging Group
or
2.9.8 [3-4] Paging Group—All Setting
→ [640] Extension User Groups of a Paging Group
*2: →2.9.9 [3-4] Paging Group—External Pager
→ [641] External Pagers of a Paging Group

Conditions

- Extensions which cannot be paged are:
  – PSs
  – SLTs
  – Ringing or busy PTs
  – PTs in Paging Deny mode
  – PTs in Paging DND mode

  These extensions cannot be paged but can answer the page.
- **External Pager Priority**
  External pagers can be used with the following priorities:
  TAFAS → Paging → BGM
  (→ 1.17.3 Trunk Answer From Any Station (TAFAS), 1.17.4 Background Music (BGM))
- **Volume Control**
  Paging volume from the PTs and the external pagers can be changed through system programming.
- **Paging DND**
  When DND (→ 1.3.1.3 Do Not Disturb (DND)) is set for incoming calls, it is programmable whether your extension receives paging through system programming.

Programming Manual References

PC Programming Manual

2.8.8 [2-6-1] Numbering Plan—Main—Features
→Group Paging
→Group Paging Answer
→Paging Deny Set / Cancel
2.8.17 [2-9] System Options
→Option 1—PT Fwd / DND—Paging to DND Extension
→Option 3—Confirmation Tone—Tone 2 : Paged / Automatic Answer
2.8.19 [2-11-1] Audio Gain (Paging/MOH)—Paging/MOH
→Paging—EPG 1 (External Pager 1) (KX-TDA100/KX-TDA200/KX-TDA600 only)
→Paging—EPG 2 (External Pager 2) (KX-TDA100/KX-TDA200/KX-TDA600 only)
→Paging—EPG (External Pager) (KX-TDA30 only)
→Paging—Paging Level from PT Speaker
2.9.7 [3-4] Paging Group
2.9.8 [3-4] Paging Group—All Setting
2.9.9 [3-4] Paging Group—External Pager
2.10.1 [4-1-1] Wired Extension—Extension Settings—Option 6—Paging Deny

PT Programming Manual

[640] Extension User Groups of a Paging Group
[641] External Pagers of a Paging Group

Feature Guide References

3.1 Capacity of System Resources

User Manual References

1.7.1 Paging
1.7.2 Answering/Denying a Paging Announcement

1.16 Broadcasting Features

1.16.1 Broadcasting

Description

A PT user can call multiple parties, assigned as members of a group (broadcasting group), to make a voice announcement. After one member answers the call, the caller can begin to make an announcement. Other members' telephones will continue to ring, and each member can listen to the announcement by answering the call. The caller will hear a confirmation tone every time the members answer the call.
During the announcement, the voices of members will not be heard. However, the caller can allow specific members to speak, making a conference call. A maximum of four parties can participate in the conference call simultaneously. This conversation can be heard by the other members.

Broadcasting Group

Eight broadcasting groups can be programmed, and a maximum of 31 members can be assigned to each group. The available destinations as members of the broadcasting group are as follows:

Destination	Availability
Wired Extension (PT/SLT/ISDN Extension/T1-OPX)	✔
PS	✔
Incoming Call Distribution Group	
PS Ring Group	
Floating Extension no. for SVM	
VM Group (DTMF/DPT)	
External Pager (TAFAS)	
DISA	
Analogue/ISDN Remote Maintenance	
Idle Line Access no. + Phone no.	
Trunk Group Access no. + Trunk Group no. + Phone no.	✔*
Other PBX Extension (TIE with no PBX Code)	✔*
Other PBX Extension (TIE with PBX Code)	✔*

*: Only available when the networking type of the trunk is assigned as private.

Conference Call

The caller can allow members to speak, and can control the conversation using the following buttons. Pressing the other buttons during the conversation will be ignored.

Button	Function
DSS	Establishes a conversation with the corresponding member extension, or remove the extension from the conversation.

Button	Function
CONF (Conference)	Establishes a conversation with the current members in the order assigned in the broadcasting group. Pressing this button again will add the next available member in the group to the conversation.
TRANSFER	Removes the member who joined the conversation last. The member can still listen to the announcement.
FLASH/RECALL (Flash/Recall mode)	Removes the member who joined the conversation last. The member will be disconnected from the broadcasting call and hear a reorder tone.
SP-PHONE	Enables a hands-free conversation.

A member extension can inform the caller that he wants to speak or join the conversation by sending a notification. The caller will hear a notification tone and the requesting extension's information will be shown on the display for five seconds.

Conditions

- **Hardware Requirement:** An EMEC or MEC card
- Only PTs that are permitted by COS programming can originate broadcasting calls.
- **Ring Duration**
  A system timer is available to limit the call ring duration at the members. When this limit is reached, members' telephones will stop ringing. If no members have answered the call, the caller will hear a busy tone.
- The broadcasting call will reach a member extension regardless of settings such as Call Forwarding (except DND).
- If a member extension is busy and has Call Waiting for trunk calls activated when a broadcasting call is made, a call waiting tone will be sent to the extension.
- The call information of the caller (not members) will be recorded on SMDR.
- A caller cannot make a broadcasting call with a call on hold.
- Call Pickup is not available for a broadcasting call. (→ 1.4.1.3 Call Pickup)
- The broadcasting call will not reach members when:
  – the member extension has set DND for intercom calls.
  – the member extension is a PS in Wireless XDP Parallel Mode. (→ 1.25.5 Wireless XDP Parallel Mode)

Installation Manual References

KX-TDA30

2.5.7 MEC Card (KX-TDA3105)

KX-TDA100/KX-TDA200

2.3.2 MEC Card (KX-TDA0105)

KX-TDA600

2.3.2 EMEC Card (KX-TDA6105)

Programming Manual References

PC Programming Manual

2.8.4 [2-3] Timers & Counters—Miscellaneous—Broadcasting—Ring Duration

2.8.8 [2-6-1] Numbering Plan—Main—Features—Broadcasting Operation

2.8.11 [2-7-1] Class of Service—COS Settings—CO & SMDR—Broadcasting Operation

2.9.24 [3-10] Broadcasting Group

2.9.25 [3-10] Broadcasting Group—Member List

PT Programming Manual

None

Feature Guide References

3.1 Capacity of System Resources

User Manual References

1.7.3 Making an Announcement and Having a Multiple Party Conversation (Broadcasting)

1.17 Optional Device Features

1.17.1 Doorphone Call

Description

It is possible to connect doorphones directly to the PBX. When a visitor presses the call button on a doorphone, the doorphone calls a preprogrammed destination (extension or outside party). In addition, extension users can dial the preset number of a doorphone to call that doorphone.

Conditions

- **Hardware Requirement:**
  KX-TDA30: An optional doorphone and a DPH card
  KX-TDA100/KX-TDA200/KX-TDA600: An optional doorphone, the OPB card and DPH card
- Each doorphone port can only be assigned to one tenant. The Time Table (day/lunch/break/night) of the tenant applies. (→ 2.2.4 Time Service)
- **Call Destination**
  The incoming doorphone call destination(s) can be assigned for each time mode (day/lunch/break/night) for each doorphone port. Destinations can be selected. (→ 1.1.2.1 Internal Call Features—SUMMARY)
- COS programming determines the doorphone ports that are able to make an outgoing trunk call.
- Internal Call Block determines which extensions can call a doorphone. (→ 1.1.2.2 Internal Call Block)
- **Ring Duration**
  If an incoming call is not answered within a preprogrammed time period, ringing stops and the call is cancelled.
- **Call Duration**
  The call duration can be restricted by a system timer. If the timer expires, the call will be disconnected.
- **Door Open**
  While engaged on a doorphone call, the extension user can unlock the door to let the visitor in. (→ 1.17.2 Door Open)
- A doorphone number can be referenced for each doorphone port.
- **KX-TDA30 only**
  Doorphones 1 and 2 (or 3 and 4) cannot make a call simultaneously. If a visitor presses the doorphone button while the other doorphone is engaged in a call, he will hear no tone.
  Doorphones 1 and 2 (or 3 and 4) cannot receive a call simultaneously. If an extension user calls a doorphone while the other doorphone is engaged in a call, he will hear a busy tone.

Installation Manual References

KX-TDA30

2.5.1 DPH4 Card (KX-TDA3161)

2.5.2 DPH2 Card (KX-TDA3162)

2.9.1 Connection of Doorphones, Door Openers, External Sensors, and External Relays

KX-TDA100/KX-TDA200

2.6.1 OPB3 Card (KX-TDA0190)

2.6.2 DPH4 Card (KX-TDA0161)

2.6.3 DPH2 Card (KX-TDA0162)
2.10.1 Connection of Doorphones, Door Openers, External Sensors, and External Relays

KX-TDA600

2.8.1 OPB3 Card (KX-TDA0190)
2.8.2 DPH4 Card (KX-TDA0161)
2.8.3 DPH2 Card (KX-TDA0162)
2.12.1 Connection of Doorphones, Door Openers, External Sensors, and External Relays

Programming Manual References

PC Programming Manual

2.8.4 [2-3] Timers & Counters—DISA / Door / Reminder / U. Conf
→ Doorphone—Call Ring Duration
→ Doorphone—Call Duration
2.8.8 [2-6-1] Numbering Plan—Main—Features—Doorphone Call
2.8.11 [2-7-1] Class of Service—COS Settings—TRS—TRS Level—Day, Lunch, Break, Night
2.8.15 [2-8-2] Ring Tone Patterns—Call from Doorphone
2.8.17 [2-9] System Options—Option 3—Confirmation Tone—Tone 1 : Doorphone / Called by Voice
2.11.1 [5-1] Doorphone

PT Programming Manual

[720] Doorphone Call Destination
[729] Doorphone Number Reference

User Manual References

1.10.1 If a Doorphone/Door Opener is Connected

1.17.2 Door Open

Description

An extension user can unlock the door for a visitor using his telephone.
The door can be unlocked by extension users who are allowed to unlock the door through COS programming. However, while engaged on a doorphone call, any extension user can unlock the door to let the visitor in (→ 1.17.1 Doorphone Call).

Conditions

- **Hardware Requirement**: A user-supplied door opener on each door.
- The door opener will unlock the door even if a doorphone is not installed.
- **Door Open Duration**
  The door can remain unlocked for a preprogrammed time period.
- **KX-TDA30 only**
  The port of the DPH4 card to which the door opener is connected must be assigned through system programming as a door opener port (not a relay port). If it is not, it may not be possible to open the door while on a doorphone call.

Installation Manual References

KX-TDA30

2.9.1 Connection of Doorphones, Door Openers, External Sensors, and External Relays

KX-TDA100/KX-TDA200

2.10.1 Connection of Doorphones, Door Openers, External Sensors, and External Relays

KX-TDA600

2.12.1 Connection of Doorphones, Door Openers, External Sensors, and External Relays

Programming Manual References

PC Programming Manual

2.7.39 [1-1] Slot—OPB (KX-TDA100/KX-TDA200/KX-TDA600 only)—For Output (EIO)—Device Type

2.8.4 [2-3] Timers & Counters—DISA / Door / Reminder / U. Conf—Doorphone—Open Duration

2.8.8 [2-6-1] Numbering Plan—Main—Features—Door Open

2.8.11 [2-7-1] Class of Service—COS Settings—CO & SMDR—Door Unlock

PT Programming Manual

[207] Door Unlock Time

[512] Permission for Door Open Access

Feature Guide References

2.2.1 Class of Service (COS)

User Manual References

1.10.1 If a Doorphone/Door Opener is Connected

1.17.3 Trunk Answer From Any Station (TAFAS)

Description

When a call is received at the floating extension number assigned to the external pager, a ring tone is sent through the pager. Any extension user can then answer the call.

Conditions

- **Hardware Requirement:** A user-supplied external pager
- **Floating Extension Number**
  A floating extension number must be assigned for an external pager (default: 600). It is possible to access an external pager by dialling its floating extension number.
- **Pager Volume**
  It is possible to change the volume of an external pager through system programming.

Installation Manual References

KX-TDA30

2.10.1 Connection of Peripherals

KX-TDA100/KX-TDA200

2.11.1 Connection of Peripherals

KX-TDA600

2.13.1 Connection of Peripherals

Programming Manual References

PC Programming Manual

2.8.8 [2-6-1] Numbering Plan—Main—Features—TAFAS Answer

2.8.19 [2-11-1] Audio Gain (Paging/MOH)—Paging/MOH

→ Paging—EPG 1 (External Pager 1) (KX-TDA100/KX-TDA200/KX-TDA600 only)

→ Paging—EPG 2 (External Pager 2) (KX-TDA100/KX-TDA200/KX-TDA600 only)

→ Paging—EPG (External Pager) (KX-TDA30 only)

2.11.2 [5-2] External Pager

PT Programming Manual

[700] External Pager Floating Extension Number

User Manual References

1.3.4 Answering a Call via an External Speaker (Trunk Answer From Any Station [TAFAS])

1.17.4 Background Music (BGM)

Description

A PT user can listen to BGM through the built-in speaker while on-hook and idle.

BGM—External:
BGM can also be broadcast in the office through the external pagers, this can be turned on and off by an extension assigned as the manager.

Conditions

[BGM]

- **Hardware requirement:** A user-supplied external music source, such as a radio
- The music through the PT is interrupted when going off-hook.
- **KX-TDA100/KX-TDA200/KX-TDA600 only**
  Each user can set/cancel BGM, and also select the music source.
- **KX-TDA30 only**
  Each user can only set/cancel BGM; the user cannot make a music selection.

[BGM—External]

- **Hardware requirement:** A user-supplied external pager
- External pagers can be used with the following priorities:
  TAFAS → Paging → BGM
  (→ 1.15.1 Paging, 1.17.3 Trunk Answer From Any Station (TAFAS))

Installation Manual References

KX-TDA30

2.10.1 Connection of Peripherals

KX-TDA100/KX-TDA200

2.11.1 Connection of Peripherals

KX-TDA600

2.13.1 Connection of Peripherals

Programming Manual References

PC Programming Manual

2.8.3 [2-2] Operator & BGM
→BGM and Music on Hold—Music Source of BGM2 (KX-TDA100/KX-TDA200/KX-TDA600 only)
→BGM and Music on Hold—Music Source of BGM (KX-TDA30 only)

2.8.8 [2-6-1] Numbering Plan—Main—Features
→External BGM On / Off
→BGM Set / Cancel

2.8.19 [2-11-1] Audio Gain (Paging/MOH)—Paging/MOH
→MOH—MOH 1 (Music On Hold 1) (KX-TDA100/KX-TDA200/KX-TDA600 only)
→MOH—MOH 2 (Music On Hold 2) (KX-TDA100/KX-TDA200/KX-TDA600 only)

→MOH—MOH (Music On Hold) (KX-TDA30 only)

2.11.2 [5-2] External Pager

PT Programming Manual

None

User Manual References

1.8.8 Turning on the Background Music (BGM)

2.1.4 Turning on the External Background Music (BGM)

1.17.5 Outgoing Message (OGM)

Description

An extension assigned as the manager (manager extension) can record outgoing messages (OGMs) for the following features:

Feature	Usage & Reference
Direct Inward System Access (DISA)	When a call arrives on a DISA line, the caller will hear a message. → 1.17.6 Direct Inward System Access (DISA)
Queuing Feature	If assigned in the Queuing Time Table of the incoming call distribution group, any caller who is waiting in a queue will hear a message. → 1.2.2.4 Queuing Feature
Timed Reminder	When answering the Timed Reminder Alarm, the user will hear a message. → 1.28.4 Timed Reminder

Conditions

- **Hardware Requirement:**
  KX-TDA30: The MSG card
  KX-TDA100/KX-TDA200/KX-TDA600: The OPB card and MSG card
- **Number of Messages and Recording Time**
  A maximum of 64 (with the KX-TDA100/KX-TDA200/KX-TDA600) or 32 (with the KX-TDA30) messages can be recorded. The total recording time in the PBX is eight minutes.
- A floating extension number is assigned to each outgoing message (OGM) (default: 5 + two-digit OGM number).
- One MSG card allows four (with the KX-TDA100/KX-TDA200/KX-TDA600) or two (with the KX-TDA30) messages to play simultaneously. The MSG card expansion does not increase the total recording time or the number of messages. It increases the number of messages that can be played simultaneously.
  [Example]

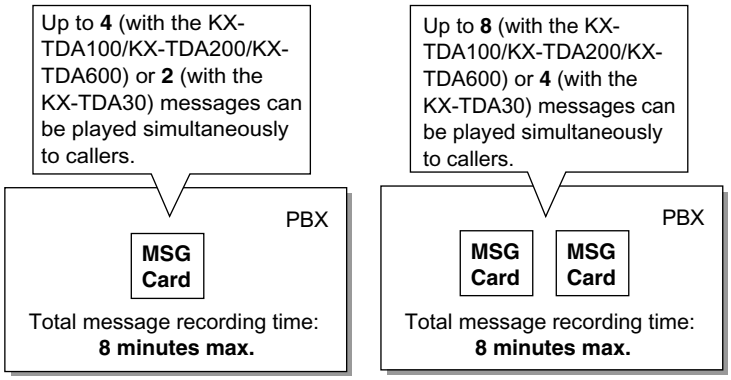

Note

When MSG card expansion has been completed, the new MSG card is blank—all necessary messages will need to be stored in the card. This can be done in two ways:

a) By installing the new MSG card then recording each message again. The PBX will automatically store the new recordings in each MSG card.

b) By transferring messages from the PBX to a PC using the Maintenance Console, then transferring them back to the PBX with the new MSG card installed.

- The same message can also be played simultaneously to multiple callers.
- **Recording Methods**

a) Record voice messages through the extension telephone

b) Transfer prerecorded voice messages from external sound source into the PBX via an external music port.

Note

Record voice messages only; avoid the recording of music.

- After recording messages, a manager extension can also play them back for confirmation.
- Progress tone is sent to a manager extension before recording messages during a preprogrammed time period, or during clearing the prerecorded message stored at the floating extension number of desired message. The longer one is applied.
- Record a message when traffic is light (early morning or late evening).
- When the manager tries to record a message, he will hear ringback tone if a message channel is in use. When all ports of the MSG card(s) become idle, he will hear the progress tone for a preprogrammed time period.
  After that, the PBX will automatically proceed into the recording mode.

Installation Manual References

KX-TDA30

2.5.4 MSG2 Card (KX-TDA3191)

KX-TDA100/KX-TDA200

2.6.1 OPB3 Card (KX-TDA0190)

2.6.6 MSG4 Card (KX-TDA0191)

KX-TDA600

2.8.1 OPB3 Card (KX-TDA0190)

2.8.5 MSG4 Card (KX-TDA0191)

Programming Manual References

PC Programming Manual

2.5.6 Utility—Message File Transfer PC to PBX

2.5.7 Utility—Message File Transfer PBX to PC

2.8.4 [2-3] Timers & Counters—DISA / Door / Reminder / U. Conf—DISA—Progress Tone Continuation Time before Recording Message

2.8.8 [2-6-1] Numbering Plan—Main—Features—OGM Record / Clear / Playback

2.9.11 [3-5-2] Incoming Call Distribution Group—Queuing Time Table—Queuing Sequence—Sequence 01–16

2.11.4 [5-3-2] Voice Message—DISA Message

→Floating Extension Number

→Delayed Ring

PT Programming Manual

[631] Sequences in Queuing Time Table

[730] Outgoing Message (OGM) Floating Extension Number

Feature Guide References

3.1 Capacity of System Resources

User Manual References

2.1.5 Recording Outgoing Messages (OGM)

1.17.6 Direct Inward System Access (DISA)

Description

An outside caller can access specific PBX features as if the caller is an SLT extension user in the PBX, when the incoming call destination is a DISA floating extension number assigned to each DISA message. The caller can have direct access to features such as:

- Placing an intercom call to an extension, operator or any floating extensions (e.g., modem for remote system administration, an external pager for TAFAS).
- Calling an outside party via the PBX.
- Operating some PBX remote features (e.g., FWD)

DISA Intercept Routing—No Dial

If the caller fails to dial any digits within a preprogrammed time period (DISA 1st Dial Time for Intercept) after hearing the outgoing message (OGM), one of the following can be selected through system programming:

a) **Disable:** The call will be terminated.

b) **Operator:** The call will be redirected to the operator.

c) **AA-0, AA-9:** The call will be redirected to the destination assigned to that AA number.

→ 2.8.4 [2-3] Timers & Counters—DISA / Door / Reminder / U. Conf—DISA—No Dial Intercept Timer
→ [211] DISA Intercept Time

→ 2.11.3 [5-3-1] Voice Message—DISA System—Option 1—DISA Intercept—Intercept when No Dial after DISA answers (MPR Software File Version 3.1000 or later)

DISA Built-in Automated Attendant Number (DISA AA Service)

After listening to the outgoing message (OGM), the caller may dial a single digit (DISA AA number). The destination for each DISA AA number can be assigned for each message. It is also possible to assign other DISA floating extension numbers as the destination (**Multistep DISA AA Service**).
If the caller dials a second digit within a preprogrammed time period (DISA 2nd Dial Time for AA), the DISA AA service is not employed.

→ 2.11.4 [5-3-2] Voice Message—DISA Message—1 Digit AA Destination (Extension Number)—Dial 0–9
→ 2.8.4 [2-3] Timers & Counters—DISA / Door / Reminder / U. Conf—DISA—2nd Dial Timer for AA

Outgoing Message (OGM)

When a call arrives on a DISA line, a prerecorded DISA message will greet and guide the caller.
Any extension assigned as the manager can record outgoing messages (OGMs). (→ 1.17.5 Outgoing Message (OGM))

[Programming Example]

Outgoing Message (OGM) No.	Floating Extn. No.*1	Automated Attendant No.*2										Busy/DND Message No.*3
		0	1	2	3	4	5	6	7	8	9	
01	501	100	301	200	103	202	101	102	400	104	205	04
02	502											05

Outgoing Message (OGM) No.	Floating Extn. No.*1	Automated Attendant No.*2										Busy/DND Message No.*3
		0	1	2	3	4	5	6	7	8	9	
:	:	:	:	:	:	:	:	:	:	:	:	:

*1: → 2.11.4 [5-3-2] Voice Message—DISA Message—Floating Extension Number
→ [730] Outgoing Message (OGM) Floating Extension Number
*2: → 2.11.4 [5-3-2] Voice Message—DISA Message—1 Digit AA Destination (Extension Number)—Dial 0–9
*3: → 2.11.4 [5-3-2] Voice Message—DISA Message—Busy / DND Message No.

DISA Security Mode and Available Features

If the DISA AA service is not employed, the caller may access the PBX features by entering the feature numbers. To prevent others from accessing the PBX features, it is possible to assign DISA security.

→ 2.11.3 [5-3-1] Voice Message—DISA System—DISA Security—DISA Security Mode
→ [732] DISA Security Mode

The features available depend on the preprogrammed DISA security mode as follows:

Security Mode	Intercom Call	TIE Line Call		Trunk Call
		Without PBX Code	With PBX Code	
All Security				
Trunk Security	✔	✔		
No Security	✔	✔	✔	✔*

✔: Available
*: If trunk call is available, Account Code Entry (→ 1.5.4.3 Account Code Entry) is also available.

Note

DISA AA service and Operator Call (→ 2.2.5 Operator Features) are available for any security mode.

Security Mode Override by Verification Code Entry

If the caller performs Verification Code Entry (→ 1.9.6 Verification Code Entry) while hearing a DISA message, the security mode can be temporarily changed to No Security mode.
Entry method:
Verification Code Entry feature number + ✳ + verification code + verification code PIN
After changing mode, the new mode remains in force for the duration of the call.

DISA Intercept Routing—Busy

If the first destination called by the outside party is busy, the call is redirected as follows:

a) The call is redirected to the Intercept Routing—Busy destination assigned to the first destination.

b) If an Intercept Routing—Busy destination is not assigned to the first destination and a prerecorded DISA Busy Message is assigned, the caller will hear the DISA Busy Message.

c) If neither an intercept destination nor a DISA Busy Message is assigned, the caller will hear a busy tone.

→ 2.10.1 [4-1-1] Wired Extension—Extension Settings—Intercept Destination—Intercept Destination—When Called Party is Busy (MPR Software File Version 3.1000 or later)

DISA Intercept Routing—DND

If the destination called by the outside party is in DND mode and Idle Extension Hunting is not available, one of the following can be selected through system programming:

a) **Busy Tone:** The caller will hear a busy tone.

b) **Intercept:** DND will redirect the call to the preprogrammed destination on an extension basis.

c) **OGM:** An outgoing message (OGM) will be sent to the caller. The message for DND mode can be assigned for each outgoing message (OGM) which has a DISA floating extension number.

→ 2.11.3 [5-3-1] Voice Message—DISA System—DISA Intercept—Intercept when Destination through DISA sets DND

DISA Intercept Routing—No Answer

If a destination is not available to answer a DISA call within a preprogrammed time period (DISA Intercept time) after the call is reached, the call will be redirected to the programmed destination by the Intercept feature.
If the intercept destination is not available to answer the call within a preprogrammed time period (DISA Disconnect Time after Intercept) after the DISA Intercept time expires, the call will be disconnected.

2.8.4 [2-3] Timers & Counters—DISA / Door / Reminder / U. Conf

→ DISA—Intercept Timer—Day, Lunch, Break, Night

→ DISA—Disconnect Timer after Intercept

→ 2.9.1 [3-1-1] Trunk Group—TRG Settings—Intercept (not available for MPR Software File Version 3.1000 or later)—Intercept Destination—Day, Lunch, Break, Night (not available for MPR Software File Version 3.1000 or later)
→ 2.10.1 [4-1-1] Wired Extension—Extension Settings—Option 1—Intercept Destination—When called party does not answer—Day, Lunch, Break, Night
→ 2.10.10 [4-2-1] Portable Station—Extension Settings—Option 1—Intercept Destination—When called party does not answer—Day, Lunch, Break, Night

→ [604] Extension Intercept Destination

Walking COS Through DISA

If the caller performs Walking COS (extension number and PIN entry) while hearing a DISA message, the security mode can be temporarily changed to No Security mode (→ 1.9.5 Walking COS). After performing Walking COS, the following features are available, using the settings of the specified extension:

- Intercom call
- TIE line call
- Trunk call
- Call Forwarding (FWD)/Do Not Disturb (DND) setting (→ 1.3.1 Call Forwarding (FWD)/Do Not Disturb (DND))
- Incoming Call Distribution Group Log-in/Log-out (→ 1.2.2.7 Log-in/Log-out)
- Absent Message setting (→ 1.19.2 Absent Message)
- Extension Dial Lock (→ 1.9.3 Extension Dial Lock)
- Time Service Switching Mode (→ 2.2.4 Time Service)

DISA Automatic Walking COS

Registered outside destinations such as cellular phones can be automatically recognised as PBX extensions when calling through DISA. When the Caller ID of a received trunk call matches an entry in the System Speed Dialling Table, the calling telephone is given Walking COS authorisation as assigned to the corresponding CLI destination extension. Therefore, the "CLI destination" setting in the System Speed Dialling Table is used here to specify the target extension that the calling telephone will be recognised as for Walking COS.

[Programming Example of DIL Table]

Trunk No.	CLI			Destination		
	Day	Lunch	...	Day	Lunch	...
01	Disable	Disable	...	501 (DISA)	501 (DISA)	...
:	:	:	:	:	:	:

"CLI" must be set to Disable, to allow incoming calls to be received by DISA.

[Programming Example of System Speed Dialling Table]

Location	Name	Trunk Access + Telephone Number	CLI Destination
000	J. Smith	912341115678	200
001	:	:	:
:	:	:	:

In this example, calls received on trunk 01 are routed to the DISA OGM with floating extension number 501. If the number of the received call (after modification according to the Caller ID table) is "12341115678", the call originator is recognised as extension 200, and the Walking COS feature is automatically activated. System programming is required to enable this feature.

SMDR

The call information for DISA is recorded as the one of the DISA floating extension numbers. (→ 1.26.1 Station Message Detail Recording (SMDR))

[Flowchart]

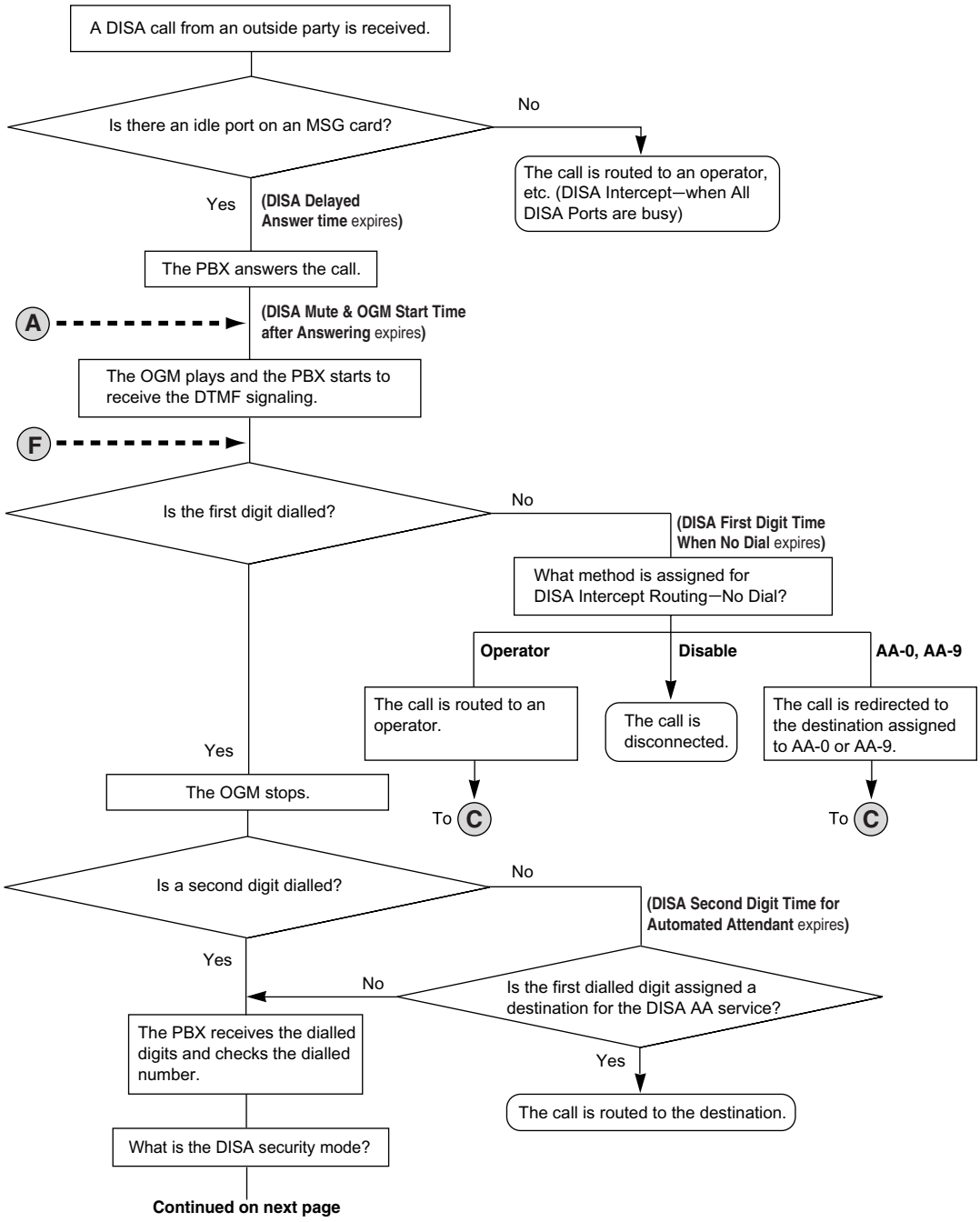
A DISA call from an outside party is received.
Is there an idle port on an MSG card?
No
The call is routed to an operator, etc. (DISA Intercept—when All DISA Ports are busy)
Yes
(DISA Delayed Answer time expires)
The PBX answers the call.
A
(DISA Mute & OGM Start Time after Answering expires)
The OGM plays and the PBX starts to receive the DTMF signaling.
F
Is the first digit dialled?
No
(DISA First Digit Time When No Dial expires)
What method is assigned for DISA Intercept Routing—No Dial?
Operator
Disable
AA-0, AA-9
The call is routed to an operator.
The call is disconnected.
The call is redirected to the destination assigned to AA-0 or AA-9.
To C
To C
Yes
The OGM stops.
Is a second digit dialled?
No
(DISA Second Digit Time for Automated Attendant expires)
Yes
No
Is the first dialled digit assigned a destination for the DISA AA service?
Yes
The PBX receives the dialled digits and checks the dialled number.
The call is routed to the destination.
What is the DISA security mode?
Continued on next page

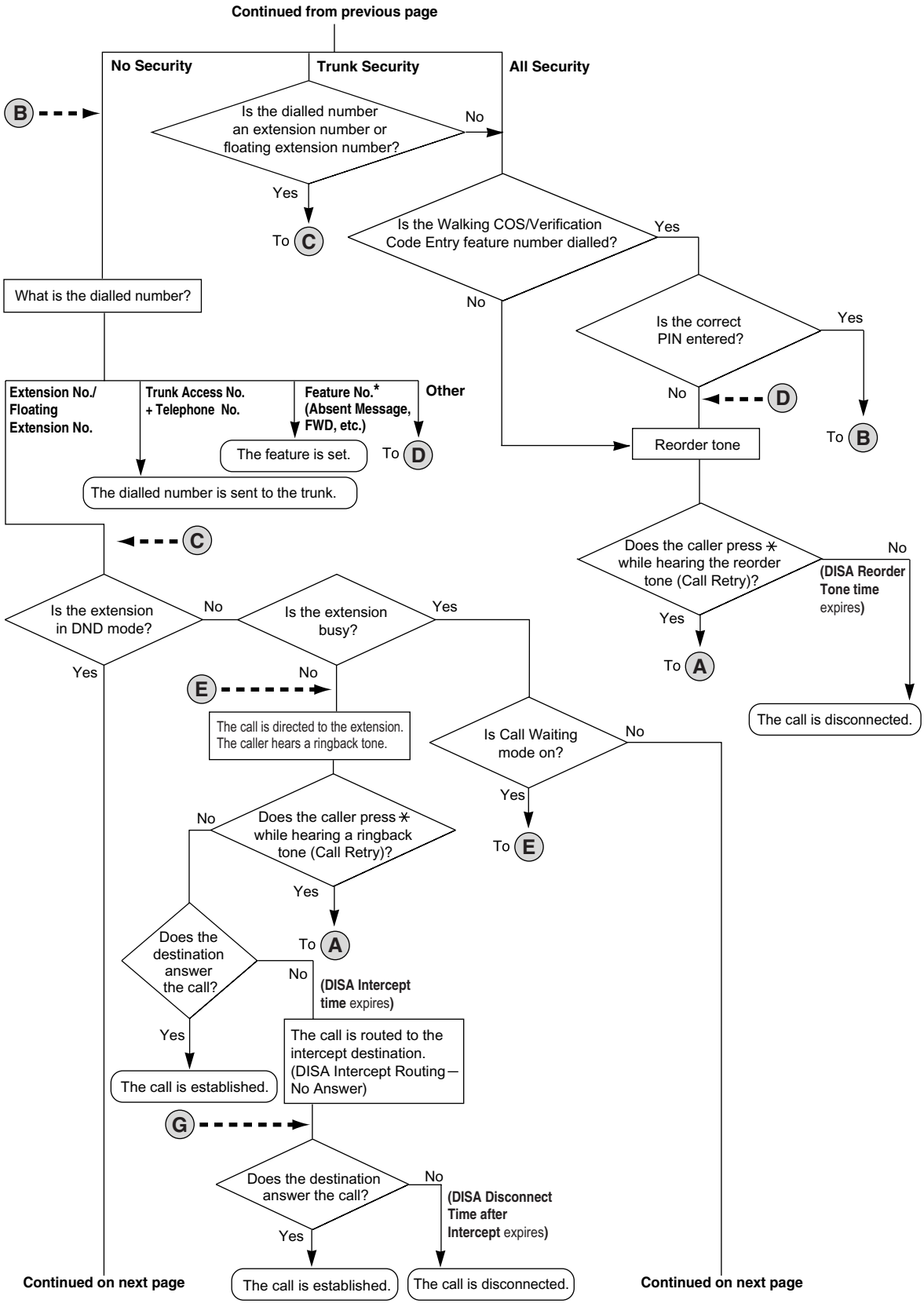

* Feature numbers are available only when the Walking COS feature is used.

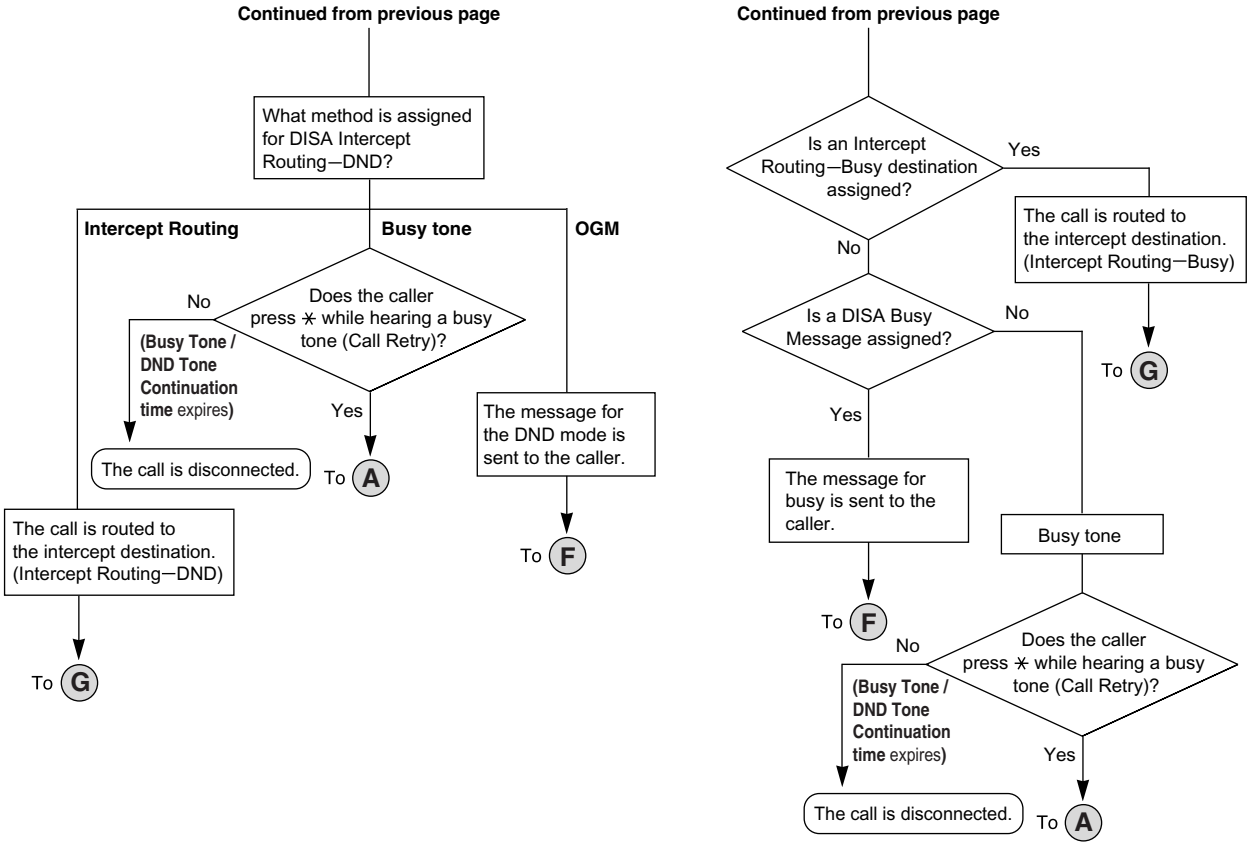

Conditions

[General]

WARNING

There is a risk that fraudulent telephone calls will be made using the Trunk-to-Trunk Call feature of DISA.

The cost of such calls will be billed to the owner/renter of the PBX.

To protect the PBX from this kind of fraudulent use, we strongly recommend:

a) Enabling DISA security (Trunk Security or All Security).

b) Keeping passwords (verification code PINs/extension PINs) secret.

c) Selecting complex, random PINs that cannot be easily guessed.

d) Changing PINs regularly.

- **Hardware Requirement:**
  KX-TDA30: An MSG card
  KX-TDA100/KX-TDA200/KX-TDA600: An OPB card and MSG card
- **DISA Delayed Answer Time**
  It is possible to set the Delayed Answer time so that the caller will hear a ringback tone within a preprogrammed time period first before hearing an outgoing message (OGM).
  → 2.8.4 [2-3] Timers & Counters—DISA / Door / Reminder / U. Conf—Recall—Hold Recall
  → [209] DISA Delayed Answer Time
- **Call Retry**
  While hearing a ringback, reorder, or busy tone, retrying the call is possible by pressing "✳". System

programming selects whether pressing "✳" during a trunk-to-trunk conversation returns to the DISA top menu or sends a DTMF tone.

- **DISA Mute Time**
  It is possible to set the Mute time until the outgoing message (OGM) plays and the PBX starts to receive the DTMF signalling after the caller reaches the DISA line.

  → 2.8.4 [2-3] Timers & Counters—DISA / Door / Reminder / U. Conf—DISA—Mute & OGM Start Timer after Answering
- **End of Call Detection**
  If a call through DISA is routed to a trunk, DISA can be used to detect the end of the call. This function can be disabled through system programming. If disabled, DISA is released when the trunk-to-trunk connection is made.
  The following three types of tone detection can be enabled for each trunk group to disconnect a trunk-to-trunk call via DISA.
  - Silence Detection

    → 2.9.1 [3-1-1] Trunk Group—TRG Settings—Main—DISA Tone Detection—Silence
    → [475] DISA Silence Detection
  - Continuous Signal Detection

    → 2.9.1 [3-1-1] Trunk Group—TRG Settings—Main—DISA Tone Detection—Continuous
    → [476] DISA Continuous Signal Detection
  - Cyclic Signal Detection

    → 2.9.1 [3-1-1] Trunk Group—TRG Settings—Main—DISA Tone Detection—Cyclic
    → [477] DISA Cyclic Signal Detection
- **Trunk-to-Trunk Call Duration Limitation**
  For a call between two outside parties, even if end of call detection cannot be performed, the call can be disconnected by a system timer. (→ 1.11.8 Trunk Call Limitation) If the timer expires, the line will be disconnected unless the originating caller extends the time by sending any DTMF signalling. The caller can prolong the call duration within the preprogrammed time period and preprogrammed number of times.

  2.8.4 [2-3] Timers & Counters—DISA / Door / Reminder / U. Conf
  → DISA—CO-to-CO Call Prolong Counter
  → DISA—CO-to-CO Call Prolong Time
  → [210] DISA Trunk-to-Trunk Call Prolong Time
- **Automatic DISA Activation**
  DISA can be set through system programming to automatically activate for the following types of trunk-to-trunk call, to enable detection of the end of the call.
  - When a trunk call is forwarded to another trunk
  - When a trunk call is transferred to another trunk
  - When a trunk call to an incoming call distribution group is answered by an outside destination member

  Before the call is made, the PBX confirms that a DISA port is available. If no DISA ports are available, the call is not routed to a trunk. For transferred calls or calls to an ICD Group, if the DISA port has become unavailable when the trunk-to-trunk conversation is actually established, the call is established without DISA.
  When using this feature, the Trunk-to-Trunk Call Limitation timer should be enabled. In addition, prolonging the call through DTMF signalling is not available.
- **DISA Call Transfer from Outside Destination**
  An outside party such as a cellular phone can transfer a trunk call to an extension at the PBX by pressing “#” + extension number, if DISA is connected by the Automatic DISA Activation feature. This feature can be enabled or disabled through system programming.

  - The KX-TDA6920, KX-TDA0920 or KX-TDA3920 SD Memory Card for Software Upgrade to Enhanced Version is required to use this feature.
  - DISA security mode should be set to No Security or Trunk Security.
  - If the called extension does not answer, is busy, or is in DND mode, the DISA Intercept feature operates.
  - The party on hold can use the Call Retry feature.
  - End of Call Detection does not operate after dialling "#".
  - Calls can only be transferred to extensions within the PBX.
  - Transfer Recall, Call Splitting and Call Transfer with Announcement are not available.
- **DISA Reorder Tone Duration**
  It is possible to set the DISA Reorder Tone Duration time. This specifies the length of time that a reorder tone will be sent to the caller. When the timer expires, the call will be disconnected. Call Retry is possible during the DISA Reorder Tone Duration time.
  → 2.8.4 [2-3] Timers & Counters—DISA / Door / Reminder / U. Conf—DISA—Reorder Tone Duration
- **Call Deny**
  Extensions can deny DISA calls on a COS basis.
  → 2.8.11 [2-7-1] Class of Service—COS Settings—Extension Feature—Accept the Call from DISA
- **Verification Code PIN Lock/Extension PIN Lock**
  If the wrong PIN is entered three times, the line will be disconnected. If the wrong PIN is entered a preprogrammed number of times successively, that extension or verification code will become locked, and even entering the correct PIN will not unlock it. Only an extension assigned as the manager can unlock it. In this case, the PIN will be unlocked and cleared.
  → 2.8.4 [2-3] Timers & Counters—Miscellaneous—Extension PIN—Lock Counter
- **DISA Automatic Walking COS**
  - The KX-TDA6920, KX-TDA0920 or KX-TDA3920 SD Memory Card for Software Upgrade to Enhanced Version is required to use this feature.
- Each outgoing message (OGM) can be assigned a name through system programming for programming reference.
  → 2.11.4 [5-3-2] Voice Message—DISA Message—Name
  → [731] Outgoing Message (OGM) Name

[MPR Software File Version 3.0000]

- **DISA Intercept Routing—No Dial**
  If the caller fails to dial any digits within a preprogrammed time period (DISA 1st Dial Time for Intercept) after hearing the outgoing message (OGM), the call is redirected to the operator extension.
- **DISA Intercept Routing—Busy/DND**
  If the destination called by the outside party is busy or in DND mode, and if (1) the busy destination does not set Call Waiting, FWD, or Idle Extension Hunting or (2) the destination is in DND mode and Idle Extension Hunting is not available, one of the following can be selected through system programming:
  - **Busy Tone:** A busy tone will be sent to the caller.
  - **Intercept:** Intercept Routing—Busy/DND will redirect the call to the preprogrammed destination on an extension basis.
  - **OGM:** An outgoing message (OGM) will be sent to the caller. The message for busy/DND mode can be assigned for each outgoing message (OGM) which has a DISA floating extension number.
    2.11.3 [5-3-1] Voice Message—DISA System
    → DISA Intercept—Intercept when Destination through DISA is Busy (not available for MPR Software File Version 3.1000 or later)
    → DISA Intercept—Intercept when Destination through DISA sets DND

- When all DISA ports are busy, the call is redirected to the Intercept Routing destination assigned to the trunk group.

Installation Manual References

KX-TDA30

2.5.4 MSG2 Card (KX-TDA3191)

KX-TDA100/KX-TDA200

2.6.1 OPB3 Card (KX-TDA0190)

2.6.6 MSG4 Card (KX-TDA0191)

KX-TDA600

2.8.1 OPB3 Card (KX-TDA0190)

2.8.5 MSG4 Card (KX-TDA0191)

Programming Manual References

PC Programming Manual

2.8.4 [2-3] Timers & Counters—DISA / Door / Reminder / U. Conf

→ DISA—Delayed Answer Timer

→ DISA—Mute & OGM Start Timer after Answering

→ DISA—No Dial Intercept Timer

→ DISA—2nd Dial Timer for AA

→ DISA—Intercept Timer—Day, Lunch, Break, Night

→ DISA—Disconnect Timer after Intercept

→ DISA—CO-to-CO Call Prolong Counter

→ DISA—CO-to-CO Call Prolong Time

→ DISA—Progress Tone Continuation Time before Recording Message

→ DISA—Reorder Tone Duration

2.8.4 [2-3] Timers & Counters—Miscellaneous—Extension PIN—Lock Counter

2.8.11 [2-7-1] Class of Service—COS Settings—Extension Feature—Accept the Call from DISA

2.9.1 [3-1-1] Trunk Group—TRG Settings

→ Intercept (not available for MPR Software File Version 3.1000 or later)—Intercept Destination—Day, Lunch, Break, Night (not available for MPR Software File Version 3.1000 or later)

→ Tone Detection—DISA Tone Detection—Silence

→ Tone Detection—DISA Tone Detection—Continuous

→ Tone Detection—DISA Tone Detection—Cyclic

2.10.1 [4-1-1] Wired Extension—Extension Settings—Option 1—Intercept Destination—When called party does not answer—Day, Lunch, Break, Night

2.10.10 [4-2-1] Portable Station—Extension Settings—Option 1—Intercept Destination—When called party does not answer—Day, Lunch, Break, Night

2.11.3 [5-3-1] Voice Message—DISA System

2.11.4 [5-3-2] Voice Message—DISA Message

PT Programming Manual

[209] DISA Delayed Answer Time

[210] DISA Trunk-to-Trunk Call Prolong Time

[211] DISA Intercept Time

[470] Trunk Group Intercept Destination (not applicable for MPR Software File Version 3.1000 or later)
[475] DISA Silence Detection
[476] DISA Continuous Signal Detection
[477] DISA Cyclic Signal Detection
[604] Extension Intercept Destination
[730] Outgoing Message (OGM) Floating Extension Number
[731] Outgoing Message (OGM) Name
[732] DISA Security Mode

Feature Guide References

1.1.1.6 Intercept Routing
1.1.1.7 Intercept Routing—No Destination
1.3.1 Call Forwarding (FWD)/Do Not Disturb (DND)
2.2.1 Class of Service (COS)

User Manual References

1.2.8 To Access Another Party Directly from Outside (Direct Inward System Access [DISA])
1.2.9 Setting Your Telephone from Another Extension or through DISA (Remote Setting)

1.17.7 Automatic Fax Transfer

Description

The PBX can distinguish between fax calls and other types of calls arriving on DISA lines, and automatically transfer fax calls to preprogrammed destinations. When a call arrives on a DISA line, an OGM is played (→ 1.17.5 Outgoing Message (OGM)). At the same time, the PBX begins fax signal detection. If a fax signal is detected, the PBX recognises that the call is a fax call, and transfers the call to the fax destination assigned to that OGM through system programming. This allows a single trunk to be used seamlessly for both voice and fax calls, with only voice calls arriving at user extensions.
This feature is only available for the KX-TDA30.

[Available Automatic Fax Transfer Destinations]

Destination	Availability
Wired Extension	✔
PS	✔*
Incoming Call Distribution Group	✔
PS Ring Group	
Floating Extension no. for SVM	
VM Group (DTMF/DPT)	
External Pager (TAFAS)	
DISA	
Analogue/ISDN Remote Maintenance	
Idle Line Access no. + Phone no.	
Trunk Group Access no. + Trunk Group no. + Phone no.	
Other PBX Extension (TIE with no PBX Code)	
Other PBX Extension (TIE with PBX Code)	

*: A PS destination can be used to forward fax calls to a fax machine at another PBX connected by TIE line. A virtual PS can be specified as the destination of fax calls. Then, the extension number of the fax machine at the other PBX can be specified as the FWD—ALL Calls destination for calls to that virtual PS. (→ 1.25.6 Virtual PS)

Conditions

- **Hardware Requirement:** An MSG card
- This feature is only effective for calls arriving on DISA lines.
- If a fax signal is not detected before the DISA Intercept Routing—No Dial timer expires, the call is redirected to the operator extension, and fax detection ends.

Installation Manual References

2.5.4 MSG2 Card (KX-TDA3191)

Programming Manual References

PC Programming Manual

2.11.4 [5-3-2] Voice Message—DISA Message—Fax Extension (KX-TDA30 only)

PT Programming Manual

None

Feature Guide References

1.17.6 Direct Inward System Access (DISA)

3.2 Exclusive Features Table

1.17.8 Built-in Simplified Voice Message (SVM)

Description

Installing an optional Simplified Voice Message (SVM) card in the PBX allows the PBX to provide answering machine features.
This feature is only available for the KX-TDA30.

Features for an extension user with a message box:
An extension user can record a personal greeting message to greet a caller and ask him to leave a voice message. The user can also play back and clear greeting messages and the voice messages left by callers.

Feature for a caller:
A caller can leave a voice message after hearing the greeting message.

Up to two SVM cards can be installed in the PBX. Each card is assigned a floating extension number (default: 591 for SVM card 1, and 592 for SVM card 2). A card has two channels, allowing two users to access a single card at the same time.
When an extension is assigned to an SVM card through system programming, a message box is created for that extension. This message box is used to store greeting messages and voice messages for the extension. Each PT, SLT, and PS can be assigned its own message box.

[Example]

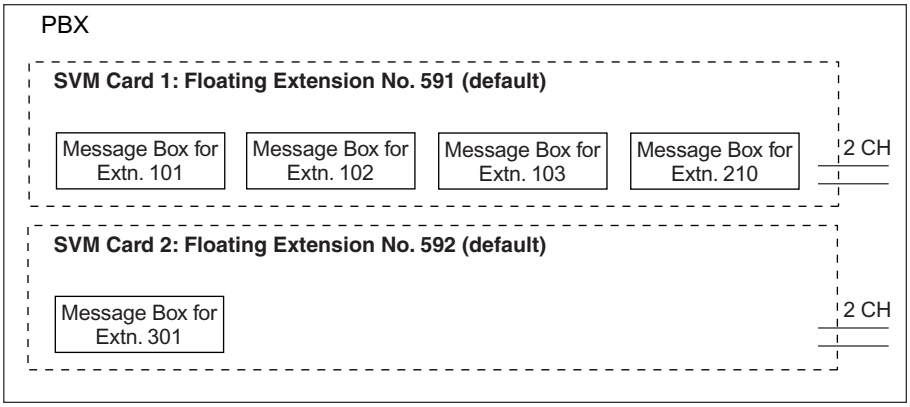

Message Recording Limit

Up to 125 messages (greeting messages and voice messages for extensions) with a maximum total recording time of 60 minutes (default) can be recorded per card. This memory is shared between the message boxes of all extensions assigned to that card. The recording quality, which can be selected through system programming, determines the total recording time as follows:

Recording Quality	Recording Time
High	about 40 minutes
Middle (default)	about 60 minutes
Low	about 120 minutes

If the sum length of all recorded voice messages exceeds 90 % of total space on the SVM card, or 115 or more voice messages have been recorded on the card, the display informs all extension users belonging to that card that the card is almost full. Users will hear dial tone 3 when going off-hook.

Floating Extension No. and Destination

An extension user can set incoming calls to be redirected to his message box on the SVM card when he cannot answer them. The user can set the floating extension number of the SVM card as the destination for redirected calls. Then, the SVM card answers redirected calls, plays back the relevant greeting message, and records a voice message. Incoming calls can be redirected to an SVM card by the following methods:

– Call Forwarding (FWD) (→ 1.3.1.2 Call Forwarding (FWD))

– Intercept Routing—No Answer/Busy/DND (→ 1.1.1.6 Intercept Routing)

[Programming Example for Intercept Routing]

Extension No.	Assigned SVM Card No.	Intercept Destination			
		Day	Lunch	Break	Night
101	1	102	**591**	**591**	**591**
102	1	103	**591**	**591**	**591**
301 (Operator)	2	–	–	–	**591**

In this example:

If a call is received at extension 101 and cannot be answered:

a) In day mode: the call will be redirected to extension 102.

b) In lunch/break/night mode: the call will be redirected to the SVM card, and a voice message will be recorded to the message box.

If a call is received at extension 301 (operator), the call will only be redirected to the SVM card in night mode.

If both FWD and Intercept Routing features are set for an extension, the FWD setting has priority. So, for example, it is possible for extension 101 to temporarily set FWD settings from his extension to forward calls to an SVM card even during day mode.

Greeting Message for Each Time Mode

When a call is redirected to the SVM card, the caller hears the designated greeting message. In addition to the normal greeting message, an extension user can record a different greeting message for each time mode (day/lunch/break/night) (→ 2.2.4 Time Service).

[Recording Example]

- Normal Greeting Message: "You have reached John. I am sorry I cannot take your call right now. Please leave a message."
- Greeting Message for lunch mode: "You have reached John. I am sorry I am out for lunch right now. Please leave a message."

If both the greeting message for a certain time mode and the normal greeting message have been recorded, callers will hear the greeting message for that time mode. However, if no greeting message has been recorded for a certain time mode, the normal greeting message will be played instead.
If neither the normal greeting message nor the greeting message for a certain time mode have been recorded, incoming calls will not be redirected to the SVM card in that time mode. For example, if a greeting message has only been recorded for night mode, and no normal greeting message has been recorded, incoming calls can only be redirected to an SVM card in night mode. No incoming calls will be redirected to the SVM card in day/lunch/break mode.

Direct Recording

An extension user can leave a voice message directly in the message box of an extension. In this case, the target extension will not ring. It is also possible to transfer a caller directly to the message box of an extension.

Message Notification

If a new voice message has been left in a message box, and distinctive dial tones are enabled, the user will hear dial tone 4 when going off-hook. If a message box contains only voice messages that have previously been listened to, dial tone 2 is heard instead. In addition, if the user's telephone has a Message button or Message/Ringer Lamp, the corresponding button or lamp will light when a voice message has been left. Pressing the lit button while on-hook shows the caller's information.

SVM Log

When a caller leaves a voice message on an SVM card, the following information is also recorded (as available):

a. Caller's Name

b. Caller's Telephone Number

c. Time recording started

d. Voice Message Status

- "New" is displayed for voice messages which have not previously been listened to.
- "Old" is displayed for voice messages which have previously been listened to.

This information can be viewed with the display of a PT or PS.
Please note that the information shown on the display may vary depending on the information that was received and the type of telephone used. Only users of a 6-line display PT can view all of the above information.

Checking Voice Messages Left by Callers

When an extension user accesses his message box, the most recent unplayed voice message is played first. When one voice message finishes playing, the next most recent voice message will begin playing automatically. After the last voice message in a message box has finished playing, the voice messages will begin playing from the most recent voice message again. When all voice messages have been played this time, the extension user will hear dial tone 4, and the line will be disconnected automatically.

SVM Remote Access from Trunk

An extension user can remotely access his message box through a trunk by calling his own extension and using the Walking COS feature. This allows the user to, for example, check the voice messages left in his message box when he is out of the office.

Accessing the Message Box of Another Extension

An extension user can access the message box of another extension by using the Walking COS feature to, for example, record a greeting message in a message box for an Incoming Call Distribution (ICD) Group as described below.
In addition, if the user's telephone has a Message button for another extension, the user can easily access the message box of that extension and listen to the voice messages left by callers.

Message Box for Incoming Call Distribution (ICD) Group

When a call is redirected to an SVM card from an ICD Group using Intercept Routing—Overflow (→ 1.2.2.6 Overflow Feature) or Call Forwarding (FWD), the greeting message for the first extension assigned to that ICD Group will be played, and the voice message from the caller will be recorded in that extension's message box.
A virtual PS can be assigned as the first extension of the ICD Group. This provides the ICD Group with a dedicated message box that is not shared with an actual extension. (→ 1.25.6 Virtual PS)

Conditions

[General]

- **Hardware Requirement:** An SVM card
- The maximum number of voice messages (not including greeting messages) that can be recorded for an extension can be set between 1 and 100 through system programming. (Default: 10)
- It is not possible to back up the SVM Log, recorded voice messages or greeting messages. If the PBX is initialised, all this information is cleared.
- When the card to which an extension belongs is changed through system programming, all the recorded voice messages and greeting messages for the extension will be cleared.
- The voice messages for an extension will be cleared when the extension is checked out using the Hospitality feature (→ 1.27.1 Hospitality Features—SUMMARY). However, greeting messages will not be cleared.
- An extension is able to receive calls even while a voice message is being recorded in that extension's message box.
- If an extension user tries to access a card that two users are already accessing, the user will hear a busy tone.
- If an extension user tries to clear a voice message shown on the display while the message box is already in use, the extension user will hear a notification tone.
- Voice message recording will stop when:
  a) a caller hangs up.
  b) the recording time for the voice message reaches the preprogrammed limit. (Default: 120 seconds)
  c) the recording space for the SVM card reaches the limit.
  In cases b) and c), the caller will hear a notification tone, and the line will be disconnected.
- New voice messages cannot be recorded in a message box when:
  a) the total recording time or number of voice messages for the SVM card exceeds the limit.
  b) the number of voice messages for an extension exceeds the limit.
  c) the destination of a call has been changed more than once.
  d) the desired message box is already in use by another user.
  e) a call is received at an ICD Group, and the message box of the first extension assigned to that group is not available, or no extension is assigned as the first member of the group.
- **Recording Greeting Messages**
  If an extension user tries to record a new greeting message to his message box when the card is already full, the user will hear a reorder tone.
- **Display Lock**
  A display PT user can lock the SVM Log display to prevent the user's information from being viewed and voice messages from being played back at any extension through personal programming (Display Lock). In this case, the Incoming/Outgoing Call Log displays and the Personal Speed Dialling number display are also locked. An extension personal identification number (PIN) (→ 1.28.1 Extension Personal Identification Number (PIN)) is required to lock/unlock the display.

[SVM Remote Access from Trunk]

- Whether Walking COS is available or not can be set through system programming.
  If the PBX uses analogue trunks, it is strongly recommended to prohibit Walking COS access. If an extension user who is accessing his message box through an analogue line goes on-hook while the voice messages are being played, the line will remain connected until all voice messages finish playing. This is because a reorder tone cannot be detected from an analogue line while playing voice messages.

- The first digit of the Walking COS feature number must be entered before the greeting message finishes playing.
- An extension user can only access the message box of another extension belonging to the card that the user accesses first. For example, if the user accesses a message box belonging to SVM card 1 first, then the user can only access the message boxes of other extensions belonging to SVM card 1. If the user tries to access the message box of another extension belonging to a different card, the user will hear a reorder tone.
  While a reorder tone is heard, it is possible to retry another call by pressing "✳".
- **Accessing the Message Box of Another Extension**
  Listening to voice messages left by callers using a Message button for another extension is available only when voice messages have been left in the message box.
- It is not recommended to record music when creating a greeting message.
- The SVM card does not answer calls that are forwarded using the Call Forwarding by QSIG feature (1.30.4.3 Call Forwarding (CF)—by QSIG).

Installation Manual References

2.5.5 SVM2 Card (KX-TDA3192)

Programming Manual References

PC Programming Manual

2.4.5 Tool—Simplified Voice Message—Delete All Recordings (KX-TDA30 only)
2.4.6 Tool—Simplified Voice Message—Check Current Usage (KX-TDA30 only)
2.8.4 [2-3] Timers & Counters—Miscellaneous
→SVM—Recording Time (KX-TDA30 only)
→SVM—Dial Tone Continuous Time (KX-TDA30 only)
2.8.8 [2-6-1] Numbering Plan—Main—Features—Simplified Voice Message Access (KX-TDA30 only)
2.9.1 [3-1-1] Trunk Group—TRG Settings—Tone Detection
→Simplified Voice Message Tone Detection—Silence (KX-TDA30 only)
→Simplified Voice Message Tone Detection—Continuous (KX-TDA30 only)
→Simplified Voice Message Tone Detection—Cyclic (KX-TDA30 only)
2.10.1 [4-1-1] Wired Extension—Extension Settings—Option 6—Display Lock / SVM Lock (KX-TDA30 only)
2.10.9 [4-1-7] Wired Extension—Simplified Voice Message (KX-TDA30 only)
2.10.10 [4-2-1] Portable Station—Extension Settings—Option 6—SVM Lock (KX-TDA30 only)
2.10.16 [4-2-5] Portable Station—Simplified Voice Message (KX-TDA30 only)
2.11.3 [5-3-1] Voice Message—DISA System
→Recording Mode
→Remote Access
2.11.5 [5-3-3] Voice Message—SVM (KX-TDA30 only)

PT Programming Manual

None

Feature Guide References

1.9.5 Walking COS
1.29.1 Dial Tone

3.1 Capacity of System Resources
3.2 Exclusive Features Table

User Manual References

1.6.2 Using Voice Messaging (Built-in Simplified Voice Message [SVM]) (KX-TDA30 only)
3.1.2 Settings on the Programming Mode

1.17.9 External Sensor

Description

External sensing devices, such as security alarms or smoke detectors, can be connected to the PBX. When the PBX receives input from a sensor, a call is made to the preset destination, alerting the extension user.

The available destinations of a sensor call are as follows:

[Available Destinations]

Destination	Availability
Wired Extension (PT/SLT/ISDN Extension/T1-OPX)	✔
PS	✔
Incoming Call Distribution Group	
PS Ring Group	
Floating Extension no. for SVM	
VM Group (DTMF/DPT)	
External Pager (TAFAS)	
DISA	
Analogue/ISDN Remote Maintenance	
Idle Line Access no. + Phone no.	
Trunk Group Access no. + Trunk Group no. + Phone no.	
Other PBX Extension (TIE with no PBX Code)	
Other PBX Extension (TIE with PBX Code)	

When the call is answered, if distinctive dial tones are enabled, dial tone 3 is heard, and continues until the user goes on-hook. If the sensor call is not answered within a specified time, the call will be cancelled. It is possible to set a different ring tone pattern for calls received from each external sensor, to distinguish between them.

Conditions

- **Hardware Requirement:**
  KX-TDA30: An external sensor and DPH card
  KX-TDA100/KX-TDA200/KX-TDA600: An external sensor, OPB card and EIO card
- Some devices may be unable to communicate correctly with the PBX. Confirm compatibility with the manufacturer of a device before installing it.
- After a sensor has been activated, the PBX will ignore any further alerts from the same sensor for the duration specified by a timer. This timer can be set separately for each sensor.
- As long as the previous sensor call is still being performed, any further alerts from the same sensor are ignored.
- The assigned sensor name and/or number are shown on the display of PTs and PSs when a sensor call is received.

- If the destination of a sensor call has set FWD, the sensor call will be redirected to the FWD destination. However, if the FWD destination is not supported as the destination of a sensor call (e.g., an outside party), the call will be received at the original destination. (→ 1.3.1.2 Call Forwarding (FWD))
- The following features cannot be used when a sensor call is received:
  - Alternate Receiving—Voice (→ 1.5.3 Intercom Call)
  - Hands-free Answerback (→ 1.4.1.4 Hands-free Answerback)
  - Consultation Hold/Call Hold (→ 1.13.1 Call Hold)
  - Call Transfer (→ 1.12.1 Call Transfer)
  - Executive Busy Override (→ 1.8.2 Executive Busy Override)
- Sensor call information is output on SMDR.

Installation Manual References

KX-TDA30

2.5.1 DPH4 Card (KX-TDA3161)

2.5.2 DPH2 Card (KX-TDA3162)

2.9.1 Connection of Doorphones, Door Openers, External Sensors, and External Relays

KX-TDA100/KX-TDA200

2.6.1 OPB3 Card (KX-TDA0190)

2.6.4 EIO4 Card (KX-TDA0164)

2.10.1 Connection of Doorphones, Door Openers, External Sensors, and External Relays

KX-TDA600

2.8.1 OPB3 Card (KX-TDA0190)

2.8.4 EIO4 Card (KX-TDA0164)

2.12.1 Connection of Doorphones, Door Openers, External Sensors, and External Relays

Programming Manual References

PC Programming Manual

2.7.39 [1-1] Slot—OPB (KX-TDA100/KX-TDA200/KX-TDA600 only)

→For Sensor (EIO)—Input Signal Decision Time

→For Sensor (EIO)—Input Signal Detection Reopening Time

2.7.43 [1-1] Slot—DPH Card Property (KX-TDA30 only)

→For Sensor (EIO)—Input Signal Decision Time

→For Sensor (EIO)—Input Signal Detection Reopening Time

2.8.4 [2-3] Timers & Counters—Miscellaneous—External Sensor—Ring Duration

2.8.16 [2-8-3] Ring Tone Patterns—Call from Others—External Sensor—Ring Tone Pattern Plan 1–8

2.11.7 [5-5] External Sensor

PT Programming Manual

None

1.17.10 External Relay Control

Description

By turning external device relays on and off, the PBX can control external devices such as alarms. When an extension user enters the External Relay Control feature number, the specified relay turns on for a preprogrammed length of time. When this timer expires, the relay turns off automatically. This gives the PBX simple control over other equipment, allowing an extension user to, for example, activate an alarm from his extension.
If the relay cannot be accessed (for example, because use is not permitted by COS, or the port is not in service), a reorder tone will be heard at the extension.

Conditions

- **Hardware Requirement:**
  KX-TDA30: An external relay device and DPH card
  KX-TDA100/KX-TDA200/KX-TDA600: An external relay device, OPB card and EIO card
- **KX-TDA30 only**
  The port of the DPH4 card to which the relay is connected must be assigned through system programming as a relay port (not a door opener port).
- Some devices may be unable to communicate correctly with the PBX. Confirm compatibility with the manufacturer of a device before installing it.
- Each external relay port has a COS assigned. This and the COS of an extension determine the extension users who can use External Relay Control.
- The length of time that a relay is turned on can be specified separately for each relay through system programming.
- If the same or another extension tries to access an external relay that has already been switched on, the timer for that relay is reset.

Installation Manual References

KX-TDA30

2.5.1 DPH4 Card (KX-TDA3161)

2.5.2 DPH2 Card (KX-TDA3162)

2.9.1 Connection of Doorphones, Door Openers, External Sensors, and External Relays

KX-TDA100/KX-TDA200

2.6.1 OPB3 Card (KX-TDA0190)

2.6.4 EIO4 Card (KX-TDA0164)

2.10.1 Connection of Doorphones, Door Openers, External Sensors, and External Relays

KX-TDA600

2.8.1 OPB3 Card (KX-TDA0190)

2.8.4 EIO4 Card (KX-TDA0164)

2.12.1 Connection of Doorphones, Door Openers, External Sensors, and External Relays

Programming Manual References

PC Programming Manual

2.7.39 [1-1] Slot—OPB (KX-TDA100/KX-TDA200/KX-TDA600 only)—For Output (EIO)—Device Type

2.7.43 [1-1] Slot—DPH Card Property (KX-TDA30 only)—For Output (EIO)—Device Type
2.8.8 [2-6-1] Numbering Plan—Main—Features—External Relay Access
2.8.11 [2-7-1] Class of Service—COS Settings—Extension Feature—External Relay Access
2.11.6 [5-4] External Relay

PT Programming Manual

None

Feature Guide References

2.2.1 Class of Service (COS)

User Manual References

1.10.2 If an External Relay is Connected

1.18 Caller ID Features

1.18.1 Caller ID

Description

The PBX receives caller information, such as the caller's name and telephone number, through the trunk. This information can then be shown on the displays of PTs, PSs, or SLTs that support FSK-type Caller ID. The PBX can modify a received number according to preprogrammed tables, so that an extension user can easily use the received number to call the caller back. For example, if an area code is not required to call outside destinations in a certain area, but received Caller ID numbers from that area contain an area code, it is possible to store that area code in a modification table so that it is deleted automatically from received numbers (Automatic Caller ID Number Modification).

1. Features

Caller ID includes the following features:

Feature	Description & Reference
Caller ID	Caller's information which is sent from **an analogue trunk**. The following Caller ID signalling types are supported: FSK and DTMF.
Calling Line Identification Presentation (CLIP)	Caller's information which is sent from **an ISDN line**. → 1.21.1.2 Calling/Connected Line Identification Presentation (CLIP/COLP)
Automatic Number Identification (ANI)	Caller's information which is sent from **an E1** or **T1 line**. → 1.22.1 E1 Line Service → 1.23.1 T1 Line Service

2. Service Features

Features	Description & Reference
Calling Line Identification (CLI) Distribution	Directs a DIL/DID/DDI/MSN call to a CLI destination if the caller's identification (Caller ID/CLIP/ANI) has been assigned to the Caller ID Table. → 1.1.1.5 Calling Line Identification (CLI) Distribution
Incoming Call Log	Caller's information is automatically recorded in the call log of the called extension. This information is used for confirming the caller, calling the caller back, and/or storing the number and name in the Personal Speed Dialling. → 1.18.2 Incoming Call Log

3. Number/Name Assignment

3.1 Automatic Caller ID Number Modification

This PBX automatically modifies the incoming caller's number according to preprogrammed tables. The modified number will be recorded for calling back.
This PBX supports 4 modification tables, each of which can be used for any number of trunk groups. Each table has 10 locations for local/international calls and one for long distance calls. The PBX checks the local/international call data first. If a match is not found, the long distance call data is applied.

[Example]

<Table Selection>

Trunk Group No.	Modification Table
1	1
2	3
:	:

<Modification Table>

Modification Table 1			
	Area Code	Removed No. of Digits	Added No.
Local/International Call Data 1	012	3	Blank
Local/International Call Data 2	00	2	001
:	:	:	:
Local/International Call Data 10			
Long Distance Call Data	Not programmable	0	0

Note

When caller's information is sent through an ISDN line and the call type is Subscriber, National, or International, the following modification table is used instead of the above table:

<Modification Table>

	Removed No. of Digits	Added No.
Subscriber Call Data	0	Blank
National Call Data	0	0
International Call Data	0	00

<Modification Flowchart>

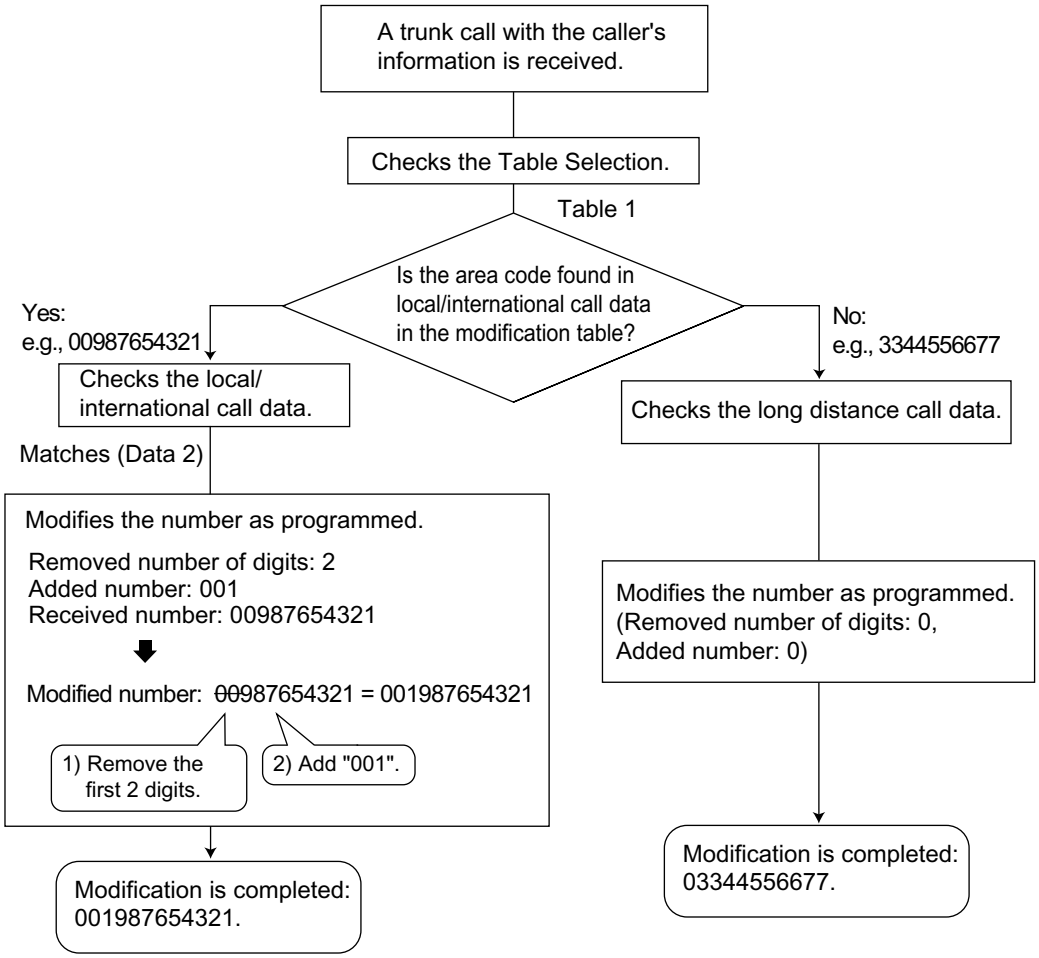

3.2 Caller ID Table Assignment

The System Speed Dialling Table is also used as the Caller ID Table.
In each location of the table, the following items can be assigned:

- **a)** Telephone number (Trunk Access number + caller's telephone number)
- **b)** System Speed Dialling name (caller's name)
  (shown on the display or SMDR)
- **c)** CLI destination
  (used for CLI feature)

When a caller's modified telephone number matches a telephone number (the Trunk Access number is disregarded.) in the table, the call is sent to the assigned CLI destination.

[Example]

Location (System Speed Dialling No.)	Telephone No.*1	System Speed Dialling Name*2	CLI Destination*3
000	90123456789	ABC Company	200
001	:	:	:
:	:	:	:

*1: → 2.12.1 [6-1] System Speed Dial—CO Line Access Number + Telephone Number
→ [001] System Speed Dialling Number
*2: → 2.12.1 [6-1] System Speed Dial—Name
→ [002] System Speed Dialling Name
*3: →2.12.1 [6-1] System Speed Dial—CLI Destination

3.3 Caller's Name Reference

A name can also be shown on the display or SMDR. The PBX searches for the name in the following order:

1) Personal Speed Dialling data of the original called extension
2) System Speed Dialling (Caller ID) Table
3) Caller ID name received from the public line (Caller ID Name Reference)

If the name is not found, it will not be displayed.

Conditions

[General]

- Caller ID signalling type can be selected through system programming.
- The Caller ID Name Reference is only available for calls from the public network.

[Caller ID to SLT Port]

- **Hardware Requirement:**
KX-TDA30: An EXT-CID card
KX-TDA100/KX-TDA200/KX-TDA600: An EXT-CID card installed on SLC8 card
- This feature complies with ETSI (European Telecommunications Standards Institute)-type FSK and Bellcore-type FSK.
- **KX-TDA30 only**
Through system programming, a group of four SLT or Super Hybrid ports can be assigned to receive Caller ID. Up to two groups can be programmed. Therefore, a maximum of eight SLTs can receive Caller ID.
Note that SLTs connected in parallel to DPTs attached to Super Hybrid ports can only receive Caller ID information when set to "ring" mode.
- When the caller's number is sent to an SLT, a Trunk Access number can be automatically added to the telephone number through system programming for calling back.
- When the caller's number exceeds 16 digits, the SLT receives only the first 16 digits, not counting the preceding Trunk Access number (if it is programmed to be added).
- If a call is transferred to an SLT, the transferring extension's information will be shown on the SLT. If the transferring extension goes on-hook before the call is answered, the original caller's information will be shown.
- When the Caller ID has information, such as private, out of area, or long distance, the information will be shown instead of the caller's number and name.
- Even if the caller's name is sent, the name may not be shown depending on the type of SLT.
- Incoming Call Log information is not shown on the SLT.

Programming Manual References

PC Programming Manual

2.8.4 [2-3] Timers & Counters—Miscellaneous

→Caller ID—Waiting to receive

→Caller ID—Visual Caller ID Display

2.8.17 [2-9] System Options—Option 4—Private Network—Public Call through Private Network—Minimum Public Caller ID Digits

2.8.18 [2-10] Extension CID Settings

2.9.1 [3-1-1] Trunk Group—TRG Settings—Main—Caller-ID Modification Table

2.10.1 [4-1-1] Wired Extension—Extension Settings—Option 7

→Extension Caller ID Sending

→Incoming Call Wait Timer for Extension Caller ID

2.12.1 [6-1] System Speed Dial

2.12.2 [6-2] Caller ID Modification

PT Programming Manual

[001] System Speed Dialling Number

[002] System Speed Dialling Name

[490] Caller ID Signal Type

Feature Guide References

1.6.1.5 Speed Dialling—Personal/System

1.26.1 Station Message Detail Recording (SMDR)

1.18.2 Incoming Call Log

Description

When an incoming public trunk call with the caller's information (e.g., Caller ID) is directed to an extension, the information is automatically recorded in the call log of the called extension. This information is shown on the telephone display and is used for confirming the caller, calling back, or storing the number and name in the Personal Speed Dialling.

[Example]

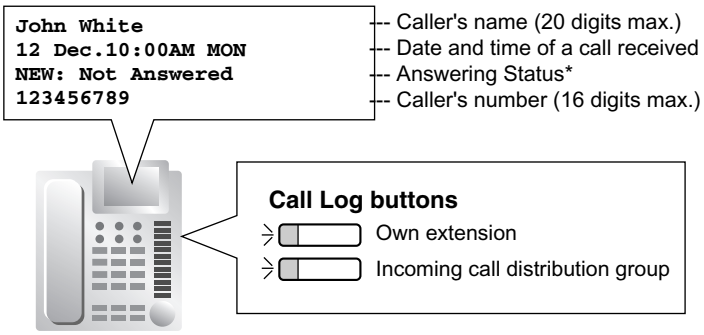

*: "NEW" is displayed for call records which have not previously been viewed;
"OLD" is displayed for call records which have previously been viewed.

Conditions

[General]

- **Call Log Button**
  A flexible button can be customised as the Call Log button for the extension or an incoming call distribution group. The button light shows the current status as follows:

Light pattern	Status
Red on	There is unchecked information.
Off	All information has been checked.

- **If the answering destination is not the original extension (FWD—No Answer, Intercept Routing—No Answer, Overflow, and Call Pickup):**
  If a call is forwarded because it is not answered or another extension picks up the call, the information is logged in the call logs of both the original destination and the answering destination. If a call is forwarded to several extensions before being answered, the information is logged in the call logs for all the extensions it was forwarded to. If a call is forwarded to an incoming call distribution group and is not answered, the information is not logged in the call log for the incoming call distribution group.
- **Call Log for PS Calls**
  If a PS or a CS is in one of the following situations when a call arrives, the information is logged in the call log for the PS:
  a) When the PS is out of range.
  b) When the PS is turned off.
  c) When the CS is busy.

- **Display Lock**
  An extension user can lock the Incoming Call Log display to prevent the call information from being viewed at any extension through personal programming (Display Lock). In this case, the Outgoing Call Log display, the Personal Speed Dialling number display and the SVM Log display are also locked and the voice messages in the user's message box cannot be played back. An extension personal identification number (PIN) is required to use this feature. (→ 1.28.1 Extension Personal Identification Number (PIN))
- **Storing the Call Log Information in Personal Speed Dialling**
  When storing the number and name into Personal Speed Dialling from the call log information, the Idle Line Access number is automatically attached to the telephone number.
- **Incoming Call Log Memory**
  The total memory for the Incoming Call Log is determined in the PBX. The maximum number that can be logged for each extension and incoming call distribution group is also determined through system programming. If the memory becomes full, the new call record overwrites the oldest one.
- **Call Log for Incoming Call Distribution Group Calls**
  If the original destination of a call is an incoming call distribution group, and the call is not answered, the information is logged in the call log for the group. If it is answered, the information is logged in the call log for the answering extension.

[MPR Software File Version 3.1000 or later]

- Through system programming, it is possible to select which Incoming Call Logs record call information when a member of an incoming call distribution group answers a call to the group:
  – Only the Incoming Call Log of the extension that answered the call.
  – Both the Incoming Call Log of the extension that answered the call and that of the incoming call distribution group.

Programming Manual References

PC Programming Manual

2.9.10 [3-5-1] Incoming Call Distribution Group—Group Settings—Group Log / Group FWD—Supervisor Extension Number

2.9.12 [3-5-3] Incoming Call Distribution Group—Miscellaneous—Options—Call Log to ICD Group for Answered Call (MPR Software File Version 3.1000 or later)

2.10.1 [4-1-1] Wired Extension—Extension Settings

→ Option 5—Incoming Call Display

→ Option 6—Incoming Call Log Lock (KX-TDA100/KX-TDA200/KX-TDA600 only)

→ Option 7—Incoming Call Log Memory

2.10.5 [4-1-4] Wired Extension—Flexible Button—Type

2.10.10 [4-2-1] Portable Station—Extension Settings

→ Option 5—Incoming Call Display

→ Option 7—Incoming Call Log Memory

2.10.17 [4-3] DSS Console—Flexible Button—Type

PT Programming Manual

None

Feature Guide References

1.6.1.5 Speed Dialling—Personal/System

1.20.2 Flexible Buttons

3.1 Capacity of System Resources

User Manual References

1.13.1 Using the Call Log
3.1.2 Settings on the Programming Mode

1.19 Message Features

1.19.1 Message Waiting

Description

An extension user can notify another extension user that he wishes to talk to the user. The notified extension user can return the call or listen to the messages recorded by the Voice Processing System (VPS) or Built-in Simplified Voice Message feature.

When a message is left on a PT, the Message button lights or the Message/Ringer Lamp turns on red, and a message is shown on the display of a display PT. Pressing the lit Message button while on-hook shows the caller's information as shown below:

[Example]

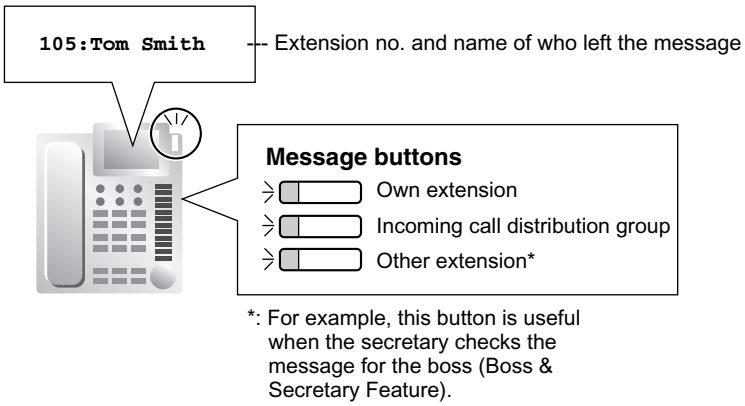

*: For example, this button is useful when the secretary checks the message for the boss (Boss & Secretary Feature).

Conditions

- **Message Button**
  A flexible button can be customised as the Message button for the extension, other extensions, or an incoming call distribution group.
- **Distinctive Dial Tone for Message Waiting**
  If the Distinctive Dial mode is enabled, dial tone 4 will be sent to an extension when a message has been left on the extension. (→ 1.29.1 Dial Tone)
- **SLT with a Message Waiting Lamp (KX-TDA100/KX-TDA200/KX-TDA600 only)**
  The lamp activates in the same way as the MESSAGE button on a PT, if an EMSLC or MSLC card is connected to the PBX. The Message Waiting Lamp light pattern can be selected from the 12 patterns shown below. System programming for each extension port is required to use this feature.

[SLT Message Waiting Lamp Light Patterns]

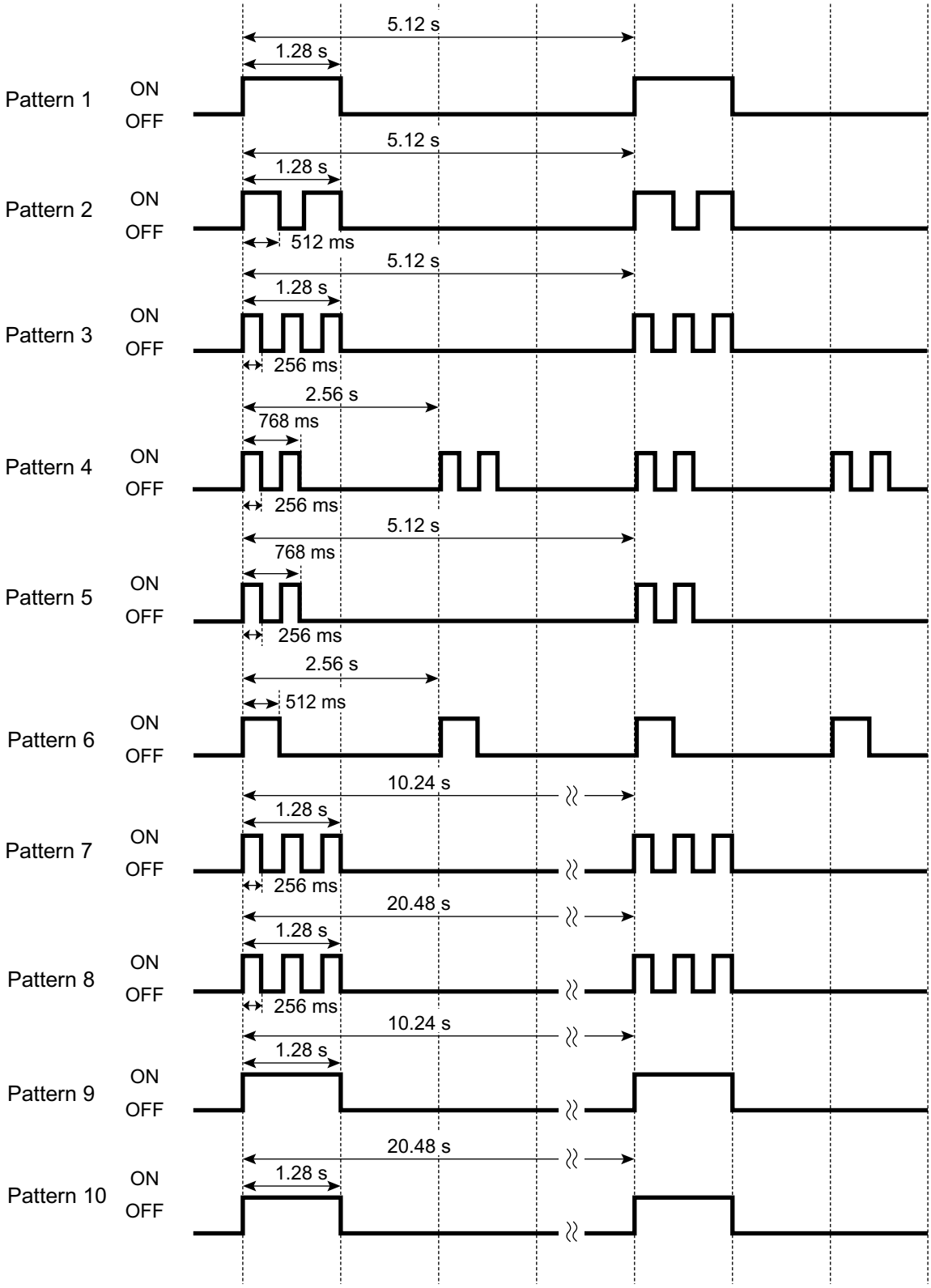

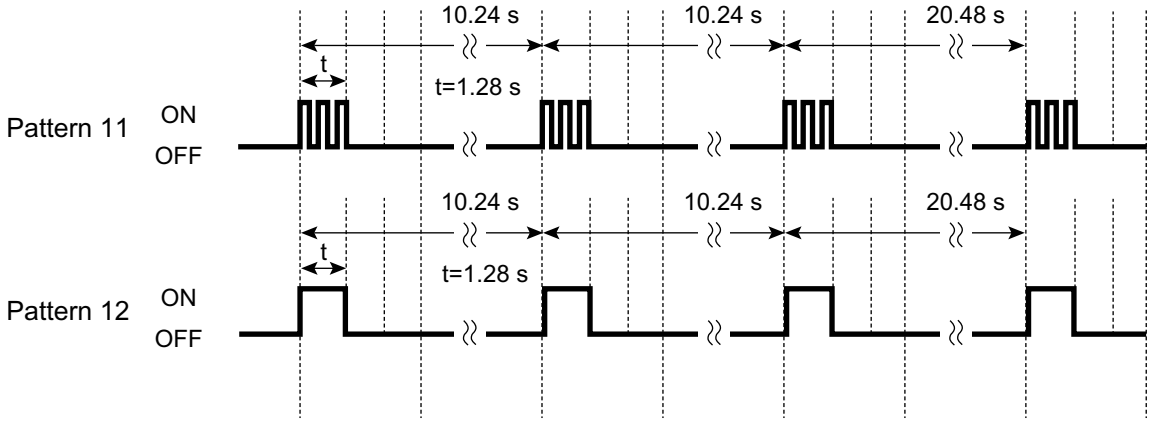

- It is possible to set Message Waiting while hearing a ringback tone, busy tone, or DND tone.
- Messages are always left on the original destination extension, regardless of that extension's FWD settings.
- Both the extension that sent and received a message waiting notification can cancel the left message.
- If the extension that received a notification calls back the extension that sent the notification, and the call is answered, the notification will be cleared automatically. However, if a voice message has been left on the VPS, whether the notification is cleared or not depends on the VPS settings.

Installation Manual References

KX-TDA100/KX-TDA200

2.5.7 SLC16 Card (KX-TDA0174) and MSLC16 Card (KX-TDA0175)

KX-TDA600

2.7.7 ESLC16 Card (KX-TDA6174) and EMSLC16 Card (KX-TDA6175)

Programming Manual References

PC Programming Manual

2.7.4 [1-1] Slot—Extension Card Property—SLT Power Supply (KX-TDA100/KX-TDA200/KX-TDA600 only)

2.8.8 [2-6-1] Numbering Plan—Main—Features—Message Waiting Set / Cancel / Call Back

2.8.10 [2-6-3] Numbering Plan—B/NA DND Call Feature—Message Waiting Set

2.8.17 [2-9] System Options

→ Option 3—Dial Tone—Distinctive Dial Tone

→ Option 5—SLT—SLT Message Waiting Lamp Pattern (KX-TDA100/KX-TDA200/KX-TDA600 only)

2.9.19 [3-8-1] VM(DTMF) Group—System Settings—VM DTMF Command—Listening Message

2.10.1 [4-1-1] Wired Extension—Extension Settings—Main—SLT MW Mode (KX-TDA100/KX-TDA200/KX-TDA600 only)

2.10.5 [4-1-4] Wired Extension—Flexible Button—Type

2.10.13 [4-2-3] Portable Station—Flexible Button—Type

2.10.17 [4-3] DSS Console—Flexible Button—Type

PT Programming Manual

None

Feature Guide References

1.20.2 Flexible Buttons
3.1 Capacity of System Resources

User Manual References

1.2.4 When the Dialled Line is Busy or There is No Answer
1.10.5 If a Voice Processing System is Connected

1.19.2 Absent Message

Description

An extension user can set or select a message (e.g., the reason for absence) to be displayed on his telephone. When a display PT user calls the extension, the message is shown on the caller's telephone.

The following messages can be programmed as desired:

Type	Message No.	Message (Example)	Description
System message	1	**`Will Return Soon`**	Messages may be edited through system programming. They are used for every extension user commonly.
	2	**`Gone Home`**	
	3	**`At Ext %%%%`** (Extension Number)	
	4	**`Back at %%:%%`** (Hour:Minute)	
	5	**`Out until %%/%%`** (Month/Day)	
	6	**`In a Meeting`**	
	7		
	8		
Personal message	9		A message is programmable at each extension through personal programming (Personal Absent Message), which can only be used by that extension user.

Note

The "%" means a parameter to be entered when assigning a message at an individual extension. Up to seven "%"s can be stored for each message.

Conditions

- An extension user can select only one message at a time. The selected message is displayed at the extension while on-hook.

Programming Manual References

PC Programming Manual

2.8.8 [2-6-1] Numbering Plan—Main—Features—Absent Message Set / Cancel

2.10.1 [4-1-1] Wired Extension—Extension Settings—Option 3—Absent Message

2.10.10 [4-2-1] Portable Station—Extension Settings—Option 3—Absent Message

2.12.5 [6-5] Absent Message

PT Programming Manual

[008] Absent Message

Feature Guide References

3.1 Capacity of System Resources

User Manual References

1.6.3 Showing a Message on the Caller's Telephone Display (Absent Message)
3.1.2 Settings on the Programming Mode

1.20 Proprietary Telephone (PT) Features

1.20.1 Fixed Buttons

Description

PTs, DSS Consoles, and Add-on Key Modules are provided with the following feature/Line Access buttons: Depending on your device type, some buttons may not be provided.
As for buttons on PSs, please refer to the Operating Instructions for each PS.

[PT and Add-on Key Module]

Button		Usage
Navigator Key, Jog Dial, Volume Key		Used to adjust the ringer, speaker, handset and headset volume and the display contrast. Navigator Key and Jog Dial can also be used to select data from the Call Directory and the System Feature Access Menu on the display.
ENTER		Used to confirm the selected item.
CANCEL		Used to cancel the selected item.
PROGRAM	*PROG.*	Used to enter and exit the programming mode.
FLASH/RECALL	R	Used to disconnect the current call and make another call without hanging up (Flash/Recall mode or Terminate mode) or used to send a flash/recall signal to the telephone company or host PBX to access their features (External Feature Access mode). This button can also be used as a CANCEL button while on-hook.
HOLD		Used to place a call on hold.

Button		Usage
SP-PHONE (Speakerphone)		Used for hands-free operation. Also used to switch between handset and hands-free operation.
MONITOR		Used for a hands-free dialling. Also used to monitor the party's voice in hands-free mode.
MESSAGE		Used to leave a message waiting indication or call back the party who left the message waiting indication.
REDIAL		Used to redial the last dialled number.
TRANSFER		Used to transfer a call to another party.
Flexible CO (Trunk)		Used to make or receive a trunk call or can be reassigned to a different Trunk Access button (Default: S-CO) or to another feature button.
INTERCOM	*INT'*	Used to make or receive intercom calls.
AUTO ANS (Auto Answer)/MUTE		Used to receive an incoming call in hands-free mode, or used for microphone or handset mute during a conversation. (Dual feature button)
VOICE CALL/MUTE		Used to monitor an intercom call automatically (a hands-free conversation is not possible). Also used for handset microphone mute during a conversation.
AUTO DIAL/STORE	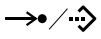	Used for System/Personal Speed Dialling and storing programme changes.
CONF (Conference)		Used to establish a multiple-party conversation.
FWD/DND	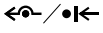	Used to perform FWD or DND. (Dual feature button)
PAUSE		Used to insert a pause in a stored number. With an APT, it is used as the PROGRAM button.
Soft		Used to select the item displayed on the bottom line of the display.
SELECT		Used to select the displayed item or to call the displayed number.
SHIFT		Used to access the second level of Soft button items.
MODE		Used to shift the display to access various features.

[DSS Console]

Button		Usage
ANSWER		Used to answer an incoming call or place the current call on hold and answer another call with one touch.
RELEASE		Used to disconnect the line during or after a conversation or to complete a Call Transfer.

Button	Usage
Flexible CO (Trunk)	Used to make or receive a trunk call or can be reassigned to a different trunk or to another feature button.
Flexible DSS (Direct Station Selection)	Used to access an extension with one touch. Every button is programmed to correspond to an extension. DSS buttons can also be reassigned to other features.
PF (Programmable Feature)	Used to access a preprogrammed feature with one touch. (no default)

Conditions

- Certain buttons are equipped with a light to show line or feature status.

1.20.2 Flexible Buttons

Description

Flexible buttons are customised by either system or personal programming. The following types of flexible buttons are provided on PTs, DSS Consoles, Add-on Key Modules, and/or PSs:

a) Flexible CO buttons

b) Flexible Direct Station Selection (DSS) buttons

c) Programmable Feature (PF) buttons

[Button Usage]

Button	Usage
Single-CO (S-CO)	Used to access a specified trunk for making or receiving calls.
Group-CO (G-CO)	Used to access an idle trunk in a specified trunk group for making calls. Incoming calls from trunks in the assigned trunk group arrive at this button.
Loop-CO (L-CO)	Used to access an idle trunk for making calls. Incoming calls from any trunk arrive at this button.
Direct Station Selection (DSS)	Used to access an extension with one touch.
Network Direct Station Selection (NDSS)	Used to access an extension at another PBX within the same network.
One-touch Dialling	Used to access a preprogrammed party or feature with one touch.
Incoming Call Distribution (ICD) Group	Used to access a specified incoming call distribution group for making or receiving calls.
Message	Used to leave a message waiting indication or call back the party who left the message waiting indication.
FWD/DND (External/Internal/ Both) *	Used to perform the FWD or DND feature for the extension. The feature is applied to trunk calls, intercom calls, or both.
Group FWD (External/Internal/ Both)	Used to perform the FWD feature for a specified incoming call distribution group. The feature is applied to trunk calls, intercom calls, or both.
Account Code Entry (Account)	Used to enter an account code.
Conference	Used to establish a multiparty conversation.
Terminate	Used to disconnect the current call and make another call without hanging up.
External Feature Access (EFA)	Used to send a flash/recall signal to the telephone company or host PBX to access their features.
Charge Reference	Used to check the total call charge for your own extension.
Call Park	Used to park or retrieve a call in a preset PBX parking zone.
Call Park (Automatic Park Zone)	Used to park a call in an idle PBX parking zone automatically.
Call Log	Used to show the incoming call information.

Button	Usage
Log-in/Log-out *	Used to switch between log-in and log-out mode.
Hurry-up	Used to redirect the longest waiting call in the queue of an incoming call distribution group to the overflow destination.
Wrap-up *	Used to switch the Wrap-up/Not Ready and Ready modes.
System Alarm	Used to confirm a PBX error.
Time Service *	Used to switch the assigned time modes: day, lunch, break or night. Also used to check the current time mode status.
Answer	Used to answer an incoming call.
Release	Used to disconnect the line during or after a conversation, or to complete a Call Transfer.
Toll Restriction/Call Barring	Used to change the TRS/Barring level of other extension users temporarily.
ISDN Service	Used to access an ISDN service.
Calling Line Identification Restriction (CLIR) *	Used to switch between the CLIP and CLIR service.
Connected Line Identification Restriction (COLR) *	Used to switch between the COLP and COLR service.
ISDN Hold	Used to transfer a call using the telephone company.
Headset	Used to turn on/off the headset mode while idle. Used to switch between hands-free mode and headset modes during a conversation.
Time Service Switching Mode (Automatic/Manual) *	Used to switch between the Automatic Switching and Manual Switching mode.
Two-way Record	Used to record a conversation into your own mailbox.
Two-way Transfer	Used to record a conversation into the mailbox of a specified extension.
One-touch Two-way Transfer	Used to record a conversation into the mailbox of a specified extension with one touch.
Live Call Screening (LCS)	Used to monitor your own voice mailbox while an incoming caller is leaving a message and, if desired, intercept the call.
Voice Mail (VM) Transfer	Used to transfer a call to the mailbox of a specified extension.
Check-in	Used to switch the status of extensions from Check-out to Check-in.
Check-out	Used to switch the status of extensions from Check-in to Check-out.
CTI	Used to access CTI features.
Primary Directory Number (PDN)	Used to make and receive both outside and intercom calls. (→ 1.7.1 Primary Directory Number (PDN)/Secondary Directory Number (SDN) Extension)

Button	Usage
Secondary Directory Number (SDN)	Used to show the current status of another extension, call the extension, and pick up or transfer calls to it. (→ 1.7.1 Primary Directory Number (PDN)/Secondary Directory Number (SDN) Extension)

*: **One-touch Feature Setting Buttons:** Pressing these buttons while on-hook changes the feature settings. The new mode will be displayed for a preprogrammed time period.

Conditions

- The Flexible DSS button lights of the KX-T7040 and KX-T7240 show only "Off" or "Red On". If the button is customised as a button which shows other light patterns, the other light patterns also show only as "Red On".

Programming Manual References

PC Programming Manual

2.8.4 [2-3] Timers & Counters—Miscellaneous—PT Display—PT Last Display Duration in Idle Mode

2.10.5 [4-1-4] Wired Extension—Flexible Button

2.10.6 [4-1-4] Wired Extension—Flexible Button—Flexible Button Data Copy

2.10.7 [4-1-5] Wired Extension—PF Button

2.10.13 [4-2-3] Portable Station—Flexible Button

2.10.17 [4-3] DSS Console—Flexible Button

PT Programming Manual

None

User Manual References

3.1.3 Customising the Buttons

1.20.3 LED Indication

Description

The LED (Light Emitting Diode) of the Message/Ringer Lamp and following buttons (Line Status Buttons and Corresponding Extension Status Button) show line conditions with a variety of light patterns.
Line Status Buttons: S-CO, G-CO, L-CO, INTERCOM, ICD Group, PDN
Corresponding Extension Status Button: DSS, SDN

1. **Light Pattern of the Message/Ringer Lamp**

   [DPT]
   - Incoming call from a trunk: Red flashing
   - Incoming call from another extension: Green flashing
   - Message(s) present (no incoming call): Red on
   - No message(s) present (no incoming call): Off

   [APT]
   - Incoming call: Red flashing
   - Message(s) present (no incoming call): Red on
   - No message(s) present (no incoming call): Off

2. **Light Pattern of the Line Status Buttons**

<table>
<tr><th rowspan="3">Light Pattern</th><th colspan="5">Line Status Button</th></tr>
<tr><th colspan="3">Trunk Status</th><th>Intercom Line Status</th><th>Incoming Call Distribution Group Line Status</th></tr>
<tr><th>S-CO</th><th>G-CO</th><th>L-CO</th><th>INTERCOM</th><th>ICD Group</th></tr>
<tr><td>Off</td><td colspan="5">Idle</td></tr>
<tr><td>Green on</td><td colspan="5">This extension is using the line.</td></tr>
<tr><td>Slow green flashing</td><td colspan="5">This extension is holding the line.</td></tr>
<tr><td>Moderate green flashing</td><td colspan="5">This extension is holding the line using Exclusive Hold or using the line for an Unattended Conference.</td></tr>
<tr><td>Rapid green flashing</td><td>Incoming call/ Privacy Release</td><td colspan="4">Incoming call</td></tr>
<tr><td>Red on</td><td>Incoming call for another extension/ Another extension is using the line/ Another extension has the line on Exclusive Hold.</td><td>Other extensions are using all trunks in the trunk group.</td><td>—</td><td colspan="2">This extension is logged out of the incoming call distribution group.</td></tr>
</table>

Light Pattern	Line Status Button				
	Trunk Status			Intercom Line Status	Incoming Call Distribution Group Line Status
	S-CO	G-CO	L-CO	INTERCOM	ICD Group
Slow red flashing	Another extension is holding the line.	—			
Rapid red flashing	Incoming call to the incoming call distribution group in Ring distribution method			—	

For information on the light patterns of PDN and SDN buttons, refer to 1.7.1 Primary Directory Number (PDN)/Secondary Directory Number (SDN) Extension.

3. Light Pattern of the Corresponding Extension Status Button

Light Pattern	Corresponding Extension Status Button (DSS)
Off	Idle
Red on	Busy/Incoming call*1/DND for trunk calls
Rapid red flashing	Incoming call*2

*1: Only when Call Pickup by a DSS button is disabled.

*2: Only when Call Pickup by a DSS button is enabled.

4. Flashing Light Patterns

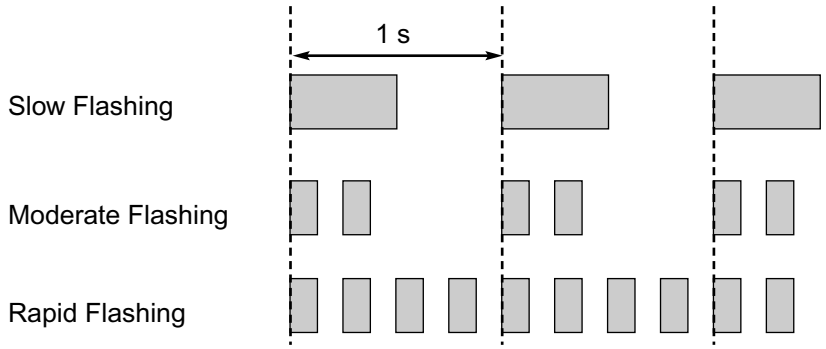

Conditions

- The incoming call shows on the buttons in the following priority:
  ICD Group→S-CO→G-CO→L-CO→PDN→INTERCOM
- The light pattern of a DSS button for incoming call can be set to "Off" through system programming. In this case, the DSS button light will not indicate the status of the corresponding extension.

Programming Manual References

PC Programming Manual

2.8.17 [2-9] System Options

→ Option 1—PT Fwd / DND—Fwd LED

→ Option 1—PT Fwd / DND—DND LED

→ Option 4—DSS Key—DSS Key mode for Incoming Call

PT Programming Manual

None

Feature Guide References

1.2.2.2 Group Call Distribution

1.2.2.7 Log-in/Log-out

1.3.1 Call Forwarding (FWD)/Do Not Disturb (DND)

1.13.1 Call Hold

1.14.1.2 Conference

1.14.1.3 Privacy Release

1.20.4 Display Information

Description

A display PT shows the user the following information while making or receiving calls if they are available:

Display Item	Display Example	Condition
The extension number and name of the calling or called extension, or incoming call distribution group	`123: Tom Smith`	–
Status of the called extension	`123: Busy`	–
The number and name of the optional device	`Door 02: 1st Door`	–
The dialled telephone number	`1234567890`	–

The received call information
a) Caller's name
b) Caller's number
c) Trunk number/name
d) Original Destination, if the call is forwarded
e) DDI/DID/MSN name or number
	`ABC Company`
	`12345678`
	`Line 001: Sales`
	`→102:Mike`
	
	`Panasonic`
		The first line message can be either (a), (c), or (e) at each extension through system programming.

Call charge fee during a trunk call.	`12.35€`	The currency, position of the currency symbol, and the decimal point are programmable.
Call duration during a trunk call.	`Line 001 11:02'28`	–

Conditions

- **Multilingual Display**
  Each extension can select its display language through personal programming (Display Language Selection).
- **Display Contrast**
  It is possible to adjust the display contrast through personal programming (Display Contrast Selection). This is available only for DPTs.
- **Display Backlight**
  Each extension can select its display backlight on or off through personal programming (Display Backlight Selection). This is available for the KX-T7633, KX-T7636 and IP-PTs.
- Characters (name) or digits (number) exceeding the display's size limitation are not displayed. In this case, information which have been programmed is hidden, but not altered.

Programming Manual References

PC Programming Manual

2.8.17 [2-9] System Options—Option 5—PT Feature Access—No. 1–8

2.10.1 [4-1-1] Wired Extension—Extension Settings

→ Option 4—Display Language

→ Option 5—Incoming Call Display

→ Option 5—Automatic LCD Switch when Start Talking

2.10.10 [4-2-1] Portable Station—Extension Settings

→ Option 4—Display Language

→ Option 5—Incoming Call Display

→ Option 5—Automatic LCD Switch when Start Talking

2.12.9 [6-8] Hotel & Charge—Charge

→ Charge Options—Digits After Decimal Point

→ Charge Options—Currency

→ Charge Options—Currency Display Position

2.16.1 [10-1] CO Line Settings—CO Name

PT Programming Manual

[130] Decimal Point Position for Currency

[131] Currency

User Manual References

3.1.2 Settings on the Programming Mode

1.21 Integrated Services Digital Network (ISDN) Service Features

1.21.1 Integrated Services Digital Network (ISDN)

1.21.1.1 Integrated Services Digital Network (ISDN)—SUMMARY

Description

ISDN is a digital switching and transmission network. ISDN transmits voice, data, and image in digital format. ISDN lines, if available, can be connected to public line (trunk), private line (QSIG), or ISDN terminal devices (extension).

1. ISDN Interface and Configuration

Interface Type	Description	Port Mode	Configuration Type*3
Basic Rate Interface (BRI)	Provides two 64 kbps B channels for communication and one 16 kbps D channel for signalling (2B + D).	Trunk, Extension*1	Point-to-Point/Point-to-multipoint
		QSIG (Master, Slave)*1	Point-to-Point
Primary Rate Interface (PRI)	Provides thirty or twenty-three 64 kbps B channels for communication and one 64 kbps D channel for signalling (30B + D/ 23B + D).	Trunk, QSIG (Master, Slave), Extension*2	Point-to-Point

*1: → 2.7.14 [1-1] Slot—BRI Port—Main—Port Type
*2: → 2.7.16 [1-1] Slot—PRI Port (KX-TDA100/KX-TDA200/KX-TDA600 only)—Main—Port Type
*3 For BRI only:
→ 2.7.14 [1-1] Slot—BRI Port—Network—Access Mode
→ [426] BRI Configuration

Note

Point-to-Point (P-P):
One ISDN terminal device can be connected to one ISDN port.

Point-to-multipoint (P-MP):
A maximum of eight ISDN terminal devices can be connected to one ISDN port.

2. ISDN Supplementary Service Table for Public Network

Service	Description & Reference
Direct Dialling In (DDI)	Directs a call with a DDI number to a preprogrammed destination. (P-P only) → 1.1.1.3 Direct Inward Dialling (DID)/Direct Dialling In (DDI)
Multiple Subscriber Number (MSN)	One ISDN port can support a maximum of 10 MSNs for routing incoming calls. (P-MP only) → 1.1.1.4 Multiple Subscriber Number (MSN) Ringing Service
Calling Line Identification Presentation (CLIP)	Sends the caller's telephone number to the network when making a call. The called party can see the number on his telephone display before answering the call. → 1.21.1.2 Calling/Connected Line Identification Presentation (CLIP/COLP)
Connected Line Identification Presentation (COLP)	Sends the telephone number of the answered party to the network when answering a call. The caller can see the number on his telephone display when the line is connected. → 1.21.1.2 Calling/Connected Line Identification Presentation (CLIP/COLP)
Calling Line Identification Restriction (CLIR)	Prevents the caller's CLI being presented to the called party by the caller. → 1.21.1.2 Calling/Connected Line Identification Presentation (CLIP/COLP)
Connected Line Identification Restriction (COLR)	Prevents COLP being sent by the answered party. → 1.21.1.2 Calling/Connected Line Identification Presentation (CLIP/COLP)
Subaddressing (SUB)	You may add digits after the telephone number. These digits will be passed to ISDN terminal device.
User-to-user Signalling Type 1 (UUS-1)	Transmits a specified volume of the data through the D channel between the ISDN terminal devices of different PBXs using UUS types 1.
Advice of Charge (AOC)	The PBX can receive the call charge information on ISDN lines from the telephone company. → 1.21.1.3 Advice of Charge (AOC)

Service	Description & Reference
Call Forwarding (CF)—by ISDN	Forwards an incoming call to another outside party using the ISDN service of the telephone company. → 1.21.1.4 Call Forwarding (CF)—by ISDN (P-MP) → 1.21.1.5 Call Forwarding (CF)—by ISDN (P-P)
Call Hold (HOLD)—by ISDN	Puts one ISDN call on hold. → 1.21.1.6 Call Hold (HOLD)—by ISDN
Call Transfer (CT)—by ISDN	Transfers an ISDN call to an outside party. Call Transfer with Announcement and Call Transfer without Announcement are available. → 1.21.1.7 Call Transfer (CT)—by ISDN
Three-party Conference (3PTY)—by ISDN	Establishes a three-party conference call using the ISDN service of the telephone company. → 1.21.1.8 Three-party Conference (3PTY)—by ISDN
Malicious Call Identification (MCID)	An extension user can ask the telephone company to trace a malicious caller. Information on the malicious call will be received later on. → 1.21.1.9 Malicious Call Identification (MCID)
Completion of Calls to Busy Subscriber (CCBS)	If an outside called party is busy, an extension can receive callback ringing when the called party becomes free. → 1.21.1.10 Completion of Calls to Busy Subscriber (CCBS)

3. ISDN Centrex Service

An extension user can have access to the features of the ISDN Centrex Service of the telephone company (e.g., Call Transfer). This is used by putting the current ISDN call on hold by sending a flash/recall signal. This feature is enabled or disabled for each ISDN port.

→ 2.7.14 [1-1] Slot—BRI Port—ISDN CO—ISDN Centrex
→ 2.7.16 [1-1] Slot—PRI Port (KX-TDA100/KX-TDA200/KX-TDA600 only)—CO Setting—ISDN Centrex

4. Private Networking Connection (QSIG)

Private networking with QSIG is possible using an ISDN line. The QSIG mode, Master or Slave, can be enabled on an ISDN port basis.

5. ISDN Extension (→ 1.21.1.11 ISDN Extension)

An ISDN (BRI/PRI) port can be used for extension connection. While the extension connection is enabled, ISDN terminal devices (e.g., ISDN telephone, G4 fax machine, PC) or a behind PBX can be connected to the port.
When the ISDN port is in P-P configuration, one ISDN terminal device can be connected to the port.

When the ISDN port is in P-MP configuration, a maximum of eight ISDN terminal devices can be connected to the port. However, only a maximum of two devices can be used simultaneously.

Conditions

- **Overlap/En bloc**
  For each ISDN port, either Overlap or En bloc can be selected as the dialling method for which the PBX sends telephone numbers to the telephone company. The selected dialling method must be offered by the telephone company. When "**Overlap**" is selected, the PBX sends each dialled digit individually. When "**En bloc**" is selected, the PBX sends all of the dialled digits at once.
  → 2.7.14 [1-1] Slot—BRI Port—ISDN CO—ISDN Outgoing Call Type
  → 2.7.16 [1-1] Slot—PRI Port (KX-TDA100/KX-TDA200/KX-TDA600 only)—CO Setting—ISDN Outgoing Call Type

  In En bloc mode, the PBX recognises that the user is finished dialling when:
  – the # key is pressed (programmable).
    → 2.8.17 [2-9] System Options—Option 2—ISDN en Bloc Dial—[#] as End of Dial for en Bloc mode
  – the dialled number is a preprogrammed telephone number.
    → 2.12.7 [6-7] Dialling Plan
  – the inter-digit timer expires.
    → 2.8.4 [2-3] Timers & Counters—Dial / IRNA / Recall / Tone—Dial—Extension Inter-digit
- Some supplementary services are provided by the key protocol (→ 1.21.1.12 ISDN Service Access by Keypad Protocol).
- **Extension Number**
  An extension number can be assigned to each ISDN port.
  → 2.10.1 [4-1-1] Wired Extension—Extension Settings—Main—Extension Number
- **Network Type (BRI only)**
  Each BRI port can be set to the requirements of each country/area.
  → 2.7.14 [1-1] Slot—BRI Port—Network—Network Type
  → [420] BRI Network Type
- **L1 Active Mode and L2 Data Link Mode (BRI only)**
  The active mode of Layer 1 (L1) and the data link mode of Layer 2 (L2) can be selected individually (Permanent or Call by Call) on an ISDN port basis.
  2.7.14 [1-1] Slot—BRI Port—Network
  → L1 Mode
  → L2 Mode
  → [425] BRI Layer 2 Active Mode
- **TEI Assignment Mode (BRI only)**
  The Terminal Endpoint Identifier (TEI) assignment mode can be selected on an ISDN port basis
  → 2.7.14 [1-1] Slot—BRI Port—Network—TEI Mode
  → [427] BRI TEI Mode
- **Bearer Mode**
  The bearer mode can be assigned on an extension basis.
  → 2.10.1 [4-1-1] Wired Extension—Extension Settings—Option 6—ISDN Bearer
  → 2.10.10 [4-2-1] Portable Station—Extension Settings—Option 6—ISDN Bearer
- **Automatic ISDN Configuration**
  ISDN (BRI) port configuration can be set automatically through system programming.
  → 2.4.2 Tool—BRI Automatic Configuration
  The following items will be set by making and receiving a call using the subscriber number assigned for each ISDN (BRI) port:
  – L1 Active Mode

- L2 Data Link Mode
- Access Mode (Point-to-Point/Point-to-Multipoint)
- TEI Assignment Mode (Fix 00–63/Automatic)

Programming Manual References

PC Programming Manual

2.4.2 Tool—BRI Automatic Configuration
2.7.13 [1-1] Slot—BRI/PRI Card Property
2.7.14 [1-1] Slot—BRI Port
2.7.15 [1-1] Slot—BRI Port—Port Command
2.7.16 [1-1] Slot—PRI Port (KX-TDA100/KX-TDA200/KX-TDA600 only)
2.7.17 [1-1] Slot—PRI Port—Port Command (KX-TDA100/KX-TDA200/KX-TDA600 only)
2.8.4 [2-3] Timers & Counters—Dial / IRNA / Recall / Tone—Dial—Extension Inter-digit
2.8.17 [2-9] System Options—Option 2—ISDN en Bloc Dial—[#] as End of Dial for en Bloc mode
2.10.1 [4-1-1] Wired Extension—Extension Settings
→ Main—Extension Number
→ Option 6—ISDN Bearer
2.10.10 [4-2-1] Portable Station—Extension Settings—Option 6—ISDN Bearer
2.12.8 [6-7] Dialling Plan—Auto Assign

PT Programming Manual

[420] BRI Network Type
[424] BRI Layer 1 Active Mode
[425] BRI Layer 2 Active Mode
[426] BRI Configuration
[427] BRI TEI Mode

Feature Guide References

1.30.4 QSIG Standard Features

1.21.1.2 Calling/Connected Line Identification Presentation (CLIP/COLP)

Description

Calling Line Identification Presentation (CLIP):
The PBX can send a preprogrammed telephone number to the network when an extension user makes a call. The called party can see the number on his telephone display before answering the call.

Connected Line Identification Presentation (COLP):
The PBX sends a preprogrammed telephone number to the network when the extension user answers an incoming call. The caller can see the number of the answering party on his telephone display when the call is answered.

[CLIP Example]

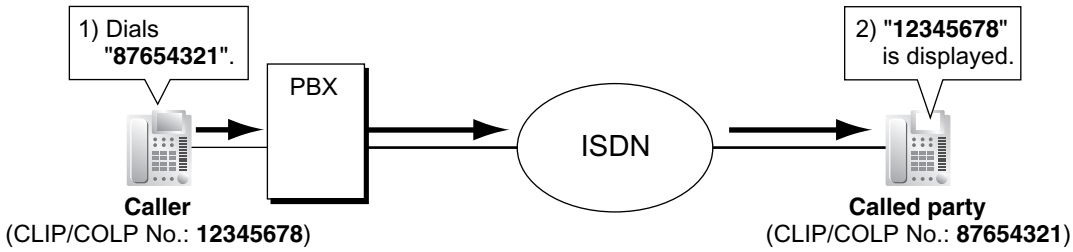

[COLP Example]

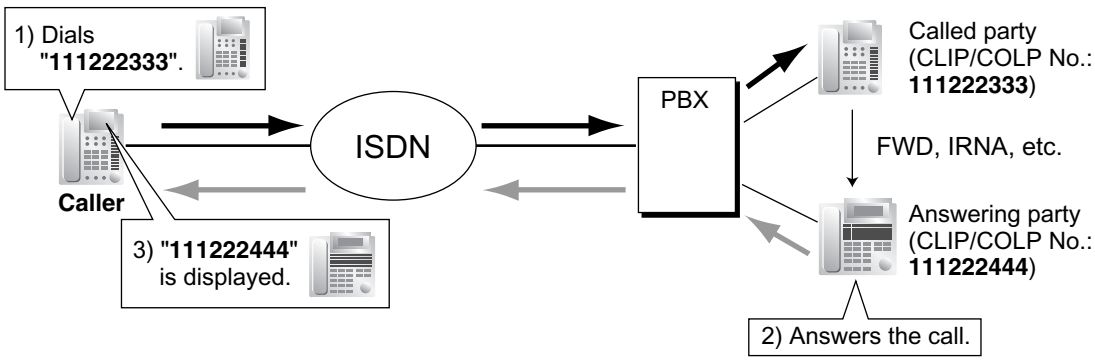

CLIP/COLP Number:
The telephone numbers sent to the network for CLIP/COLP can be assigned as follows:

- CLIP/COLP number for each ISDN port (subscriber's number).
- CLIP/COLP number for each extension.
- CLIP/COLP number for each incoming call distribution group.

Each extension can select either the CLIP/COLP number for the ISDN port or the extension to be used. The CLIP/COLP number for the incoming call distribution group is used when making a call by pressing the ICD Group button or receiving a call which arrives at the ICD Group button.

Calling/Connected Line Identification Restriction (CLIR/COLR):
It is possible for each extension to restrict the sending of its telephone number to the network by pressing the CLIR button, COLR button, or entering the feature number.

Conditions

- The availability of this feature is dependent on the contract with the telephone company.
- CLIP/COLP features comply with the following European Telecommunication Standard (ETS) specifications:
  – ETS 300 092 Calling Line Identification Presentation (CLIP) supplementary service.
  – ETS 300 097 Connected Line Identification Presentation (COLP) supplementary service.
- CLIR/COLR features comply with the following European Telecommunication Standard (ETS) specifications:
  – ETS 300 093 Calling Line Identification Restriction (CLIR) supplementary service.
  – ETS 300 098 Connected Line Identification Restriction (COLR) supplementary service.
- The CLIP/COLP number for the connected ISDN port can be used for the ISDN terminal devices which cannot be assigned their own CLIP/COLP number, such as a doorphone.
- **COLP/CLIR/COLR Assignment for Each Port**
  Each service can be enabled or disabled on each ISDN port of the PBX.
- **CLIR Button and COLR Button**
  It is possible to switch between CLIP and CLIR by pressing the CLIR button, and COLP and COLR by pressing the COLR button. A flexible button can be customised as the CLIR or COLR button.
- The CLIP/COLP number must match the telephone number provided by the telephone company. Otherwise it will be ignored or replaced by another number.
- When using a private network, the extension number assigned for each extension through system programming is sent for CLIP/COLP. (→ 1.30.4.2 Calling/Connected Line Identification Presentation (CLIP/COLP) and Calling/Connected Name Identification Presentation (CNIP/CONP)—by QSIG)

Programming Manual References

PC Programming Manual

2.7.14 [1-1] Slot—BRI Port
→ ISDN CO—Subscriber Number
→ Supplementary Service—COLP, CLIR, COLR, CNIP, CONP, CNIR, CONR, CF (Rerouting), CT, CCBS, AOC-D, AOC-E, 3PTY

2.7.16 [1-1] Slot—PRI Port (KX-TDA100/KX-TDA200/KX-TDA600 only)
→ CO Setting—Subscriber Number
→ Supplementary Service—COLP, CLIR, COLR, CNIP, CONP, CNIR, CONR, CF (Rerouting), CT, CCBS, AOC-D, AOC-E, 3PTY

2.7.19 [1-1] Slot—T1 Port (KX-TDA100/KX-TDA200/KX-TDA600 only)—Subscriber Number

2.7.25 [1-1] Slot—E1 Port—Subscriber Number

2.8.8 [2-6-1] Numbering Plan—Main—Features
→ COLR Set / Cancel
→ CLIR Set / Cancel
→ Switch CLIP of CO Line / Extension

2.8.17 [2-9] System Options—Option 4—Send CLIP of CO Caller to ISDN—when Transfer (CLIP of Held Party)

2.9.10 [3-5-1] Incoming Call Distribution Group—Group Settings—Main—CLIP on ICD Group Button

2.10.1 [4-1-1] Wired Extension—Extension Settings
→ Main—Extension Number
→ Option 1—CLIP ID
→ Option 3—CLIP on Extension/CO

→ Option 3—CLIR
→ Option 3—COLR
2.10.5 [4-1-4] Wired Extension—Flexible Button—Type
2.10.10 [4-2-1] Portable Station—Extension Settings
→ Option 1—CLIP ID
→ Option 3—CLIP on Extension/CO
→ Option 3—CLIR
→ Option 3—COLR
2.10.13 [4-2-3] Portable Station—Flexible Button—Type
2.10.17 [4-3] DSS Console—Flexible Button—Type

PT Programming Manual

[003] Extension Number
[422] BRI Subscriber Number
[606] CLIP/COLP Number

Feature Guide References

1.20.2 Flexible Buttons

User Manual References

1.8.4 Displaying Your Telephone Number on the Called Party and Caller's Telephone (Calling/Connected Line Identification Presentation [CLIP/COLP])
1.8.5 Preventing Your Telephone Number Being Displayed on the Caller's Telephone (Connected Line Identification Restriction [COLR])
1.8.6 Preventing Your Number Being Displayed on the Called Party's Telephone (Calling Line Identification Restriction [CLIR])

1.21.1.3 Advice of Charge (AOC)

Description

The PBX can receive the call charge information on ISDN lines from the telephone company.
There are the following types:

Type	Description
Advice of Charge During Call (AOC-D)	AOC is received during the call and when the call is completed.
Advice of Charge At End of Call (AOC-E)	AOC is received when the call is completed.

Conditions

- This feature complies with the following European Telecommunication Standard (ETS) specification:
  – ETS 300 182 Advice of Charge (AOC) supplementary service Digital Subscriber Signalling System No. One (DSS1) protocol.
- A DPT user can see the call charge information on the display during the call.
- **Budget Management**
  If the amount of call charge reaches the preprogrammed limit, an extension user cannot make further calls. (→ 1.9.2 Budget Management)
- **AOC for ISDN extension**
  An ISDN extension also receives AOC.

Programming Manual References

PC Programming Manual

2.7.14 [1-1] Slot—BRI Port—Supplementary Service—COLP, CLIR, COLR, CNIP, CONP, CNIR, CONR, CF (Rerouting), CT, CCBS, AOC-D, AOC-E, 3PTY

2.7.16 [1-1] Slot—PRI Port (KX-TDA100/KX-TDA200/KX-TDA600 only)—Supplementary Service—COLP, CLIR, COLR, CNIP, CONP, CNIR, CONR, CF (Rerouting), CT, CCBS, AOC-D, AOC-E, 3PTY

PT Programming Manual

None

1.21.1.4 Call Forwarding (CF)—by ISDN (P-MP)

Description

An extension user can forward the incoming ISDN call to another outside party using the ISDN service of the telephone company, instead of the PBX feature, when the call is received through an ISDN line. Extension users can set the forward destination to the network on an MSN basis. The setting must have been done beforehand to use this feature. There are the following types:

Type	Description
Call Forwarding—Unconditional (CFU)	Incoming calls are forwarded unconditionally.
Call Forwarding—Busy (CFB)	An incoming call is forwarded when the destination in the PBX is busy.
Call Forwarding—No Reply (CFNR)	An incoming call is forwarded when the destination in the PBX does not answer within a preprogrammed time period.

When the CFB or CFNR has been set, the network determines to forward the incoming call to the preprogrammed destination after the call reached the PBX once. When the CFU has been set, the network forwards the call directly to the preprogrammed destination.

[Example]

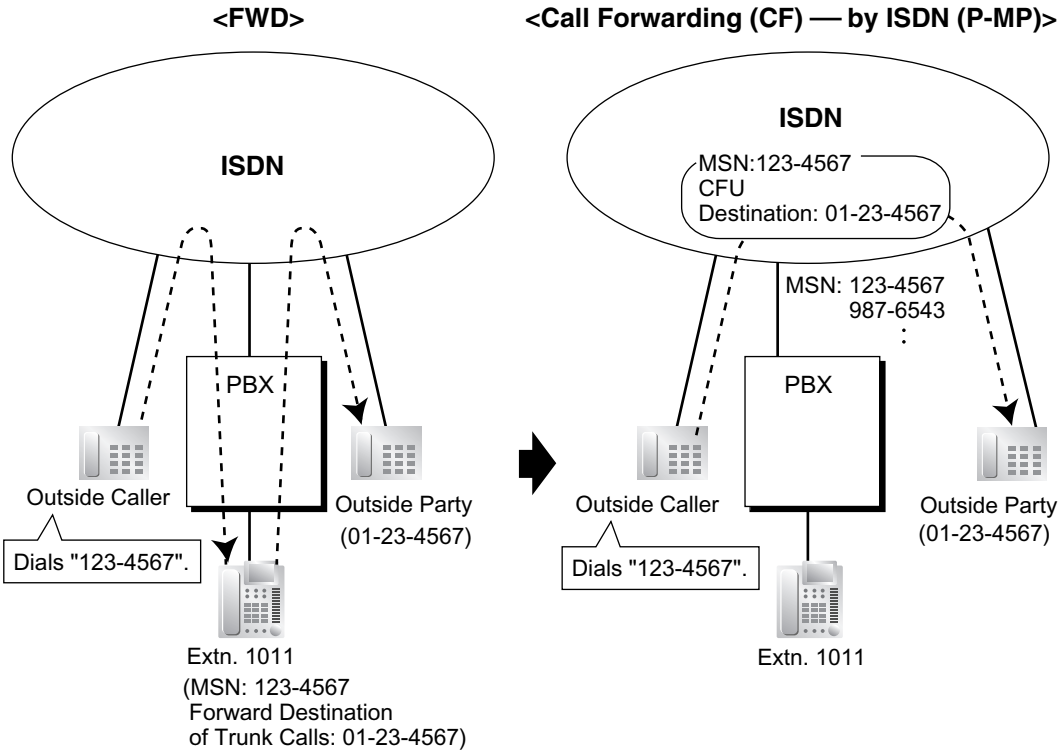

Conditions

- This feature complies with the following European Telecommunication Standard (ETS) specification:
  - ETS 300 207 Diversion supplementary service.
- The availability of this feature is dependent on the contract with the telephone company.
- The feature requires the MSN service. (→ 1.1.1.4 Multiple Subscriber Number (MSN) Ringing Service)

- COS programming determines the extensions that are able to use this feature.

Programming Manual References

PC Programming Manual

2.8.8 [2-6-1] Numbering Plan—Main—Features—ISDN-FWD (MSN) Set / Cancel / Confirm

2.8.11 [2-7-1] Class of Service—COS Settings—CO & SMDR—CF (MSN)

PT Programming Manual

None

Feature Guide References

1.3.1.2 Call Forwarding (FWD)

2.2.1 Class of Service (COS)

User Manual References

1.6.1 Forwarding Calls

1.21.1.5 Call Forwarding (CF)—by ISDN (P-P)

Description

An extension user can forward the incoming ISDN call to another outside party using the ISDN service of the telephone company, instead of the PBX feature, when the call is received through an ISDN line.
The network directly forwards the call to the destination which the extension user has set in the PBX as the forward destination of trunk calls; the network is instructed by the PBX. This feature is available only when the call is received through an ISDN port which supports this feature.

Call Forwarding—Unconditional (CFU), Call Forwarding—Busy (CFB), and Call Forwarding—No Reply (CFNR) are applied to this feature.

[Example]

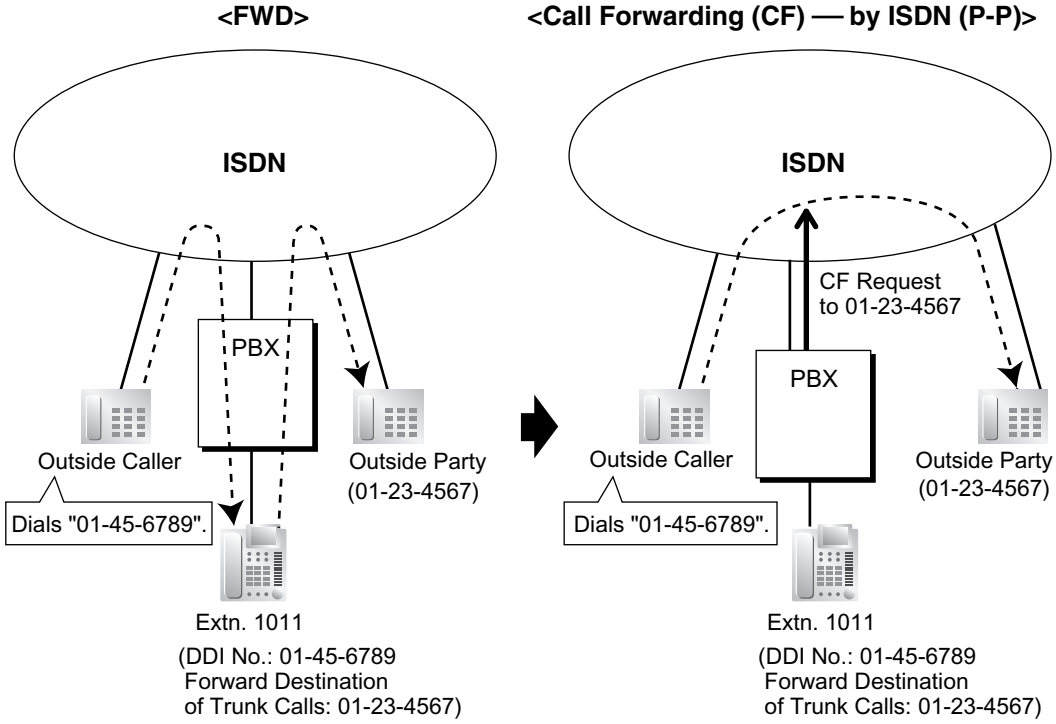

Conditions

- This feature complies with the following European Telecommunication Standard (ETS) specification:
  - ETS 300 207 Diversion supplementary service.
- The availability of this feature is dependent on the contract with the telephone company.
- This feature can be enabled or disabled on each ISDN port of the PBX.
- This feature is available when the same trunk group is used for the incoming call and the forwarded call.

Programming Manual References

PC Programming Manual

2.7.14 [1-1] Slot—BRI Port—Supplementary Service—COLP, CLIR, COLR, CNIP, CONP, CNIR, CONR, CF (Rerouting), CT, CCBS, AOC-D, AOC-E, 3PTY

2.7.16 [1-1] Slot—PRI Port (KX-TDA100/KX-TDA200/KX-TDA600 only)—Supplementary Service—COLP, CLIR, COLR, CNIP, CONP, CNIR, CONR, CF (Rerouting), CT, CCBS, AOC-D, AOC-E, 3PTY

2.8.8 [2-6-1] Numbering Plan—Main—Features—ISDN-FWD (MSN) Set / Cancel / Confirm
2.8.11 [2-7-1] Class of Service—COS Settings—CO & SMDR—CF (MSN)

PT Programming Manual

None

Feature Guide References

1.3.1.1 Call Forwarding (FWD)/Do Not Disturb (DND)—SUMMARY
1.3.1.2 Call Forwarding (FWD)

User Manual References

1.6.1 Forwarding Calls

1.21.1.6 Call Hold (HOLD)—by ISDN

Description

An ISDN call can be put on hold using the ISDN service of the telephone company, instead of the PBX feature. This can be a part of a Call Transfer (CT)—by ISDN (→ 1.21.1.7 Call Transfer (CT)—by ISDN) and Three-party Conference (3PTY)—by ISDN (→ 1.21.1.8 Three-party Conference (3PTY)—by ISDN). This feature allows an ISDN call to be held, and a call to be made to another outside party using only one communication channel of ISDN. A PT user can easily use this feature by pressing the ISDN Hold button.

Conditions

- This feature complies with the following European Telecommunication Standard (ETS) specification:
  – ETS 300 141 Call Hold (HOLD) supplementary service.
- **ISDN Hold Button**
  A flexible button can be customised as the ISDN Hold button.
- The availability of this feature is dependent on the contract with the telephone company.
- The TRS/Barring feature is applied when making a call after activating this feature. (→ 1.9.1 Toll Restriction (TRS)/Call Barring (Barring))
- ARS cannot be applied to the call dialled after activating this feature. (→ 1.10.1 Automatic Route Selection (ARS))
- It is impossible to seize any other trunk during this feature.

Programming Manual References

PC Programming Manual

2.8.8 [2-6-1] Numbering Plan—Main—Features—ISDN Hold

2.10.5 [4-1-4] Wired Extension—Flexible Button—Type

2.10.13 [4-2-3] Portable Station—Flexible Button—Type

2.10.17 [4-3] DSS Console—Flexible Button—Type

PT Programming Manual

None

Feature Guide References

1.20.2 Flexible Buttons

1.21.1.7 Call Transfer (CT)—by ISDN

Description

An ISDN call can be transferred to an outside party using the ISDN service of the telephone company, instead of the PBX feature, without occupying a second ISDN line.

Conditions

- This feature complies with the following European Telecommunication Standard (ETS) specification:
  – ETS 300 369 Explicit Call Transfer (ECT) supplementary service.
- The availability of this feature is dependent on the contract with the telephone company.
- This feature can be enabled or disabled on an ISDN port basis.
- If an ISDN port is in P-P configuration, this feature can be used only when the network supports the "explicit linkage" option.
- Call Transfer with Announcement and Call Transfer without Announcement is possible. (→ 1.12.1 Call Transfer)
- The call charges after completing this feature will not be recorded by the PBX.

Programming Manual References

PC Programming Manual

2.7.14 [1-1] Slot—BRI Port—Supplementary Service—COLP, CLIR, COLR, CNIP, CONP, CNIR, CONR, CF (Rerouting), CT, CCBS, AOC-D, AOC-E, 3PTY

2.7.16 [1-1] Slot—PRI Port (KX-TDA100/KX-TDA200/KX-TDA600 only)—Supplementary Service—COLP, CLIR, COLR, CNIP, CONP, CNIR, CONR, CF (Rerouting), CT, CCBS, AOC-D, AOC-E, 3PTY

PT Programming Manual

None

User Manual References

1.4.1 Transferring a Call (Call Transfer)

1.21.1.8 Three-party Conference (3PTY)—by ISDN

Description

During a conversation using an ISDN line, an extension user can add another party and establish a three-party conference call using the ISDN service of the telephone company, instead of the PBX feature.

Conditions

- This feature complies with the following European Telecommunication Standard (ETS) specification:
  – ETS 300 188 Three-Party (3PTY) supplementary service.
- The availability of this feature depends on the contract with the telephone company.
- This feature can be enabled or disabled on an ISDN port basis.

Programming Manual References

PC Programming Manual

2.7.14 [1-1] Slot—BRI Port—Supplementary Service—COLP, CLIR, COLR, CNIP, CONP, CNIR, CONR, CF (Rerouting), CT, CCBS, AOC-D, AOC-E, 3PTY

2.7.16 [1-1] Slot—PRI Port (KX-TDA100/KX-TDA200/KX-TDA600 only)—Supplementary Service—COLP, CLIR, COLR, CNIP, CONP, CNIR, CONR, CF (Rerouting), CT, CCBS, AOC-D, AOC-E, 3PTY

PT Programming Manual

None

User Manual References

1.4.5 Multiple Party Conversation

1.21.1.9 Malicious Call Identification (MCID)

Description

An extension user can ask the telephone company to trace a malicious caller during a call or while hearing reorder tone after the caller hangs up. Information on the malicious call will be received later on.

Conditions

- This feature complies with the following European Telecommunication Standard (ETS) specification:
  – ETS 300 130 Malicious Call Identification (MCID) supplementary service.

Programming Manual References

PC Programming Manual

2.8.8 [2-6-1] Numbering Plan—Main—Features—MCID

PT Programming Manual

None

User Manual References

1.3.6 Identifying Malicious Calling Parties (Malicious Call Identification [MCID])

1.21.1.10 Completion of Calls to Busy Subscriber (CCBS)

Description

If the called party is busy and the call has been made using an ISDN line, an extension user can set to receive callback ringing when the called party becomes free. When the user answers the callback ringing, that party's number is automatically dialled.

Conditions

- This feature complies with the following European Telecommunication Standard (ETS) specification:
  - ETS 300 359 Completion of Calls to Busy Subscriber (CCBS) supplementary service.
- This feature is available under the following conditions:
  a) The caller's PBX is capable of using CCBS and the service is provided by the network.
  b) The called party's PBX is capable of accepting CCBS.
- To receive and send CCBS, receiving and sending CCBS must be enabled individually on an ISDN port basis through system programming.
- An extension user can set only one CCBS. The last setting is effective.
- The CCBS setting is cancelled if there is no callback ringing within 60 minutes or callback ringing is not answered within 10 seconds.
- If an extension user makes a call using the CCBS feature, the preassigned CLIP number for the extension will be used even though the extension has set CLIR or the extension has used the CLIP for the incoming call distribution group by pressing the ICD Group button when the CCBS has set. (→ 1.21.1.2 Calling/Connected Line Identification Presentation (CLIP/COLP))
- After using the CCBS feature, using Last Number Redial will not retrieve the number dialled by CCBS. (→ 1.6.1.4 Last Number Redial)
- An extension user that has set the CCBS feature cannot receive callback ringing while the extension is holding a call.

Programming Manual References

PC Programming Manual

2.7.14 [1-1] Slot—BRI Port—Supplementary Service
→ COLP, CLIR, COLR, CNIP, CONP, CNIR, CONR, CF (Rerouting), CT, CCBS, AOC-D, AOC-E, 3PTY
→ CCBS Option

2.7.16 [1-1] Slot—PRI Port (KX-TDA100/KX-TDA200/KX-TDA600 only)—Supplementary Service
→ COLP, CLIR, COLR, CNIP, CONP, CNIR, CONR, CF (Rerouting), CT, CCBS, AOC-D, AOC-E, 3PTY
→ CCBS Type
→ CCBS delete digits

PT Programming Manual

None

User Manual References

1.2.4 When the Dialled Line is Busy or There is No Answer

1.21.1.11 ISDN Extension

Description

An ISDN (BRI/PRI) port can be used for either trunk or extension connection. When extension connection is enabled, ISDN terminal devices (e.g., ISDN telephone, G4 fax machine, PC) or a behind PBX can be connected to the port.
If the ISDN port is in point-to-point (P-P) configuration, one terminal device can be connected to the port. If the ISDN port is in point-to-multipoint (P-MP) configuration, a maximum of eight terminal devices can be connected to the port. However, only a maximum of two devices can be used simultaneously.
Individual terminal devices on a behind PBX can be addressed with Multiple Subscriber Number (MSN). The MSN consists of the ISDN extension number and an additional digit, 0 through 9 or 00 through 99.

[Example]

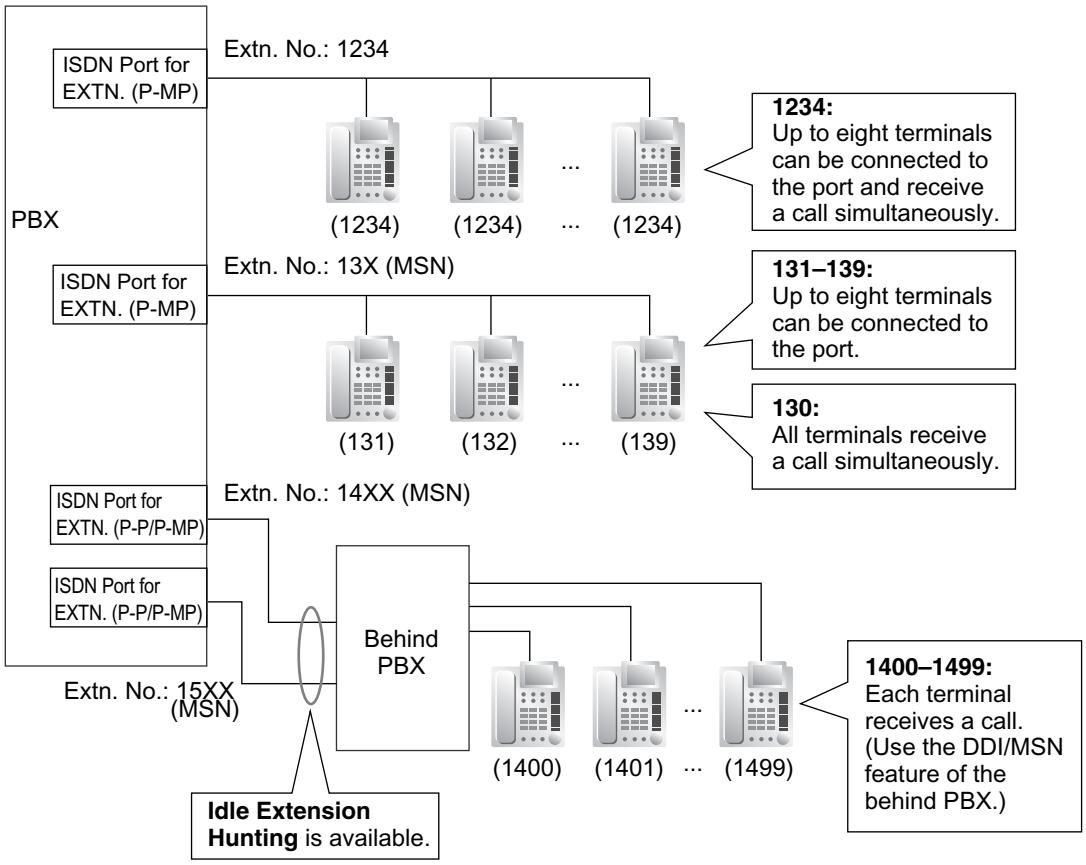

Conditions

- **Subaddressing**
  Subaddressing is possible between ISDN terminal devices. The subaddress goes through the PBX to the ISDN terminal devices directly.
- Call Transfer (PBX feature) is available only for ISDN extensions in P-MP configuration. (→ 1.12.1 Call Transfer)

- ISDN extensions can belong to an incoming call distribution group (→ 1.2.2 Incoming Call Distribution Group Features) or idle extension hunting group (→ 1.2.1 Idle Extension Hunting). In this case, an MSN can be assigned.
- If the last digit of the MSN is "0", all terminal devices on the same ISDN port receive the call simultaneously, if the specification of each terminal device is available. To use the MSN whose last digit is "0" as an individual MSN, system programming is required for each ISDN port.

Programming Manual References

PC Programming Manual

2.7.14 [1-1] Slot—BRI Port—ISDN Extension

2.7.16 [1-1] Slot—PRI Port (KX-TDA100/KX-TDA200/KX-TDA600 only)—Extension Setting

PT Programming Manual

None

Feature Guide References

1.1.1.4 Multiple Subscriber Number (MSN) Ringing Service

1.21.1.12 ISDN Service Access by Keypad Protocol

Description

ISDN provides some supplementary services by key protocol, and they may require a service access code to be dialled.

Conditions

- This feature complies with the following European Telecommunication Standard (ETS) specification:
  – ETS 300 122 Generic keypad protocol for the support of supplementary service (ISDN Service Access).
- **ISDN Service Button**
  A flexible button can be customised as an ISDN Service button. A service access code can also be assigned on this button for a quick operation.
- This feature is not available to an SLT.

Programming Manual References

PC Programming Manual

2.10.5 [4-1-4] Wired Extension—Flexible Button
→ Type
→ Dial (for ISDN Service)

2.10.13 [4-2-3] Portable Station—Flexible Button
→ Type
→ Dial (for ISDN Service)

2.10.17 [4-3] DSS Console—Flexible Button
→ Type
→ Dial (for ISDN Service)

PT Programming Manual

None

Feature Guide References

1.20.2 Flexible Buttons

3.1 Capacity of System Resources

User Manual References

1.2.5 Accessing the ISDN Service (ISDN Service Access)

1.22 E1 Line Service Features

1.22.1 E1 Line Service

Description

The E1 line carries thirty 64 kbps-voice channels at 2.048 Mbps transmission speed as a trunk or private line. Voice is digitised by Pulse Code Modulation (PCM).

1. **Channel Type**
   [DR2 (Digital System R2)/E & M-C (Continuous E & M)/E & M-P (Pulsed E & M)]
   The E1 card supports three different channel types to provide connection at minimum expense. One of the three channel types can be assigned to each of the 30 channels of the E1 card individually according to tariffs and customer needs.

2. **E1 Features**
   The following table shows the features available for each channel type:
   [Feature Table]

Channel Type	(1)	(2)	(3)	(4)	(5)
	TIE	DID	DIL	ANI	Call Charge Information
DR2		✔	✔	✔*1	✔
E & M-C	✔	✔	✔	✔*2	
E & M-P	✔	✔	✔	✔*2	

✔: Available
*1: Receiving Dial Mode should be MFC-R2.
*2: Available when this PBX is connected to the KX-TDA30, KX-TDA100, KX-TDA200, KX-TDA600, or KX-TD500.

[Explanation]

Number in the table	Feature	Description
(1)	**TIE Line Service**	Refer to the TIE Line Service feature. (→ 1.30.1 TIE Line Service)
(2)	**Direct Inward Dialling (DID)**	Refer to the DID feature. (→ 1.1.1.3 Direct Inward Dialling (DID)/Direct Dialling In (DDI))
(3)	**Direct In Line (DIL)**	Refer to the DIL feature. (→ 1.1.1.2 Direct In Line (DIL))

Number in the table	Feature	Description
(4)	**Automatic Number Identification (ANI)**	**Outgoing ANI:** Sends the caller's number to the E1 line. The sending method is the same as ISDN CLIP service. (→ 1.21.1.2 Calling/Connected Line Identification Presentation (CLIP/COLP)) **Incoming ANI:** Receives the caller's number from the E1 line. When the ANI number is received, it can be treated the same as a Caller ID number. (→ 1.18.1 Caller ID)
(5)	**Call Charge Information**	The call charge meter pulses can be received during a conversation. (→ 1.26.3 Call Charge Services)

Conditions

- If an E1 line is used as a trunk, the channel type depends on the contract with the telephone company.
- If "**MFC-R2**" is selected as the Dial Mode, the PBX always sends a dial tone, instead of the telephone company, when making a trunk call using E1 line.

Programming Manual References

PC Programming Manual

2.7.25 [1-1] Slot—E1 Port

2.7.26 [1-1] Slot—E1 Port—Channel Command

PT Programming Manual

None

Feature Guide References

3.2 Exclusive Features Table

1.23 T1 Line Service Features

1.23.1 T1 Line Service

Description

The T1 line carries twenty-four 64 kbps-voice channels at 1.5 Mbps transmission speed as a trunk or private line. Voice is digitised by Pulse Code Modulation (PCM). This feature is only available for the KX-TDA100, KX-TDA200, and KX-TDA600.

1. Channel Type

[LCOT/GCOT/DID/TIE/OPX]
The T1 card supports five different channel types to provide connection at minimum expense. One of the five channel types can be assigned to one of the 24 channels of the T1 card individually according to tariffs and customer needs.

2. T1 Features

The following table shows the features available for each channel type:
[Feature Table]

Channel Type	(1)	(2)	(3)	(4)	(5)
	TIE	DID	DIL	OPX	ANI
LCOT			✔		
GCOT			✔		
DID		✔	✔		✔
TIE (E & M)	✔	✔	✔		✔
OPX				✔	

✔: Available

[Explanation]

Number in the Table	Feature	Description
(1)	**TIE Line Service**	Refer to the TIE Line Service feature. (→ 1.30.1 TIE Line Service)
(2)	**Direct Inward Dialling (DID)**	Refer to the DID feature. (→ 1.1.1.3 Direct Inward Dialling (DID)/Direct Dialling In (DDI))
(3)	**Direct In Line (DIL)**	Refer to the DIL feature. (→ 1.1.1.2 Direct In Line (DIL))

Number in the Table	Feature	Description
(4)	**Off Premise Extension (OPX)**	An SLT which is installed off site can perform as if it were installed locally. The SLT makes and receives a call through the PBX. An extension number can be given to the OPX, and extension data such as COS is also applied. **[Example]** 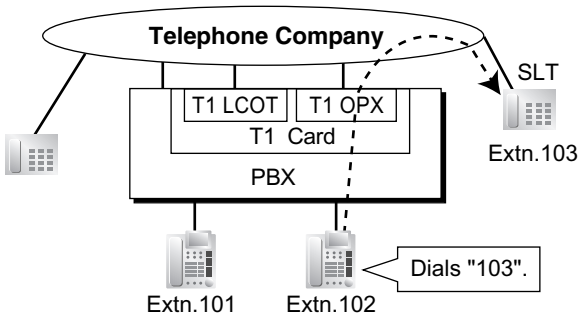
(5)	**Automatic Number Identification (ANI)**	Receives the caller's number from the T1 line. When the ANI number is received, it can be treated the same as a Caller ID number. (→ 1.18.1 Caller ID)

Conditions

- If a T1 line is used as a trunk, the channel type depends on the contract with the telephone company.

Programming Manual References

PC Programming Manual

2.7.19 [1-1] Slot—T1 Port (KX-TDA100/KX-TDA200/KX-TDA600 only)

2.7.20 [1-1] Slot—T1 Port—Channel Command (KX-TDA100/KX-TDA200/KX-TDA600 only)

PT Programming Manual

None

Feature Guide References

3.2 Exclusive Features Table

1.24 Voice Mail Features

1.24.1 Voice Mail (VM) Group

Description

A VPS can be connected to extension ports of the PBX. The extension ports make a group, called a VM group. This group has a floating extension number. The VM group can be the destination for redirected calls and incoming calls. When receiving a call, the VPS can greet the caller offering them the option to leave a message or dial a number to reach the desired party. The VPS can record the message for each extension and leave notification on the corresponding extension, if the called extension is not able to answer calls.

1. VM Group Type

Type	Description
VM (DTMF) Group	A group of SLT ports which use the Voice Mail DTMF Integration features. A maximum of 2 (for KX-TDA30/KX-TDA100/KX-TDA200) or 8 (for KX-TDA600) groups can be assigned.
VM (DPT) Group	A group of DPT ports which use the Voice Mail DPT (Digital) Integration features. With the KX-TDA30: • One VM (DPT) group can be assigned. • A maximum of 2 ports (eight channels) of the VPS can form a group. With the KX-TDA100/KX-TDA200/KX-TDA600: • A maximum of 2 (for KX-TDA100/200) or 8 (for KX-TDA600) KX-TVS/KX-TVP systems can be connected to the PBX. • A maximum of one VM (DPT) group per KX-TVS/KX-TVP can be assigned. • A maximum of 12 ports (24 channels) of the VPS can form each group.

[Example]

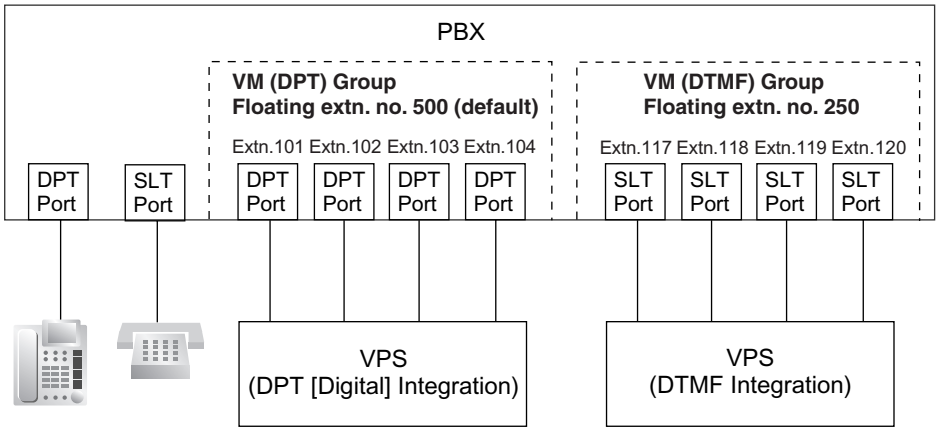

VM (DTMF) Group Assignment:
The VPS is connected to the SLT ports of the PBX. These SLT ports, as well as VM (DTMF) Group settings, must be configured to allow DTMF Integration, as shown in the following [Programming Example of Extension Port] and [Programming Example of VM (DTMF) Group].

VM (DPT) Group Assignment:
The VPS is connected to the DPT ports of the PBX. These DPT ports, as well as VM (DPT) group settings, must be configured to allow DPT (Digital) Integration, as shown in the following [Programming Example of Extension Port] and [Programming Example of VM (DPT) Group].

[Programming Example of Extension Port]

Slot	Port	Port Type	Extn. No.	DPT Property			
				Type*1	Unit No. of VPS*2	Port No. of VPS*3	
3	1	DPT	101	VM (DPT)	1	1	VM (DPT) Group 1
3	2	DPT	102	VM (DPT)	1	2	
:	:	:	:	:	:	:	
4	1	S-Hybrid	201	VM (DPT)	2	1	VM (DPT) Group 2
4	2	S-Hybrid	202	VM (DPT)	2	2	
:	:	:	:	:	:	:	
5	1	SLT	301	Not assignable	Not assignable	Not assignable	VM (DTMF) Group 1
5	2	SLT	302	Not assignable	Not assignable	Not assignable	
:	:	:	:	:	:	:	
6	1	SLT	401	Not assignable	Not assignable	Not assignable	VM (DTMF) Group 2
6	2	SLT	402	Not assignable	Not assignable	Not assignable	

*1: → 2.7.5 [1-1] Slot—Extension Port—DPT Type—Type (for DPT or S-Hybrid port)
→ [601] Terminal Device Assignment
*2: → 2.7.5 [1-1] Slot—Extension Port—DPT Type—VM Unit No. (for DPT or S-Hybrid port)
*3: → 2.7.5 [1-1] Slot—Extension Port—DPT Type—VM Port No. (for DPT or S-Hybrid port)

[Programming Example of VM (DTMF) Group]

VM (DTMF) Group No.	Floating Extension No.	Group Name	Service Mode	Extension No. of Port Connected to VPS Port		
				1	2	…
1	300	Company C	AA	301	302	…
2	400	Company D	VM	401	402	…

→ 2.9.20 [3-8-2] VM(DTMF) Group—Group Settings

[Programming Example of VM (DPT) Group]

VM (DPT) Group No.	Floating Extension No.*1	Group Name*2
1	500	Company A
2	200	Company B

*1: → 2.9.17 [3-7-2] VM(DPT) Group—Unit Settings—Floating Extension No.
→ [660] VM Group Floating Extension Number
*2: → 2.9.17 [3-7-2] VM(DPT) Group—Unit Settings—Group Name

2. Incoming Calls to VM Group
When incoming calls are received at the floating extension number of the VM group, calls will hunt starting at the lowest VM port number. In this case, the FWD and DND settings (→ 1.3.1 Call

Forwarding (FWD)/Do Not Disturb (DND)) for each extension port are disregarded.
It is programmable whether the calls queue when all extension ports in the group are busy through system programming. If the queuing is disabled through system programming, the call will be redirected to the destination, assigned on the trunk group which receives the call, by the Intercept Routing feature.

Conditions

[General]

- It is possible to call an extension (extension port) in a VM group directly. If the calls are routed directly to the extension in the group, it is possible to enable some features (e.g., FWD, Idle Extension Hunting) on the extension in the group.
  The Voice Mail DTMF/DPT (Digital) Integration (e.g., command transmit) is also available on the extension.
- **One-touch Voice Mail Feature Access**
  It is possible to assign a One-touch Dialling button for direct access to a Voice Mail feature. (→ 1.6.1.2 One-touch Dialling) For example, to access a mailbox (mailbox number 123) of the VPS (extension number 165) directly, assign "**165**#6**123**" to a One-touch Dialling button. When pressing this button, the outgoing message (OGM) of the mailbox will be heard.

[KX-TDA30]

- All ports in a VM (DPT) group must be connected to either the same DLC card, or to the pre-installed Super Hybrid ports.

[KX-TDA100/KX-TDA200/KX-TDA600]

- All ports in a VM (DPT) group must be connected to a single DHLC or DLC card.

Programming Manual References

PC Programming Manual

2.7.5 [1-1] Slot—Extension Port
→ DPT Type—Type (for DPT or S-Hybrid port)
→ DPT Type—VM Unit No. (for DPT or S-Hybrid port)
→ DPT Type—VM Port No. (for DPT or S-Hybrid port)
2.9.16 [3-7-1] VM(DPT) Group—System Settings
2.9.17 [3-7-2] VM(DPT) Group—Unit Settings
2.9.19 [3-8-1] VM(DTMF) Group—System Settings
2.9.20 [3-8-2] VM(DTMF) Group—Group Settings

PT Programming Manual

[601] Terminal Device Assignment
[660] VM Group Floating Extension Number

Feature Guide References

1.24.2 Voice Mail DTMF Integration
1.24.3 Voice Mail DPT (Digital) Integration
3.1 Capacity of System Resources

1.24.2 Voice Mail DTMF Integration

Description

The PBX and the VPS connected to the PBX can transmit commands using DTMF signals to each other. The PBX sends preprogrammed commands using DTMF to the VPS automatically to change the answering service between Voice Mail (VM) service mode and Automated Attendant (AA) service mode or to inform the extension status (e.g., busy). The VPS sends the commands to the PBX like an SLT.
The following answering services and features are available:

1. **Voice Mail (VM) Service Mode**
   When a caller reaches the VPS, the VPS greets and guides the caller to leave a voice message for a specified mailbox.
   [Example]
   The VPS sends the message to the caller, "Thank you for calling Panasonic. Please enter the mailbox number of the person you wish to leave your message for."
   ↓
   The caller dials the mailbox number. Then, the dialled number is sent to the VPS via the PBX.
   ↓
   The VPS sends the personal greeting to the caller, "You have reached Mike's voice mail. I am sorry I cannot take your call right now. Please leave a message and I will call you back."
   ↓
   The caller leaves a message.

   If the call reroutes to the floating extension number of the VM (DTMF) Group or the extension in the VM (DTMF) group by such as the FWD feature, when the VPS answers the call, the PBX will dial the mailbox number of the corresponding group or extension and any other digits required to the VPS automatically using the caller-dialled number (Follow on ID). In this case, the caller can reach a mailbox without knowing the mailbox number.
   [Available Features for Follow on ID]
   - **a)** FWD to a Mailbox
   - **b)** Intercept Routing to a Mailbox
   - **c)** Call Transfer to a Mailbox
   - **d)** Listening to a Message in a Mailbox

2. **Automated Attendant (AA) Service Mode**
   The VPS greets and guides the caller to the desired extension directly without operator assistance.

3. **VM → AA Service, AA → VM Service**
   It is possible to switch the service mode assigned on the VPS port, from the VM service to AA service or vice versa.

System Explanation

1. **Service Mode Assignment**
   Assign the service mode, VM service or AA service, to the VM (DTMF) group to correspond with the assignment of the VPS.
   → 2.9.20 [3-8-2] VM(DTMF) Group—Group Settings—Type

2. DTMF Command Assignment

Assign the DTMF command to suit the VPS settings.

2.9.19 [3-8-1] VM(DTMF) Group—System Settings
→ VM DTMF Command—Recording Message
→ VM DTMF Command—Listening Message
→ VM DTMF Command—Switching to AA
→ VM DTMF Command—Switching to VM

	Command (Default)
Switching to VM	#6
Switching to AA	#8
Recording message	H
Listening message	✳H

Note

H = Mailbox Number

3. VM Service

a) FWD to a Mailbox of the VPS

The PBX sends a mailbox number of the corresponding extension to the VPS when a call is forwarded from an extension to the VPS. Therefore the caller can leave a message for the called extension without knowing the mailbox number.

[FWD to the VPS Sequence Selection]

If an extension user sets FWD to the VPS, any incoming call will be forwarded to the VPS. It is also possible to send the AA command, even in the VM service mode, when calls are forwarded so that the caller can be directed to an extension rather than a mailbox. This can be performed by selecting "**AA**" through system programming.

→ 2.9.19 [3-8-1] VM(DTMF) Group—System Settings—Others—FWD to the VPS Sequence

Parameter	Transmitted Command	
	In AA Service Mode	**In VM Service Mode**
Answer by Mailbox (Default)	Switching to VM command + Recording message command (#6 + H [H = Mailbox No.])	Recording message command (H [H = Mailbox No.])
AA	Switching to AA command (#8)	Switching to AA command (#8)
None	(DTMF commands are not sent. Work with default of the VPS.)	

b) Intercept Routing to a Mailbox of the VPS

The PBX sends a mailbox number of the corresponding extension to the VPS when a trunk call is intercepted from an extension to the VPS. Therefore the caller can leave a message for the called extension without knowing the mailbox number.

[Intercept Routing to the VPS Sequence Selection]

If an extension user sets Intercept Routing to the VPS, the intercepted trunk calls will be redirected to the VPS.
It is also possible to send the AA command, even in the VM service mode, when calls are intercepted so that the caller can be directed to an extension rather than a mailbox. This can be performed by selecting "**AA**" through system programming.

→ 2.9.19 [3-8-1] VM(DTMF) Group—System Settings—Others—Intercept Routing to the VPS Sequence

Parameter	Transmitted Command	
	In AA Service Mode	In VM Service Mode
Answer by Mailbox	Switching to VM command + Recording message command (#6 + H [H = Mailbox No.])	Recording message command (H [H = Mailbox No.])
AA	Switching to AA command (#8)	Switching to AA command (#8)
None (Default)	(DTMF commands are not sent. Work with default of the VPS.)	

[Example of a) & b)]

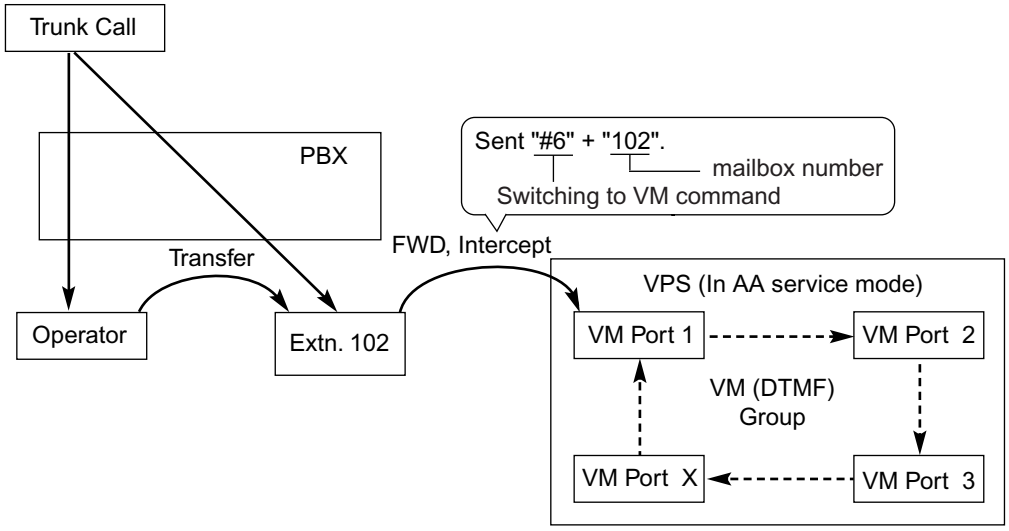

c) Transferring to a Mailbox of the VPS

An extension user can transfer a call to a mailbox of the VPS so that the caller can leave a message in the mailbox of the desired extension. (→ 1.12.1 Call Transfer) The extension user should use the Voice Mail (VM) Transfer button, when transferring a call to the mailbox of the VPS. When the extension user presses this button and enters the desired extension number, the PBX will transfer the call to the VM group and dial the mailbox number of the desired extension with the required command (after the VPS answers the call). Therefore the caller can leave a message without knowing the mailbox number.

2.10.5 [4-1-4] Wired Extension—Flexible Button
→ Type
→ Ext No. / Floating Ext. No. (for Voice Mail Transfer)

2.10.10 [4-2-1] Portable Station—Extension Settings
→ Type
→ Ext No. / Floating Ext. No. (for Voice Mail Transfer)

2.10.17 [4-3] DSS Console—Flexible Button
→ Type
→ Ext. No. / Floating Ext No. (for Voice Mail Transfer)

[Performance of Pressing the VM Transfer Button and Entering an Extension Number]

Transmitted Command	
In AA Service Mode	**In VM Service Mode**
Switching to VM command + Recording message command (#6 + H [H = Mailbox No.])	Recording message command (H [H = Mailbox No.])

[Example]

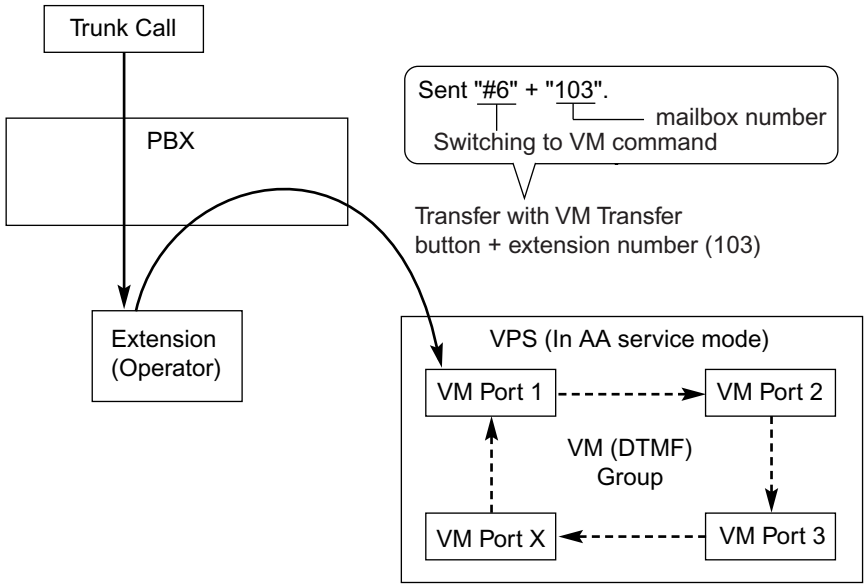

d) Listening to a Recorded Message

If the VPS receives a message, the VPS will set the Message Waiting feature on the corresponding telephone to notify the extension user that there is a message waiting in his mailbox. The Message button light of the extension will turn on (→ 1.19.1 Message Waiting), thereby notifying the extension user that there is a message waiting in his mailbox. When the Message button light turns on, pressing the button allows the extension user to play back the messages stored in his mailbox without dialling such as a mailbox number. It is programmable whether the PBX or the VPS cancels the Message Waiting feature (e.g., turning off the Message button light).
→ 2.9.19 [3-8-1] VM(DTMF) Group—System Settings—Others—Message Waiting Lamp Control

When the PBX is selected, the Message Waiting feature is cancelled after the extension user has accessed the VPS. When the VPS is selected, the Message Waiting feature is cancelled after the extension user has listened to messages stored in his mailbox.

[Performance of Pressing the MESSAGE Button]

Transmitted Command	
In AA Service Mode	**In VM Service Mode**
Switching to VM command + Listening message command (#6 + ✳H [H = Mailbox No.])	Listening message command (✳H [H = Mailbox No.])

[Example]

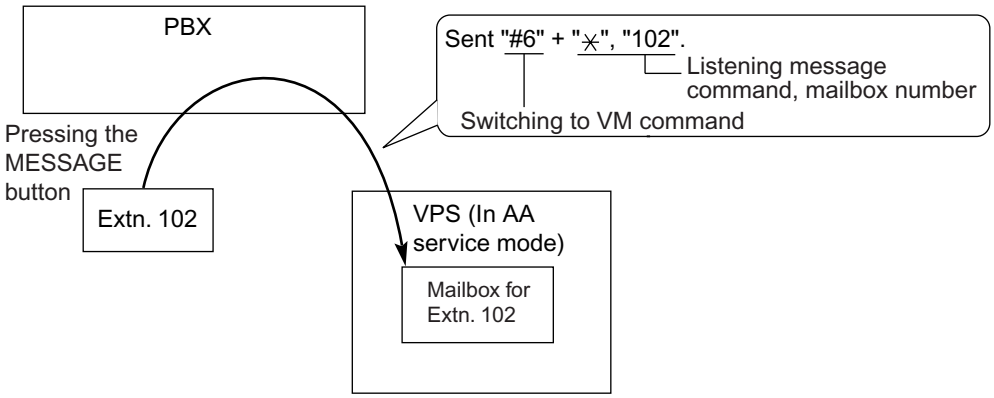

4. AA Service

If the VPS transfers the call using the AA service, the PBX will inform the VPS of the status of the called destination with the preprogrammed DTMF status signal so that the VPS can confirm the status of the extension without listening to the system tones (e.g., ringback tone).
Assign the DTMF status signal to suit the VPS settings.

[DTMF Status Signals and Conditions]

Status	Condition	Default Command
RBT (ringback tone)	The PBX is ringing the corresponding extension.	1
BT (busy tone)	The called extension is busy.	2
ROT (reorder tone)	The dialled number is invalid.	3
DND (DND tone)	The called extension has set DND. (→ 1.3.1.3 Do Not Disturb (DND))	4
Answer	The called extension has answered the call.	5
FWD VM RBT (FWD to Voice Mail ringback tone)	The called extension has set FWD to VPS and the PBX is calling another port of the VPS.	6
FWD VM BT (FWD to Voice Mail busy tone)	The called extension has set FWD to VPS and all ports of the VPS are busy.	7
FWD EXT RBT (FWD to extension ringback tone)	The PBX is calling an extension other than the one dialled. FWD or Idle Extension Hunting (→ 1.2.1 Idle Extension Hunting) may be assigned by the called extension.	8
Confirm (confirmation tone)	The PBX receives confirmation that the feature has been successfully set or cancelled (e.g., Message Waiting) on the extension.	9
Disconnect	The caller has hung up.	#9

2.9.19 [3-8-1] VM(DTMF) Group—System Settings
→ VM DTMF Status Signal—Ringback Tone
→ VM DTMF Status Signal—Busy Tone
→ VM DTMF Status Signal—Reorder Tone

→ VM DTMF Status Signal—DND tone
→ VM DTMF Status Signal—Answer
→ VM DTMF Status Signal—Confirm
→ VM DTMF Status Signal—Disconnect
→ VM DTMF Status Signal—FWD to VM Ringback Tone
→ VM DTMF Status Signal—FWD to VM Busy Tone
→ VM DTMF Status Signal—FWD to Extension Ringback Tone

[Example]

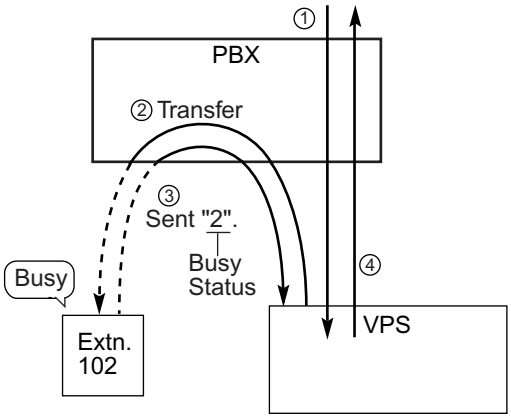

① An incoming call reaches the VPS. The VPS greets the caller: "Thank you for calling Panasonic. If you know the extension number of the person you wish… ".

② The caller dials the extension number (extn. 102). The VPS will transfer the call to the extension via the PBX.

③ If the extension is not available, the PBX sends DTMF status signal of the extension (busy status) to the VPS.

④ The VPS receives the DTMF status signal and send the appropriate message to the caller: "Sorry. The extension is busy. Would you like to leave a message… ".

Conditions

- **Voice Mail (VM) Transfer Button**
  A flexible button can be customised as the Voice Mail (VM) Transfer button with the floating extension number of the VM group as the parameter.
- It is possible to assign the time period between when the VPS answers the call and the PBX sends the Follow on ID to the VPS.
  → 2.9.19 [3-8-1] VM(DTMF) Group—System Settings—Timing—Waiting Time before Sending Follow on ID
- It is possible to assign the time period between when the VPS transfers the call using the AA service to the PBX and the PBX sends the DTMF status signal to the VPS.
  → 2.9.19 [3-8-1] VM(DTMF) Group—System Settings—Timing—DTMF Length for VM
- It is possible to select whether the mailbox number is the same as the extension number, or the mailbox number is programmable for each extension number and incoming call distribution group (Mailbox Access ID).
  → 2.9.10 [3-5-1] Incoming Call Distribution Group—Group Settings—Miscellaneous—Programmed Mailbox No.
  → 2.10.1 [4-1-1] Wired Extension—Extension Settings—Option 1—Programmed Mailbox No.
  → 2.10.10 [4-2-1] Portable Station—Extension Settings—Option 1—Programmed Mailbox No.
- The Inter-digit time for the DTMF command and for DTMF status signal is programmable.
  2.9.19 [3-8-1] VM(DTMF) Group—System Settings
  → Timing—Inter-digit Time
  → Timing—Waiting Time before Sending VM DTMF Status Signal
- Data Line Security is set automatically on the extensions in the VM (DTMF) group to achieve proper recording. (→ 1.11.5 Data Line Security)

Programming Manual References

PC Programming Manual

2.8.4 [2-3] Timers & Counters—Miscellaneous—Voice Mail (Caller from VM to CO)—On-hook Wait Time

2.9.10 [3-5-1] Incoming Call Distribution Group—Group Settings—Miscellaneous—Programmed Mailbox No.

2.9.19 [3-8-1] VM(DTMF) Group—System Settings

2.9.20 [3-8-2] VM(DTMF) Group—Group Settings

2.10.1 [4-1-1] Wired Extension—Extension Settings—Option 1—Programmed Mailbox No.

2.10.5 [4-1-4] Wired Extension—Flexible Button

→ Type

→ Ext No. / Floating Ext. No. (for Voice Mail Transfer)

2.10.10 [4-2-1] Portable Station—Extension Settings—Option 1—Programmed Mailbox No.

2.10.13 [4-2-3] Portable Station—Flexible Button

→ Type

→ Ext No. / Floating Ext. No. (for Voice Mail Transfer)

2.10.17 [4-3] DSS Console—Flexible Button

→ Type

→ Ext. No. / Floating Ext No. (for Voice Mail Transfer)

PT Programming Manual

None

Feature Guide References

1.1.1.6 Intercept Routing

1.3.1.2 Call Forwarding (FWD)

1.12.1 Call Transfer

1.20.2 Flexible Buttons

1.24.1 Voice Mail (VM) Group

User Manual References

1.10.5 If a Voice Processing System is Connected

1.24.3 Voice Mail DPT (Digital) Integration

Description

A Panasonic VPS that supports DPT (Digital) Integration (e.g., the KX-TVP200) can be connected to this PBX in a tightly integrated fashion.
DPT (Digital) Integration features can be used when the VPS is connected through DPT ports of the PBX.

Feature Explanation

1. **Automatic Configuration—Quick Setup**

   The PBX informs the VPS of its extension numbers and the floating extension numbers of the incoming call distribution groups so that the VPS can create mailboxes with this data automatically.

2. **FWD to a Mailbox of the VPS**

   If an extension user sets FWD to the VPS, incoming calls are forwarded to the VPS. (→ 1.3.1.2 Call Forwarding (FWD)) The PBX sends a mailbox number of the forwarding extension to the VPS. Therefore the caller can leave a message in the mailbox of the extension without knowing the mailbox number.

3. **Intercept Routing to a Mailbox of the VPS**

   If an extension user sets Intercept Routing to the VPS, the intercepted trunk calls will be redirected to the VPS. (→ 1.1.1.6 Intercept Routing) If the "**Intercept to Mailbox**" setting is enabled through system programming, the PBX sends the mailbox number of the intercepted extension to the VPS. Therefore the caller can leave a message in the mailbox of the extension without knowing the mailbox number.
   → 2.9.16 [3-7-1] VM(DPT) Group—System Settings—Intercept to Mailbox

4. **Transferring to a Mailbox of the VPS**

   An extension user can transfer a call to a mailbox of the VPS so that the caller can leave a message in the mailbox of the desired extension. (→ 1.12.1 Call Transfer) The extension user should use the Voice Mail (VM) Transfer button, when transferring a call to the mailbox of the VPS. When the extension user presses this button and enters the desired extension number, the PBX will transfer the call to the VM group and dial the mailbox number of the desired extension number with the required command (after the VPS answers the call). Therefore the caller can leave a message without knowing the mailbox number.

5. **Transfer Recall to a Mailbox of the VPS**

   If a call is transferred to an extension via the Automated Attendant (AA) service of the VPS and the call is not answered within a preprogrammed Transfer Recall time, the PBX sends the mailbox number of the transfer destination extension to the VPS. Therefore the caller can leave a message in the mailbox of the extension without knowing the mailbox number. The "**Transfer Recall to Mailbox**" setting should be enabled through system programming to use this feature.
   → 2.8.4 [2-3] Timers & Counters—Dial / IRNA / Recall / Tone—Recall—Transfer Recall
   → 2.9.16 [3-7-1] VM(DPT) Group—System Settings—Transfer Recall to Mailbox
   → [201] Transfer Recall Time

6. **Listening to a Recorded Message (Direct Mailbox Access)**

   If the VPS receives a message, the VPS will set the Message Waiting feature (e.g., turning on the Message button light, and showing the number of messages waiting on the display of a 6-line display PT) on the corresponding telephone as notification. (→ 1.19.1 Message Waiting) Thereby, the VPS notifies the extension user that there is a message waiting in his mailbox. When the Message button light turns on, pressing the button allows the extension user to play back the messages stored in his mailbox without dialling such as a mailbox.
   When the extension user dials an extension number of the VM (DPT) extension port or the floating extension number of the VM (DPT) group from his extension, he can listen to the messages stored in

his mailbox without dialling his mailbox number (Direct Mailbox Access). It is possible to disable this feature by COS programming on the VPS.

7. VPS Trunk Service & Automatic Time Mode Notification for Incoming Call*

Multiple tenants can share a single VPS; each tenant does not require a dedicated VPS port. If the destination of the incoming trunk call is a VM (DPT) group, the PBX sends the VPS trunk group number and time mode (day/lunch/break/night) of the tenant (→ 2.2.4 Time Service) assigned for the call to the VPS. Therefore the VPS can send the assigned message (company greeting) to the caller. Corresponding VPS trunk group number and tenant number are determined by the setting of the incoming trunk call as follows:

a) **DIL/TIE:** the setting of each trunk port (→ 1.1.1.2 Direct In Line (DIL), 1.30.1 TIE Line Service)
2.16.2 [10-2] DIL Table & Port Settings—DIL
→ Tenant Number
→ VM Trunk Group

b) **DID/DDI:** the setting of each location number for DID/DDI (→ 1.1.1.3 Direct Inward Dialling (DID)/Direct Dialling In (DDI))
2.16.3 [10-3] DDI / DID Table
→ Tenant Number
→ VM Trunk Group No.

c) **MSN:** the setting of each MSN (→ 1.1.1.4 Multiple Subscriber Number (MSN) Ringing Service)
2.16.6 [10-4] MSN Table—Main
→ Tenant Number
→ VM Trunk Group No.

[Example]
For DID Calls:
Each location number can have its VPS trunk group number (message number) and tenant number.

[DID Programming Example]

Location No.	DID No.	DID Destination				DID Name	VPS Trunk Group No.	Tenant No.
		Day	Lunch	Break	Night			
0001	123-4567	105	100	105	100	John White	1	1
0002	123-2468	102	100	102	100	Tom Smith	2	3
:	:	:	:	:	:	:	:	:

[VPS Programming—Programming Example of Trunk Group Assignment]

Trunk Group No.		Company Greeting No.	Incoming Call Service	. .
1	Day	1	Custom Service 11	. .
	Lunch	2	Custom Service 29	. .
	Break	3	Custom Service 31	. .
	Night	4	Custom Service 12	. .
2	Day	5	Custom Service 21	. .
	Lunch	6	Custom Service 15	. .
	Break	7	Custom Service 42	. .
	Night	8	Custom Service 30	. .
:	:	:	:	. .

Explanation:
A DID call reaches a VM (DPT) group directly or by the Intercept Routing feature. According to the [DID Programming Example] and [VPS Programming—Programming Example of Trunk Group Assignment], a caller will hear a corresponding company greeting of the VPS.
Time mode (day/lunch/break/night) of the preprogrammed tenant is applied to the DID destination and company greeting number.

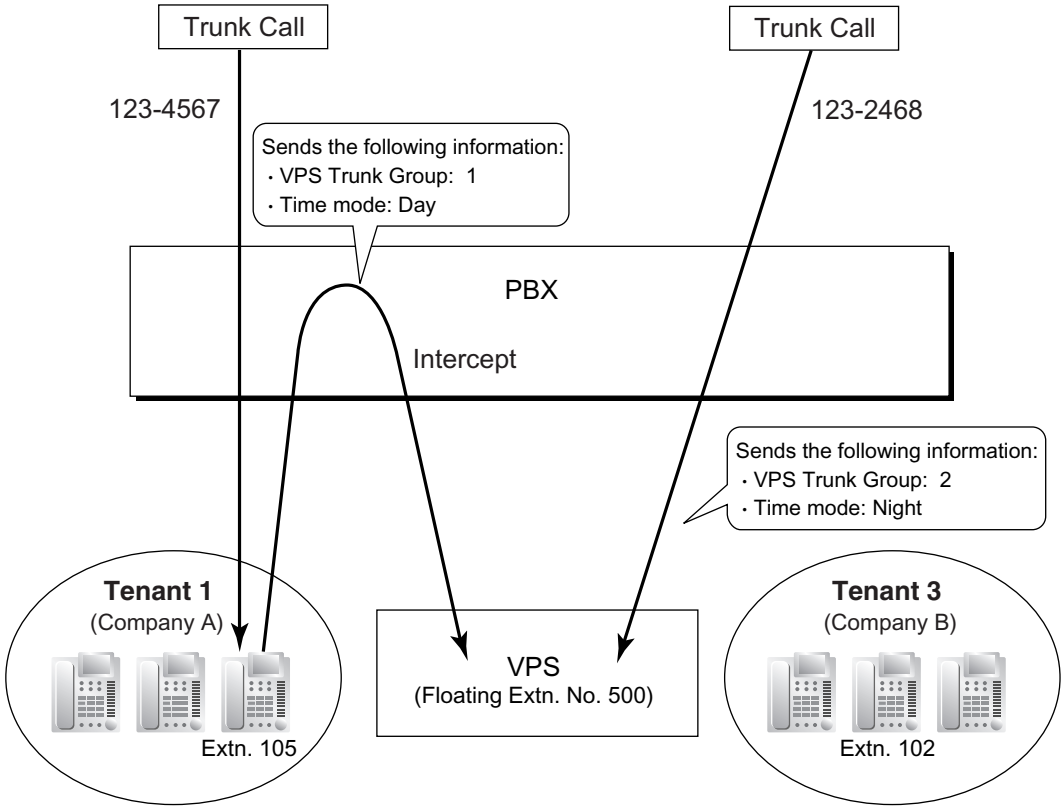

8. Caller's Identification Notification to the VPS

When receiving a trunk call, the PBX sends the caller's identification number/name to the VPS.

9. DID Number Notification to the VPS

When receiving a trunk call with a DDI/DID number or an MSN, the PBX sends the DDI/DID number or MSN to the VPS. The number will be sent to the VPS even if the call reaches the VPS after redirection by, for example, the Intercept Routing feature.

10. Status Notification to the VPS

After the call is redirected by the VPS, the PBX sends the status of the redirected extension (e.g., busy) to the VPS.

11. Paging by the VPS

The VPS can perform the Paging feature using the recorded message. (→ 1.15.1 Paging)

12. Live Call Screening (LCS)

A PT or PS user can monitor his own mailbox while a caller is leaving a message and, if desired, answer the call by pressing the LCS button. When the caller is leaving a message in the mailbox, monitoring can be carried out in two ways: each PT user can choose which through personal programming (Live Call Screening Mode Set). PS users cannot choose the way: only Private mode is available for them.
Hands-free mode: The user can monitor the call automatically through the built-in speaker.
Private mode: The user will hear a warning tone. To monitor the call, the user goes off-hook with the handset, MONITOR button, or SP-PHONE button. However, PS users cannot monitor the call with the speakerphone.
→ 2.10.1 [4-1-1] Wired Extension—Extension Settings—Option 4—LCS Answer Mode

13. Two-way Recording into the VPS

A PT user can record a conversation into his own mailbox or another mailbox, while talking on the phone.

The Two-way Record button is used to record into one's own mailbox. The Two-way Transfer button is used to record into someone else's mailbox.

Note

Before recording a Two-way telephone conversation, you should inform the other party that the conversation will be recorded.

14. **VPS Data Control by the PBX***

    The date and time settings of the VPS are controlled by the PBX.

15. **Remote FWD Setting by the VM***

    Extension FWD settings can be programmed using the VPS.

*: This feature may not be supported depending on the software version of the VPS.

Conditions

[General]

- **Voice Mail (VM) Transfer Button**
  A flexible button can be customised as the Voice Mail (VM) Transfer button with the floating extension number of the VM group as the parameter.
  Note that when a user transfers a call to the VPS with the VM Transfer button, any caller ID information associated with the original call is not passed to the VPS.
- Extensions that will have a mailbox using a VM in DPT integration must have extension numbers of 2 to 4 digits.

[Live Call Screening (LCS)]

- If an SLT is connected in parallel to a PT, and if LCS is activated for the PT in Private mode, both the PT and SLT can be used to monitor calls while in idle status. The SLT will ring to indicate a message is being recorded. The call can be monitored with the SLT by going off-hook. To intercept the call, press Flash/Recall button or flash the hookswitch. (→ 1.11.9 Parallelled Telephone)
- **LCS Button**
  A flexible button can be customised as the LCS button.
- **Extension Personal Identification Number (PIN)**
  To prevent unauthorised monitoring, it is recommended the LCS user assign an extension PIN. This PIN will be required when setting LCS. (→ 1.28.1 Extension Personal Identification Number (PIN)) If the user forgets the PIN, it can be cleared by an extension assigned as the manager.
- Each extension can be programmed to either end recording or continue recording the conversation after the call is intercepted, through personal programming (LCS Mode Set [After Answering]).
  → 2.10.1 [4-1-1] Wired Extension—Extension Settings—Option 4—LCS Recording Mode
  → 2.10.10 [4-2-1] Portable Station—Extension Settings—Option 4—LCS Recording Mode
- To use the LCS feature on a PS in Wireless XDP Parallel Mode, LCS can only be turned on or off from the wired telephone. In Wireless XDP Parallel Mode, setting LCS on/off from the PS has no effect. (→ 1.25.5 Wireless XDP Parallel Mode)

[Two-way Recording into the VPS]

- **Two-way Record/Two-way Transfer Button**
  A flexible button can be customised as the Two-way Record or the Two-way Transfer button. An extension number can be assigned to the Two-way Transfer button so that it can be used as a one-touch record button for the mailbox of the specified extension. (**One-touch Two-way Transfer Button**).
- When all of the VPS ports are busy:

a) Pressing the Two-way Record button sends a warning tone

b) Pressing the Two-way Transfer button followed by an extension number sends a warning tone.

[Transferring to a Mailbox of the VPS]

- When transferring a trunk call to a mailbox of the VPS, users should use the VM Transfer button. If using a standard Transfer button, users must dial "#6" after accessing the VPS, and confirm that the desired mailbox has been reached, before going on hook to complete the transfer.

Programming Manual References

PC Programming Manual

2.8.4 [2-3] Timers & Counters—Dial / IRNA / Recall / Tone—Recall—Transfer Recall

2.9.16 [3-7-1] VM(DPT) Group—System Settings

2.9.17 [3-7-2] VM(DPT) Group—Unit Settings

2.10.1 [4-1-1] Wired Extension—Extension Settings—Option 4

→ LCS Recording Mode

→ LCS Answer Mode

2.10.5 [4-1-4] Wired Extension—Flexible Button

→ Type

→ Ext No. / Floating Ext. No. (for Two-way Record)

→ Ext No. / Floating Ext. No. (for Two-way Transfer)

→ Ext No. / Floating Ext. No. (for Voice Mail Transfer)

→ Extension No. of Mailbox (for Two-way Transfer)

2.10.10 [4-2-1] Portable Station—Extension Settings—Option 4—LCS Recording Mode

2.10.13 [4-2-3] Portable Station—Flexible Button

→ Type

→ Ext No. / Floating Ext. No. (for Two-way Record)

→ Ext No. / Floating Ext. No. (for Two-way Transfer)

→ Ext No. / Floating Ext. No. (for Voice Mail Transfer)

→ Ext. No. of Mailbox (for Two-way Transfer)

2.10.17 [4-3] DSS Console—Flexible Button

→ Type

→ Ext. No. / Floating Ext No. (for Two-way Record)

→ Ext. No. / Floating Ext No. (for Two-way Transfer)

→ Ext. No. / Floating Ext No. (for Voice Mail Transfer)

→ Ext. No. of Mailbox (for Two-way Transfer)

2.11.1 [5-1] Doorphone—VM Trunk Group Number

2.16.2 [10-2] DIL Table & Port Settings—DIL

→ Tenant Number

→ VM Trunk Group

2.16.3 [10-3] DDI / DID Table

→ Tenant Number

→ VM Trunk Group No.

2.16.6 [10-4] MSN Table—Main

→ Tenant Number

→ VM Trunk Group No.

PT Programming Manual

[201] Transfer Recall Time

Feature Guide References

1.20.2 Flexible Buttons

1.24.1 Voice Mail (VM) Group

2.3.6 Flexible Numbering/Fixed Numbering

User Manual References

1.10.5 If a Voice Processing System is Connected

3.1.2 Settings on the Programming Mode

3.2.2 Manager Programming

1.25 Portable Station (PS) Features

1.25.1 Portable Station (PS) Connection

Description

This PBX supports the connection of a PS (e.g., KX-TCA255, KX-TD7690). It is possible to use the PBX features using the PS like a PT.

Conditions

[General]

- The PS registration is required through the system programming. To avoid unexpected registration to another PBX, the Personal Identification Number (PIN) for the PBX is necessary to register a PS. The registration can be cancelled.
- **Handover**
  Even if a PS user moves during a conversation, the PS will automatically switch between cells without disconnecting the call (**Handover**).
  Handover is available in any of the following cases:
  a) During a conversation with an extension or outside party.
  b) While a call is ringing at the PS.
  c) While the PS is in idle status.

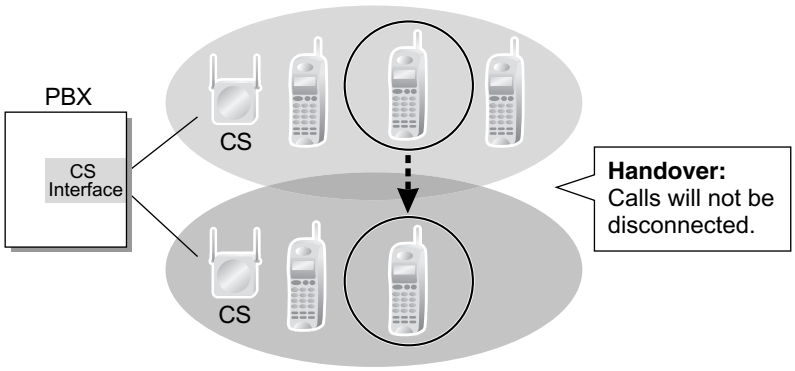

  However, Handover is not available in any of the following cases:
  a) When the new (Handover) CS is busy.
  b) When there is no CS within range.
  c) While the Live Call Screening (LCS) or Two-way Record is activated (→ 1.24.3 Voice Mail DPT (Digital) Integration).
  d) While the PS user is paging other extensions (→ 1.15.1 Paging).
  e) During a doorphone call (→ 1.17.1 Doorphone Call).
  f) While the PS user is dialling digits to make a trunk call.
  g) During a conversation with an extension using PC Console or PC Phone, to which the conversation is being recorded.
  h) While participating as a member of a broadcasting call (→ 1.16.1 Broadcasting).
- When a caller has dialled the extension number of a PS but the CS is busy, the caller hears a busy tone.

[KX-TDA600]

- A PS can only be assigned an extension number of 4 digits or less.
- When an EMEC card is installed, the total number of PSs that the PBX supports will increase.

Installation Manual References

KX-TDA30

2.7 Connection of DECT Portable Stations

2.8 Connection of 2.4 GHz Portable Stations

KX-TDA100/KX-TDA200

2.8 Connection of DECT Portable Stations

2.9 Connection of 2.4 GHz Portable Stations

KX-TDA600

2.10 Connection of DECT Portable Stations

2.11 Connection of 2.4 GHz Portable Stations

2.3.2 EMEC Card (KX-TDA6105)

Programming Manual References

PC Programming Manual

2.7.45 [1-2] Portable Station

PT Programming Manual

[690] PS Registration

[691] PS Termination

[692] Personal Identification Number (PIN) for PS Registration

Feature Guide References

2.3.6 Flexible Numbering/Fixed Numbering

1.25.2 PS Ring Group

Description

A PS ring group is a group of PS extensions that receives incoming calls. Each group has a floating extension number and name. One PS can belong to multiple groups.

[Programming Example]

	PS Ring Group 01	PS Ring Group 02	PS Ring Group 03	. .
Floating Extn. No.	301	302	303	. .
Group Name	Sales 1	Sales 2	Sales 3	. .
Incoming Trunk Call Information Display	Called Party's Name/ Number	Caller's Name/Number	Caller's Name/Number	. .
PS01	✔			. .
PS02	✔			. .
PS03	✔			. .
PS04	✔	✔		. .
PS05		✔		. .
PS06		✔		. .
PS07			✔	. .
:	:	:	:	:

✔: Constituent

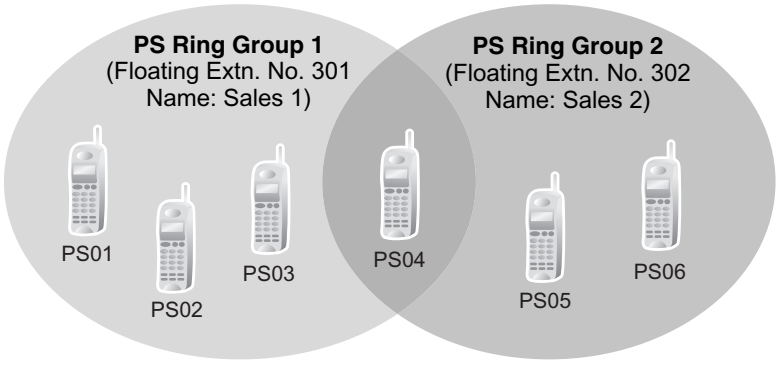

Conditions

- **PS Ring Group**
  A maximum of 32 groups can be created.

- **Available PS**
  The KX-TD7580, KX-TCA155, KX-TCA255, KX-TD7680, and KX-TD7690 can join PS ring groups.
- Incoming trunk call information is shown on a PS display when a trunk call arrives at a PS ring group which the PS joins. The display information can be selected on a PS ring group basis through system programming: Called Party's Name/Number or Caller's Name/Number.
- **Calling Multiple PSs Simultaneously**
  There are two methods to call multiple PSs simultaneously using the floating extension number assigned to the following groups:

Method	Assignment	Merit	Demerit
Incoming Call Distribution Group	Assign all desired PSs to one incoming call distribution group, and set the group call distribution method for the group to "Ring". → 1.2.2 Incoming Call Distribution Group Features	All PS users in the group can use the Log-in/Log-out feature, Wrap-up feature, and ICD Group button for the group.	The CS may often be busy as each PS in the group uses one channel when a call arrives at the group.
PS Ring Group	Assign all desired PSs to one PS ring group.	Only one channel is used when a call arrives at the group.	PS users in the group cannot use the Log-in/Log-out and Wrap-up features.

- When a PS joins a PS ring group, the following personal settings are disregarded:

  a) When the PS ring group is called:
  - Delayed Ringing
  - Display information when the incoming calls arrive;
    The settings (e.g., display priority) are disregarded.
  - The setting which is assigned on the PS (e.g., FWD)
  - The status of the PS (e.g., busy)

  b) Log-in/log-out setting (from the PS ring group/from the incoming call distribution group which the PS ring group belongs to). (→ 1.2.2.7 Log-in/Log-out)

  Note

  Log-in/log-out setting of the PS ring group from the incoming call distribution group is also disregarded.

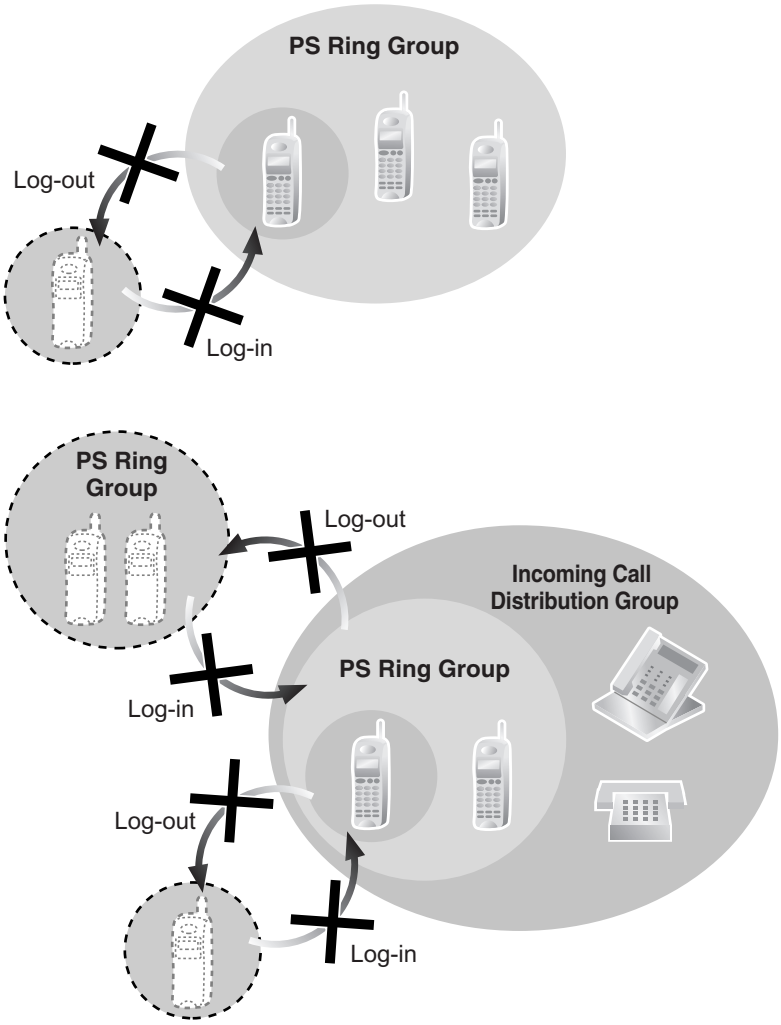

- When the PS ring group is called using the floating extension number, the group becomes busy to other callers using the floating extension number. However, the individual group members may be called directly using their extension number.
- If a PS in a PS ring group has set the DND feature for trunk calls, the PS will not ring when an intercom call or a trunk call arrives at the PS ring group. (→ 1.3.1.3 Do Not Disturb (DND))
- For calls directed to PS ring groups, the PBX will handle at most two calls simultaneously. The third call cannot arrive at a PS ring group until one of the first two calls is answered or a caller hangs up.

Programming Manual References

PC Programming Manual

2.9.10 [3-5-1] Incoming Call Distribution Group—Group Settings—Main—Distribution Method

2.9.22 [3-9] PS Ring Group

2.9.23 [3-9] PS Ring Group—Member List

PT Programming Manual

[620] Incoming Call Distribution Group Member

Feature Guide References

3.1 Capacity of System Resources

1.25.3 PS Directory

Description

A PS user can store numbers and/or names in the directory. A stored number is dialled by selecting a name or number in the directory.
Depending on the PS model, the PS user can use the following directories for easy operation:

Type	Description
PS Dialling Directory	Makes a call by selecting from a private directory of names and telephone numbers.
System Speed Dialling Directory	Makes a call by selecting from a common directory of names and numbers.
PBX Extension Dialling Directory	Makes a call by selecting from a common directory of extension names.
Shortcut Directory	Accesses a feature by selecting from a private directory of feature names and numbers.
Quick Dialling	Makes a call or accesses a feature easily by selecting from a private directory of names and numbers.

Programming Manual References

PC Programming Manual

2.12.1 [6-1] System Speed Dial

→Name

→CO Line Access Number + Telephone Number

2.10.1 [4-1-1] Wired Extension—Extension Settings—Main—Extension Name

2.10.10 [4-2-1] Portable Station—Extension Settings—Main—Extension Name

PT Programming Manual

[001] System Speed Dialling Number

[002] System Speed Dialling Name

[004] Extension Name

1.25.4 PS Feature Buttons

Description

A PS user can use PBX feature using a combination of buttons (button + a specified number, ✳, or #) and/or display operation. The flexible buttons and the display are customised through PS programming. The button assignment is the same for PT. (→ 1.20.2 Flexible Buttons). Some special feature buttons (e.g., WAVESEARCH button) may be customised depending on the PS type.

1.25.5 Wireless XDP Parallel Mode

Description

A PS can be used in parallel with a wired telephone (PT/SLT). In this case, the wired telephone is the main telephone and the PS is the sub telephone. When Wireless XDP Parallel Mode is enabled, the two telephones share one extension number (main telephone's extension number), as with XDP Parallel mode for a DPT and an SLT.

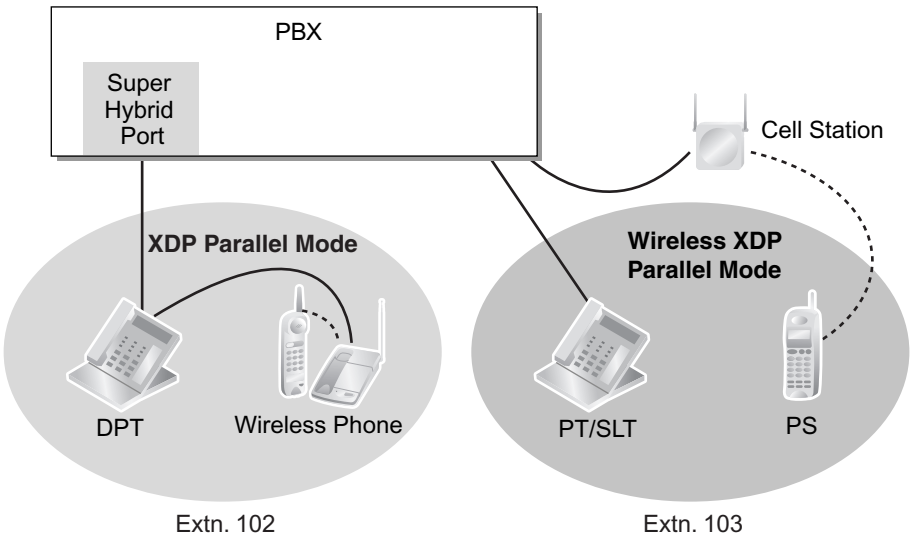

Conditions

- If one of the telephones goes off-hook while the other telephone is on a call, the call is switched to the telephone going off-hook. However, the call is not switched in one of the following conditions:
  - **a)** During a Conference call (→ 1.14.1 Conference Features).
  - **b)** While Live Call Screening (LCS) or Two-way Record is activated (→ 1.24.3 Voice Mail DPT (Digital) Integration).
  - **c)** While receiving OHCA (→ 1.8.4.3 Off-hook Call Announcement (OHCA)).
  - **d)** While being monitored by another extension (→ 1.8.3 Call Monitor).
  - **e)** During Consultation Hold.
  - **f)** During a broadcasting call (→ 1.16.1 Broadcasting).
- Wireless XDP Parallel Mode can only be set from a PS. The wired telephone can accept or deny this feature through COS programming. Once this feature is set, the setting at the wired telephone cannot be changed unless a PS changes the setting.
- The following features are not available for extensions in Wireless XDP Parallel Mode while the PS is on a call (however, they are available for extensions in Wireless XDP Parallel Mode while the wired telephone is on a call):
  - Executive Busy Override (→ 1.8.2 Executive Busy Override)
  - Whisper OHCA (→ 1.8.4.4 Whisper OHCA)
  - CCBS (→ 1.21.1.10 Completion of Calls to Busy Subscriber (CCBS))
- Most of the extension data (e.g., extension number, extension name) of the wired telephone is used for its PS as well. However, the PS has its own extension data for the following:

  - Ring Tone Pattern Table Selection (→ 1.1.3.2 Ring Tone Pattern Selection)
  - Preferred Line Assignment—Incoming (→ 1.4.1.2 Line Preference—Incoming)
  - Preferred Line Assignment—Outgoing (→ 1.5.5.2 Line Preference—Outgoing)
  - Hot Line Setting (→ 1.6.1.7 Hot Line)
  - Transfer Recall Destination for Call Transfer and Call Park (→ 1.12.1 Call Transfer) (→ 1.13.2 Call Park)
  - Display Language (→ 1.20.4 Display Information)
  - ISDN Bearer Mode (→ 1.21.1.1 Integrated Services Digital Network (ISDN)—SUMMARY)
  - Flexible Button Assignment (→ 1.20.2 Flexible Buttons)

  Note

  To change the setting of the extension data above, the setting for the wired telephone or the PS must be changed individually. When changing the PS setting, use the PS's original extension number (not the main telephone's extension number), if required.

- When the Wireless XDP Parallel Mode has been set, the following extension data for the wired telephone is copied to the PBX extension data for the PS and the extension data remains there even when the Wireless XDP Parallel Mode is cancelled.
  - Call Waiting Setting (→ 1.1.3.3 Call Waiting)
  - FWD/DND Setting (→ 1.3.1 Call Forwarding (FWD)/Do Not Disturb (DND))
  - Call Pickup Deny Setting (→ 1.4.1.3 Call Pickup)
  - Executive Busy Override Deny Setting (→ 1.8.2 Executive Busy Override)
  - Itemised Billing Code for ARS (→ 1.10.1 Automatic Route Selection (ARS))
  - Transfer Recall Destination for Call Transfer and Call Park (→ 1.12.1 Call Transfer) (→ 1.13.2 Call Park)
  - CLIP/COLP Number and CLIP/COLP Number Selection (→ 1.21.1.2 Calling/Connected Line Identification Presentation (CLIP/COLP))
  - CLIR and COLR Setting (→ 1.21.1.2 Calling/Connected Line Identification Presentation (CLIP/COLP))
  - Extension Personal Identification Number (PIN) (→ 1.28.1 Extension Personal Identification Number (PIN))
  - COS Programming (→ 2.2.1 Class of Service (COS))
  - Extension User Group (→ 2.2.2 Group)
- If Extension Feature Clear is performed, the corresponding extension data for both the wired telephone and the PS will be cleared. (→ 1.28.2 Extension Feature Clear)
- When a call arrives, both the wired telephone and the PS ring. However, in the following cases only the extension from which the option was set will receive ringing:
  - Automatic Callback Busy (→ 1.8.1 Automatic Callback Busy (Camp-on))
  - Transfer Recall (→ 1.12.1 Call Transfer), Hold Recall (→ 1.13.1 Call Hold), and Call Park Recall (→ 1.13.2 Call Park)

Programming Manual References

PC Programming Manual

2.7.5 [1-1] Slot—Extension Port—DPT Type—Type (for DPT or S-Hybrid port)

2.7.45 [1-2] Portable Station—PS Registration and De-registration

2.8.8 [2-6-1] Numbering Plan—Main—Features—Wireless XDP Parallel Mode Set / Cancel

2.8.11 [2-7-1] Class of Service—COS Settings—Extension Feature—Accept Wireless XDP Parallel Set by PS

2.10.1 [4-1-1] Wired Extension—Extension Settings—Main—Wireless XDP

PT Programming Manual

[515] Wireless XDP Parallel Mode for Paired Telephone

Feature Guide References

1.11.9 Parallelled Telephone

2.2.1 Class of Service (COS)

User Manual References

1.8.12 Using Your PS in Parallel with a Wired Telephone (Wireless XDP Parallel Mode)

1.25.6 Virtual PS

Description

An extension number can be assigned for a portable station (PS) without registering the PS unit itself. This is known as temporary registration. If a forward destination is then assigned for this PS, all calls to that extension number will be forwarded to the assigned destination. Using this setting to forward calls to outside destinations or destinations at another PBX allows those destinations to receive calls as if they were within the PBX. In addition, depending on system programming, the forward destination can use some of the features of the PBX. This can be especially useful for a cellular phone user, who can use his cellular phone as if it were his extension when he is away from his desk.

[Example]

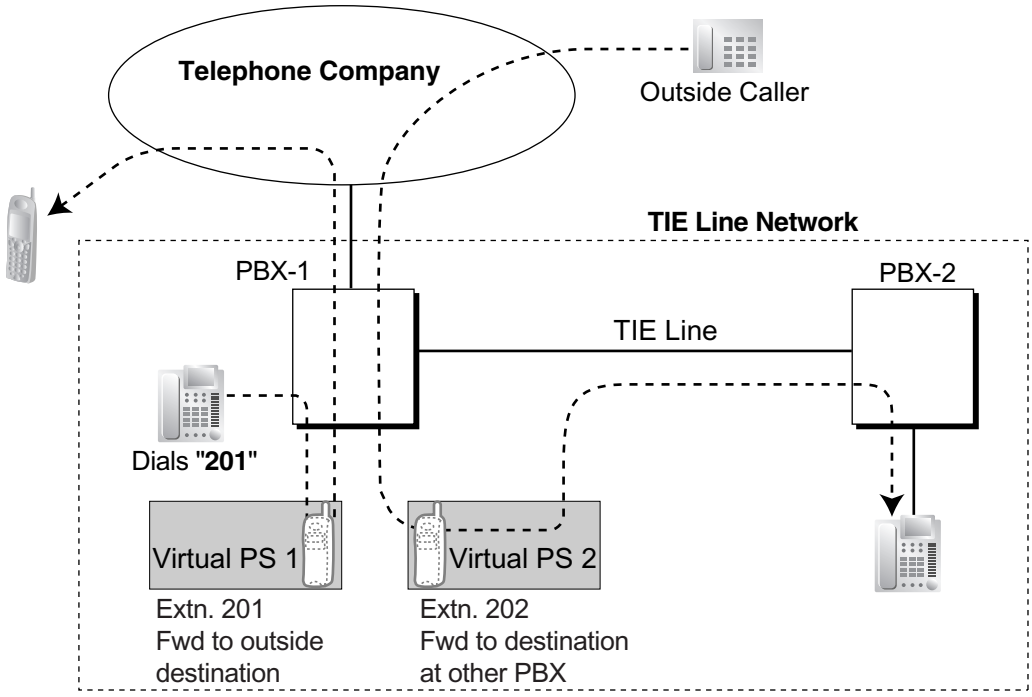

The following features can be accessed using this method:

Feature	Description & Reference
Outside Destinations in Incoming Call Distribution Group	A virtual PS allows calls to an Incoming Call Distribution (ICD) Group to be answered by outside destinations or extensions at another PBX. → 1.2.2.3 Outside Destinations in Incoming Call Distribution Group
Network ICD Group	Using virtual PSs in an ICD Group, up to 4 other PBXs can be called at the same time. → 1.30.6 Network ICD Group

Feature	Description & Reference
PS Roaming by Network ICD Group	One PS can be registered at up to 4 PBXs. Using virtual PSs in an ICD Group, all 4 PBXs can be called simultaneously to search for the PS. → 1.30.6.1 PS Roaming by Network ICD Group
Automatic Fax Transfer (KX-TDA30 only)	A virtual PS can be used to forward fax calls to a fax machine at another PBX connected by TIE line. → 1.17.7 Automatic Fax Transfer
Built-in Simplified Voice Message (KX-TDA30 only)	Registering a virtual PS as the first extension of an ICD Group provides the ICD Group with a dedicated message box that is not shared with an actual extension. → 1.17.8 Built-in Simplified Voice Message (SVM)

Conditions

- To use this feature, call forwarding to trunks must be enabled through COS programming.

Programming Manual References

PC Programming Manual

2.7.45 [1-2] Portable Station

PT Programming Manual

[690] PS Registration

Feature Guide References

1.3.1.2 Call Forwarding (FWD)

1.26 Administrative Information Features

1.26.1 Station Message Detail Recording (SMDR)

Description

Automatically records detailed information for each extension.

1. **SMDR Output Port**

   The Serial Interface (RS-232C) port can be used to output the SMDR data.
   The following devices can be connected:
   - **Serial Interface (RS-232C) port:** PC, printer, etc.

2. **SMDR Output Data**

   [General]

   The following data will be recorded and sent to the SMDR output port:
   - **a)** Trunk call information (incoming/outgoing)
   - **b)** Intercom call information (outgoing)
   - **c)** Log-in/Log-out information
   - **d)** PBX error log (→ 2.4.3 Local Alarm Information)
   - **e)** Hospitality feature information (→ 1.27.1 Hospitality Features—SUMMARY)
   - **f)** Printing Message information (→ 1.26.2 Printing Message)

   Memory for SMDR: A specified number of call records can be stored in the PBX. If more calls are originated or received, the oldest record is overwritten by the newest one.

   [KX-TDA600]

   When an EMEC card is installed, the number of SMDR records that can be stored will increase.

3. **SMDR Format Type and Contents**

   The following three types of output format can be selected through system programming:

Pattern A: 80 digits without call charge information

```
Date      Time      Ext   CO  Dial Number                    Ring  Duration  ACC Code    CD
(8 digits) (7)      (5)   (2) (25)                           (4)   (8)       (10)        (3)
-------------------------------------------------------------------------------------------
01/02/02 10:03AM  1200  01  <I>12345678901234567890    5'15  00:00'00                NA
01/02/02 10:07AM  1200  01  <I>                        0'05  00:01'05  9876543210
01/02/02 10:15AM  1200  01  1234567890123456               00:01'05  9876543210    TR
01/02/02 10:30AM  *123  01  1234567890123456               00:01'05  9876543210


01/02/02 01:07PM  1234  01  <I>ABC COMPANY12345678  0'05  00:01'05  9876543210
01/02/02 01:07PM  1234  01  <D>CDE9876<I>Q COMPANY  0'05  00:01'05  9876543210
01/02/02 01:07PM  1234  01  ABC COMPANY12345678          00:01'05
01/02/02 01:07PM  1234  01  123.....                    00:01'05
01/02/02 01:07PM  1234  01  123456XX                    00:12'05  98765

01/02/02 08:33AM  1234      In the office
01/02/02 01:07PM  1234      LOG IN
01/02/02 03:35PM  1234      LOG OUT
01/02/02 03:45PM  1234      EXT1235                     00:03'05
01/02/02 03:50PM  1234      Check in
01/02/02 03:55PM  1234      Check out
01/02/02 04:00PM  1234      Timed Reminder/Start
01/02/02 04:01PM  1234      Timed Reminder/No Answer
01/02/02 04:01PM  1234      Timed Reminder/Answer
01/02/02 04:05PM  1234      <I>S003                                                   RC
   :         :        :    :     :                      :         :         :         :
  (1)       (2)      (3)  (4)   (5)                    (6)       (7)       (8)       (9)
```

Pattern B: 80 digits with call charge information

```
Date      Time      Ext   CO  Dial Number                Duration  Cost        ACC Code    CD
(8 digits) (7)      (5)   (2) (20)                       (8)       (8+2)       (10)        (3)
-------------------------------------------------------------------------------------------
01/02/02 10:03AM  1210  01  <I>                                                         NA
01/02/02 10:07AM  2005  01  12345678901234567890  00:00'05  00560.00EU  9876543210
   :         :        :    :     :                    :         :         :         :
  (1)       (2)      (3)  (4)   (5)                  (7)       (10)      (8)       (9)
```

Pattern C: 120 digits

```
Date      Time      Ext   CO   Dial Number                                  Ring  Duration  Cost        ACC Code    CD
(8 digits) (7)      (5)   (4)  (50)                                         (4)   (8)       (8+3)       (10)        (3)
-------------------------------------------------------------------------------------------------------------------
01/02/02 10:03AM  1230  0001 12345678901234567890123456789012345678901234567890          00:00'05  00560.00EUR 9876543210 TR
01/02/02 10:07AM  1230  0001 <I>ABC COMPANY1234567890123456789012345  0'05  00:00'05                  9876543210 TR
   :         :        :    :     :                                            :         :         :         :         :
  (1)       (2)      (3)  (4)   (5)                                          (6)       (7)       (10)      (8)       (9)
```

[Explanation]

The following table explains the SMDR contents which are based on the numbers in the previous pattern examples. For the programmable items, refer to the following [Programmable Items].

Number in the Pattern	Item	Description
(1)	**Date**	Shows the date of the call.
(2)	**Time**	Shows the end time of a call as Hour/Minute/AM or PM.

Number in the Pattern	Item	Description
(3)	**Ext (Extension)**	Shows the extension number, floating extension number, etc., which was engaged in the call. Also shows the following codes: **Dxxx:** Outgoing trunk call from a doorphone (xxx=doorphone number) (→ 1.17.1 Doorphone Call) **Txxx:** Outgoing trunk call by TIE line service (xxx=trunk group number) ***xxx:** Verified call (xxx=verification code) (→ 1.9.6 Verification Code Entry)
(4)	**CO (Trunk)**	Shows the trunk number used for the call. For patterns A and B, "00" will be shown for trunk numbers over hundred.
(5)	**Dial Number**	**[Trunk Call]** **Outgoing Trunk Call** Shows the dialled telephone number. Valid digits are as follows: **0 through 9,✳ , #** **P:** Pause **F:** EFA signal **=:** A Host PBX Access code (→ 1.5.4.8 Host PBX Access Code (Access Code to the Telephone Company from a Host PBX)) **. (dot):** Secret dialling **X:** Privacy dial **–:** Transferred call If the transfer destination extension enters some digits, the entered digits will be added after "–". **Incoming Trunk Call** Shows <I> + the caller's identification name/number. It is also possible to show the DDI/DID/MSN call information. In this case, <D> + DDI/DID/MSN name/number is added before <I> .
		[Outgoing Intercom Call] Shows the dialled extension number followed by "EXT".
		[Log-in/Log-out] Shows the log-in or log-out status.
		[Check-in/Check-out] Shows the check-in or check-out status. (→ 1.27.2 Room Status Control)
		[Timed Reminder] Shows the status of a timed reminder, either "Start", "No Answer", or "Answer". (→ 1.28.4 Timed Reminder)
		[Printing Message] Shows the selected message. (→ 1.26.2 Printing Message)
		[Sensor Call] Shows calls from an external sensor as follows: <I> S + sensor number. (→ 1.17.9 External Sensor)

Number in the Pattern	Item	Description
(6)	**Ring**	Shows the ring duration before answering a call in Minutes/Seconds.
(7)	**Duration**	Shows the duration of the trunk call in Hours/Minutes/Seconds.
(8)	**Acc Code (Account Code)**	Shows the account code appended to the call. (→ 1.5.4.3 Account Code Entry)
(9)	**CD (Condition Code)**	Shows other call information with the following codes: **CL:** Collect call **TR:** Transfer **FW:** FWD to trunk **D0:** Call using DISA or TIE line service **RM:** Remote maintenance (modem) (→ 2.3.1 PC Programming) **NA:** Not answered call **RC:** Received call **AN:** Answered call **VR:** Received call with Call Waiting Caller ID (Visual Caller ID) **VA:** Answered call with Call Waiting Caller ID (Visual Caller ID)
(10)	**Cost**	Shows the call charge.

[Programmable Items]

Item	Description
Outgoing trunk call	Controls whether the outgoing trunk calls are shown. This setting is common throughout the PBX. COS programming is also required. → 2.17.1 [11-1] Main—SMDR—Print Information—Outgoing Call → [804] SMDR Outgoing Call Printing
Incoming trunk call	Controls whether the incoming trunk calls are shown. → 2.17.1 [11-1] Main—SMDR—Print Information—Incoming Call → [805] SMDR Incoming Call Printing
Outgoing intercom call	Controls whether the outgoing intercom calls are recorded. → 2.17.1 [11-1] Main—SMDR—Print Information—Intercom Call
Log-in/Log-out status	Controls whether the log-in/log-out status is recorded. → 2.17.1 [11-1] Main—SMDR—Print Information—Log-in / Log-out
ARS dial	Controls whether the user-dialled number or the modified number is shown. The Host PBX Access code ("=" followed by the access code) can be shown (as supplementary information) only when the modified number is selected in this setting. (→ 1.10.1 Automatic Route Selection (ARS)) → 2.17.1 [11-1] Main—SMDR—SMDR Options—ARS Dial

Item	Description
Caller's identification	Controls whether the caller's identification number, name, number and name, or nothing is shown. If "**none**" is selected, <I> will not be shown. → 2.17.1 [11-1] Main—SMDR—SMDR Options—Caller ID Print Format
DID/DDI number	Controls whether the DID/DDI number, name, number and name, or nothing is shown. If "**none**" is selected, <D> will not be shown. → 2.17.1 [11-1] Main—SMDR—SMDR Options—DDI/DID Print Format
Secret dialling	Controls secret dialling. If enabled, the dialled number will be shown as dots. This setting is effective only when the modified number is selected in ARS dial setting above. If the user-dialled number is selected in ARS dial setting, the dialled number will be shown as dots regardless of this setting. → 2.17.1 [11-1] Main—SMDR—SMDR Options—Secret Dial
Privacy dial	Enables or disables privacy dial. If enabled, the last four digits of the dialled telephone number and any additional digits after connection will be shown as "X". (e.g., 123-456-XXXX) → 2.17.1 [11-1] Main—SMDR—SMDR Options—Privacy Mode
Date order	The date order is changeable: month/day/year, day/month/year, year/month/day, year/day/month. → 2.17.1 [11-1] Main—SMDR—SMDR Format—Date Format
Received call	Controls whether the time of receiving an incoming trunk call is shown. → 2.17.1 [11-1] Main—SMDR—SMDR Options—Condition Code "RC" Print
Answered call	Controls whether the time of answering an incoming trunk call is shown. → 2.17.1 [11-1] Main—SMDR—SMDR Options—Condition Code "AN" Print
Room status	Controls whether room status changes are shown. → 2.17.1 [11-1] Main—SMDR—SMDR for External Hotel Application 1—Room Status Control
Timed Reminder call	Controls whether Timed Reminder calls are shown (→ 1.28.4 Timed Reminder). → 2.17.1 [11-1] Main—SMDR—SMDR for External Hotel Application 1—Timed Reminder (Wake-up Call)
Printing Message	Specifies the messages that can be selected from an extension (→ 1.26.2 Printing Message). → 2.12.9 [6-8] Hotel & Charge—Main—SMDR for External Hotel Application 2—Printing Message 1–8
Time format	Controls whether time is displayed in 12-hour or 24-hour format. → 2.17.1 [11-1] Main—SMDR—SMDR Format—Time Format (12H / 24H)

Conditions

- **SMDR Format**
  The following SMDR format can be set through system programming in order to match the paper size being used in the printer:

  a) **Page Length:** determines the number of lines per page.
  → 2.17.1 [11-1] Main—SMDR—SMDR Format—Page Length (Number of Lines)
  → [802] SMDR Page Length

  b) **Skip Perforation:** determines the number of lines to be skipped at the end of every page.
  → 2.17.1 [11-1] Main—SMDR—SMDR Format—Blank Footer Length (Number of Lines)
  → [803] SMDR Skip Perforation

  The page length should be at least four lines longer than the skip perforation length.

  Explanation:

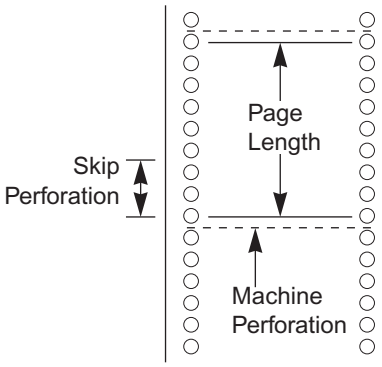

- SMDR data is not deleted even if the PBX is reset.
- If the PBX is reset during a conversation, the call will not be recorded on SMDR.
- The following calls are regarded as two separate calls for SMDR:
  – Calls before and after the flash/recall/EFA signal is manually sent during a conversation
  – Trunk-to-trunk calls by Call Transfer, FWD or DISA (recording each as "incoming call" and "outgoing call")
- The PBX waits for a preprogrammed time period between the end of dialling and start of the SMDR timer for outgoing trunk calls. When the PBX has sent out all dialled digits to the telephone company and this timer expires, the PBX starts counting the call. A display PT shows the elapsed time of the call. The starting time and the total duration of the call are recorded on SMDR.
  → 2.8.4 [2-3] Timers & Counters—Dial / IRNA / Recall / Tone—Dial—Analogue CO Call Duration Start
  → [208] Call Duration Count Starting Time for LCOT
  If the reverse signal detection has been set (→ 1.5.4.5 Reverse Circuit), the PBX will start counting the call after detecting the reverse signal from the telephone company regardless of the above timer.
- **Serial Interface (RS-232C) Parameters**
  The following communication parameters can be assigned for the Serial Interface (RS-232C) port.

  a) **New Line Code:** Select the code for the PC or printer. If the PC or printer automatically feeds lines with carriage return, select "**`CR.`**" If not, select "**`CR+LF.`**"
  → 2.17.1 [11-1] Main—RS-232C—Communication—NL Code
  → [800] RS-232C Parameter—New Line Code

  b) **Baud Rate:** A baud rate code indicates the data transmission speed from the PBX to the PC or printer.
  → 2.17.1 [11-1] Main—RS-232C—Communication—Baud Rate
  → [800] RS-232C Parameter—Baud Rate

c) **Word Length:** A word length code indicates how many bits compose a character.
→ 2.17.1 [11-1] Main—RS-232C—Communication—Word Length
→ [800] RS-232C Parameter—Word Length

d) **Parity Bit:** A parity code indicates what type of parity is used to detect an error in the string of bits composing a character. Make an appropriate selection depending on the requirements of the PC or printer.
→ 2.17.1 [11-1] Main—RS-232C—Communication—Parity Bit
→ [800] RS-232C Parameter—Parity Bit

e) **Stop Bit Length:** A stop bit code indicates the end of a bit string which composes a character. Select an appropriate value depending on the requirements of the PC or printer.
→ 2.17.1 [11-1] Main—RS-232C—Communication—Stop Bit
→ [800] RS-232C Parameter—Stop Bit Length

- If a call is transferred to an ICD group or PDN extension using Automatic Transfer, the condition code "TR" will not be recorded on SMDR (→ 1.12.1 Call Transfer).
- **Host PBX Access Code**
  The dialled number including the Host PBX Access code will be recorded on SMDR only if the modified number setting is selected in the ARS setting for SMDR.
- When a Host PBX Access code is assigned to a trunk group, calls to extensions of the host PBX are not recorded on SMDR.
- A Host PBX Access Code can be used to record only long distance calls on SMDR when a trunk port is connected directly to the telephone company (not a host PBX). This is allowed when the long distance code (e.g., “0”) is assigned as the Host PBX Access code. All local calls (e.g., calls that do not require a “0” to be dialled first) are treated as extensions of the telephone company and do not get recorded on SMDR, because in this case this PBX recognises the telephone company as the host PBX. Therefore, only long distance calls are recorded on SMDR.

Installation Manual References

KX-TDA30

2.10.1 Connection of Peripherals

KX-TDA100/KX-TDA200

2.11.1 Connection of Peripherals

KX-TDA600

2.3.2 EMEC Card (KX-TDA6105)

2.13.1 Connection of Peripherals

Programming Manual References

PC Programming Manual

2.8.4 [2-3] Timers & Counters—Dial / IRNA / Recall / Tone—Dial—Analogue CO Call Duration Start

2.8.11 [2-7-1] Class of Service—COS Settings—CO & SMDR—Outgoing CO Call Printout (SMDR)

2.12.9 [6-8] Hotel & Charge
→ Main—SMDR for External Hotel Application 2—Printing Message 1–8
→ Charge—Charge Options—Currency

2.17.1 [11-1] Main
→ SMDR
→ SMDR Options
→ RS-232C

PT Programming Manual

[800] RS-232C Parameter—New Line Code
[800] RS-232C Parameter—Baud Rate
[800] RS-232C Parameter—Word Length
[800] RS-232C Parameter—Parity Bit
[800] RS-232C Parameter—Stop Bit Length
[802] SMDR Page Length
[803] SMDR Skip Perforation
[804] SMDR Outgoing Call Printing
[805] SMDR Incoming Call Printing

Feature Guide References

1.1.1.3 Direct Inward Dialling (DID)/Direct Dialling In (DDI)
1.1.1.4 Multiple Subscriber Number (MSN) Ringing Service
1.2.2.7 Log-in/Log-out
1.5.4.8 Host PBX Access Code (Access Code to the Telephone Company from a Host PBX)
1.12.1 Call Transfer
1.17.6 Direct Inward System Access (DISA)
1.30.1 TIE Line Service
2.2.1 Class of Service (COS)
3.1 Capacity of System Resources

1.26.2 Printing Message

Description

An extension user can select a message to be output on SMDR. Up to eight messages can be preprogrammed in the Printing Message table, and are available to all extensions connected to the PBX. A message can contain the "%" symbol, which requires a number to be entered in its place when the message is selected at an extension.
Depending on the content of the preprogrammed messages, this feature can be used to record a variety of information, which can be output on SMDR to, for example, a connected PC.

[Example]
If message 1 is preprogrammed as "Started work", and message 2 as "Finished work", employees can sign in by selecting message 1 when starting work, and sign out by selecting message 2 when finishing. A connected PC can then be used to generate employee work records.

Conditions

- Up to seven "%"s can be stored for each message.

Programming Manual References

PC Programming Manual

2.8.8 [2-6-1] Numbering Plan—Main—Features—Printing Message

2.12.9 [6-8] Hotel & Charge—Main—SMDR for External Hotel Application 2—Printing Message 1–8

PT Programming Manual

None

Feature Guide References

1.26.1 Station Message Detail Recording (SMDR)

3.1 Capacity of System Resources

User Manual References

1.11.1 Using the Telephones in a Hotel-type Environment (Hospitality Features)

1.26.3 Call Charge Services

Description

The PBX receives a call charge signal during or after a conversation with an outside party. The call charge information is shown on the telephone display and SMDR.

1. Call Charge Signal Services

The type of call charge service that is used by the PBX is decided by the type of signal received from the telephone company. The type of call charge signal received from the telephone company depends on the trunk of the outgoing call. The services for each available trunk type are as follows:

Trunk	Service
Analogue trunk	Pay Tone (KX-TDA100/KX-TDA200/KX-TDA600 only)*
ISDN line	Advice of Charge (AOC) (→ 1.21.1.3 Advice of Charge (AOC))
E1 line	Meter Pulse

*: When the pay tone service is used, pay tone type (12 kHz/16 kHz) should be selected.

2. Call Charge Display

– Up to eight digits including a decimal (e.g., 12345.78)
– The decimal point position (the number of significant decimal digits) for currency is programmable.
– Up to three currency characters are programmable. (e.g., EUR or € for Euro).
– Through PC programming, you can select whether the currency characters or symbol are placed in front of or behind the call charge. (e.g., € 45.12 or 45.12 €)

3. Margin/Tax Rate Assignment

It is possible to add a margin and a tax to the call charges. The call charge rate per meter indication is programmable on a trunk group basis.
[Calculation Method]
The margin or tax rate must consist of four digits, two digits before and after the decimal (xx.xx%). The calculation method used by the PBX varies, depending on whether the telephone company sends the meter indication or the actual call charge.

a) Call charge with tax and margin in meter indication:

$$\frac{[\text{Meter indication received from the telephone company}] \times [\text{Call Charge Rate}] \times [1 + \text{Tax Rate}]}{[1 - \text{Margin Rate}]}$$

b) Call charge with tax and margin in charge:

$$\frac{[\text{Charge received from the telephone company}] \times [1 + \text{Tax Rate}]}{[1 - \text{Margin Rate}]}$$

The calculation result is rounded up to the least significant decimal digit.

4. Total Call Charge

– A PT user can show the total call charges on the display.
– The call charge is totalled on an extension, trunk, or verification code basis.
– When a verification code is used, the call is charged on the verification code and not the extension that the call was made on.

5. Budget Management

It is possible to limit telephone usage to a preprogrammed budget on each extension or verification code. For example, an extension in a rented office has a prepaid limit for telephone usage. If the amount of the call charge reaches the limit, the extension user cannot make further trunk calls. An extension assigned as the manager may increase the limit or clear the previous call charge (→ 1.9.2 Budget Management).

6. Call Charge Management

An extension assigned as a manager can perform the following:

a) Clear the call charges for each extension and verification code.

b) Clear the call charges of all extensions and verification codes.

c) View the call charges (Call Charge Reference) for each trunk, extension, or verification code.

d) Set the call charge rate for each trunk group.

e) Print out the total call charges for all extensions and verification codes.

f) Set a budget for each extension and verification code.

[Examples of Call Charge Reference]

```
*******************************************************
*   Charge Meter Print Out - Total & All CO     *
*******************************************************
Total Charge:  €00175.95

CO Line
  001:  €00194.00      002:  €00073.00      003:  €00161.00      004:  €00033.00
```

```
*******************************************************
*   Charge Meter Print Out - All Extensions     *
*******************************************************

 *775:  €00194.00      *102:  €00073.00      *776:  €00161.00

  104:  €00194.00      105:  €00073.00      106:  €00161.00      107:  €00033.00
```

Note

*: extension or verification code number

Conditions

[General]

- **Call Charge Reference by Call Charge Reference Button**
  A display telephone user can check the total call charge for his own extension using the Call Charge Reference button. A flexible button can be customised as the Call Charge Reference button.

[Pay Tone Service (KX-TDA100/KX-TDA200/KX-TDA600 only)]

- It is possible to select whether the PBX starts counting the call charge from when the PBX detects the answer signal from the telephone company.

- It is possible to enable the PBX to send the flash/recall signal to the telephone company after a conversation (in on-hook status) to receive the call charge information.

Programming Manual References

PC Programming Manual

2.7.10 [1-1] Slot—LCO Card Property
→Pay Tone—Pay Tone Frequency (KX-TDA100/KX-TDA200/KX-TDA600 only)
→Pay Tone—Sending Flash while end talk (KX-TDA100/KX-TDA200/KX-TDA600 only)
2.9.3 [3-1-3] Trunk Group—Charge Rate
2.10.5 [4-1-4] Wired Extension—Flexible Button—Type
2.10.13 [4-2-3] Portable Station—Flexible Button—Type
2.10.17 [4-3] DSS Console—Flexible Button—Type
2.12.9 [6-8] Hotel & Charge—Charge
→Margin & Tax—Margin Rate for "Telephone" (%)
→Margin & Tax—Tax Rate for "Telephone" (%)
→Charge Options—Digits After Decimal Point
→Charge Options—Currency
→Charge Options—Currency Display Position
→Charge Options—Action at Charge Limit
→Charge Options—Meter Start on Answer Detection

PT Programming Manual

[010] Charge Margin
[011] Charge Tax
[012] Charge Rate per Unit
[130] Decimal Point Position for Currency
[131] Currency
[491] Pay Tone Signal Type (KX-TDA100/KX-TDA200/KX-TDA600 only)

Feature Guide References

1.9.6 Verification Code Entry
1.20.2 Flexible Buttons
3.1 Capacity of System Resources

User Manual References

1.11.1 Using the Telephones in a Hotel-type Environment (Hospitality Features)
3.2.2 Manager Programming

1.27 Hospitality Features

1.27.1 Hospitality Features—SUMMARY

Description

This PBX has several features that support its use in a hotel-type environment, where extensions correspond to guest rooms.

Feature	Description & Reference
Room Status Control	An extension designated as the hotel operator can set the check-in status of rooms remotely. → 1.27.2 Room Status Control
Call Billing for Guest Room	Charges for calls from guest rooms can be logged and output as a guest bill. → 1.27.3 Call Billing for Guest Room
Remote Wake-up Call	An extension designated as the hotel operator can set a timed reminder for a room remotely. → 1.28.4 Timed Reminder
SMDR for External Hotel Application	Hospitality feature data, including check-in, check-out, and timed reminder times, can be output to SMDR for use in a PC-based hotel application. → 1.26.1 Station Message Detail Recording (SMDR)

1.27.2 Room Status Control

Description

A PT with a 6-line display designated as a hotel operator extension can be used to view and change the check-in and check-out status of guest rooms associated with extensions.
Any wired extension can be used as a room extension without special programming.

Flexible buttons on the hotel operator's extension can be set as Room Status Control buttons. The two types of Room Status Control buttons are as follows:

- **Check-in**
  Switches the status of selected room extensions from Check-out to Check-in.

  Telephone charges are cleared and Remote Extension Dial Lock is turned off, allowing calls to be made from the extension.

- **Check-out**
  Switches the status of selected room extensions from Check-in to Check-out.

  Room extension data, such as Timed Reminder or Last Number Redial data, is cleared, and Remote Extension Dial Lock is turned on, restricting some calls. This can be useful to prevent the room extension from being used when no guest is checked in.
  When checking a room extension out, the operator can enter customer charges such as minibar charges. A guest bill showing these charges, as well as call charges, can be printed. If necessary, the guest charge data entered can be edited later, and the bill reprinted.

Room Status Control Mode

Pressing a Room Status Control button when the PT is idle allows the hotel operator extension to enter Room Status Control mode. When in Room Status Control mode, the corresponding Room Status Control button's light flashes red. The Room Status Control button that was pressed determines which room status each room extension can be switched to. For example, if the Check-in button was pressed, the Check-in button's light flashes red and the hotel operator can select which room extensions to check-in.
In addition, DSS buttons on the hotel operator's extension or a paired DSS Console show the room status of each extension as follows:

Light Pattern	Status
Off	Check-out
Red on	Check-in

[Example Use: Check-in Mode]

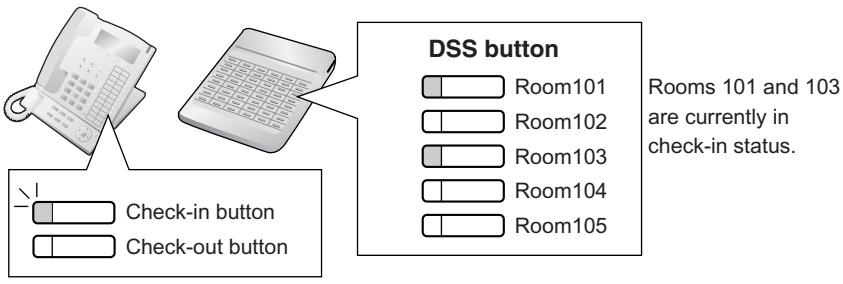

When in Room Status Control mode, the hotel operator's extension is treated as a busy extension, similar to when performing PT programming. Callers to that extension will hear a busy tone.

All other operations, including pressing other Room Status Control buttons, will be ignored. In addition, the lights of fixed and flexible buttons do not show their normal display pattern. In order to perform other operations, the hotel operator must exit Room Status Control mode.

Conditions

- An EMEC or MEC card must be installed to use guest billing functions.
- A maximum of four hotel operators can be assigned.
- Only one of each type of Room Status Control button can be assigned.
- Extensions associated with rooms must be one of the following types:
  PT (including IP-PT), SLT, ISDN Extension, T1-OPX
  PSs cannot be checked in and out as room extensions.
- It is recommended that the extension number of a room extension is the same or similar to the room number, for convenience.
- The previous guest's billing data is only cleared when an extension is set back to Check-in status. Thus, it is possible to edit guest charge data and reprint the bill at any time until another guest is checked in to the same room.
- If enabled through system programming, the check-in and check-out information is recorded on SMDR.

Installation Manual References

KX-TDA30

2.5.7 MEC Card (KX-TDA3105)

KX-TDA100/KX-TDA200

2.3.2 MEC Card (KX-TDA0105)

KX-TDA600

2.3.2 EMEC Card (KX-TDA6105)

Programming Manual References

PC Programming Manual

2.10.5 [4-1-4] Wired Extension—Flexible Button—Type

2.10.17 [4-3] DSS Console—Flexible Button—Type

2.12.9 [6-8] Hotel & Charge

→ Main—Hotel Operator—Extension 1–4

→ Bill—Checkout Billing—Billing for Guest (Need MEC Card)

PT Programming Manual

None

Feature Guide References

1.6.1.4 Last Number Redial

1.9.3 Extension Dial Lock

1.26.1 Station Message Detail Recording (SMDR)

1.28.4 Timed Reminder

User Manual References

1.11.1 Using the Telephones in a Hotel-type Environment (Hospitality Features)

1.27.3 Call Billing for Guest Room

Description

Separately from SMDR, it is possible to output a record of calls along with charges (e.g., telephone charges, minibar, etc.), which can be used in billing a guest.

Charge Items

This feature provides three types of programmable charge items (Charge Item 1, Charge Item 2, and Charge Item 3) which can be used for billing guests for various services (e.g., telephone charges). Each charge item can be customised in the following ways:

– A name that appears on the call billing print out.
2.12.9 [6-8] Hotel & Charge—Bill
→ Checkout Billing—Bill (SMDR) for "Telephone"
→ Checkout Billing—Bill (SMDR) for "Minibar"
→ Checkout Billing—Bill (SMDR) for "Others"

– A name that appears on the display telephone of the hotel operator.
2.12.9 [6-8] Hotel & Charge—Bill
→ Checkout Billing—LCD for "Telephone"
→ Checkout Billing—LCD for "Minibar"
→ Checkout Billing—LCD for "Others"

– A tax rate.
2.12.9 [6-8] Hotel & Charge—Charge
→ Margin & Tax—Tax Rate for "Telephone" (%)
→ Margin & Tax—Tax Rate for "Minibar" (%)
→ Margin & Tax—Tax Rate for "Others" (%)

Charge Item 1 can also be assigned a margin rate, which is useful for charging guests an additional rate for using the telephone services.
→ 2.12.9 [6-8] Hotel & Charge—Charge—Margin & Tax—Margin Rate for "Telephone" (%)

It is possible to print out a bill for a guest. The bill will show the following items:

[Example of Call Billing Sheet]

```
      ****************************************
(1)   *                 Hotel                *
      ****************************************
(2)   Check in  : 01.JAN.00 06:31PM
(3)   Check out : 03.JAN.00 07:03AM
(4)   Room      :  202 : Mr. Smith

(5)   01/01/00 06:52PM  202 01 Call amount:0012  01:24'30 00084.50 001
      02/01/00 06:07PM  202 01 123456789         00:10'12 00010.20 1234567890
      02/01/00 07:30PM  202 01 012345678901234   00:06'36 00006.60 12345
      02/01/00 08:45PM  202 01 0011234567890123  00:03'00 00003.00 12345

(6)   Telephone                   104.30 (Tax   10.000% =    9.48)
      Minibar                       4.00 (Tax   10.000% =    0.36)
      Others                        0.00 (Tax   15.000% =    0.00)
      ---------------------------------------------------------------
(7)   Total                FR    108.30 (Tax Total     =    9.84)

(8)   Sheet : 002

(9)   ======= Hotel TDAPBX =======
      Tel: +41 3 12 34 56 78  Fax: +41 3 12 34 56 78
      E-Mail: 12345678@hoteltdapbx.ch
```

(1) A programmable title (e.g., hotel name).
→ 2.12.9 [6-8] Hotel & Charge—Bill—SMDR for External Hotel Application—Header 1–3
(2) The check-in time.
(3) The check-out time.
If the guest has already been checked out, the check-out time will be shown. If not, the time that the bill was printed will be shown.
(4) The extension number and name.
(5) A list of all calls made and call charges (using the same format as SMDR output Pattern B [→ 1.26.1 Station Message Detail Recording (SMDR)]).
(6) The total charge for each charge item and tax, including the preprogrammed tax rate.
(7) The combined charges of all three charge items, currency of the charge, and tax.
(8) The sheet number (the number of times that the current guest's charge data has been printed out and then cleared).
(9) A programmable footer (e.g., the contact information of the hotel).
→ 2.12.9 [6-8] Hotel & Charge—Bill—SMDR for External Hotel Application—Footer 1–3

It is possible to select the language used on the guest bill.
→ 2.12.9 [6-8] Hotel & Charge—Bill—SMDR for External Hotel Application—Language for Bill (SMDR)

Walking COS
If guests are given extension personal identification numbers (PINs), it is possible for calls made from other extensions (e.g., an extension in a hotel restaurant) to be charged to the guest's room extension by using the Walking COS feature (→ 1.9.5 Walking COS).
→ 2.10.1 [4-1-1] Wired Extension—Extension Settings—Option 2—Extension PIN

Conditions

- **Hardware Requirement:** An EMEC or MEC card
- If the total number of call records exceeds 90 % of available memory, call records from the extension with the largest number of records will be automatically printed out, and the records printed out will be combined in memory into one aggregate record to save space.

Programming Manual References

PC Programming Manual

2.10.1 [4-1-1] Wired Extension—Extension Settings—Option 2—Extension PIN

2.12.9 [6-8] Hotel & Charge—Checkout Billing—LCD for "Telephone"

2.12.9 [6-8] Hotel & Charge—Charge

→ Margin & Tax—Margin Rate for "Telephone" (%)

→ Margin & Tax—Tax Rate for "Telephone" (%)

→ Margin & Tax—Tax Rate for "Minibar" (%)

→ Margin & Tax—Tax Rate for "Others" (%)

PT Programming Manual

None

Feature Guide References

1.6.1.4 Last Number Redial

1.9.3 Extension Dial Lock

1.26.1 Station Message Detail Recording (SMDR)

1.28.4 Timed Reminder

3.1 Capacity of System Resources

User Manual References

1.11.1 Using the Telephones in a Hotel-type Environment (Hospitality Features)

1.28 Extension Controlling Features

1.28.1 Extension Personal Identification Number (PIN)

Description

Each extension user can have his own PIN through system programming or personal programming (Extension PIN [Personal Identification Number]) to set features or access his own telephone remotely. The following features cannot be used without the PIN:

a) Live Call Screening (LCS)* (→ 1.24.3 Voice Mail DPT (Digital) Integration)

b) Display Lock (→ 1.6.1.5 Speed Dialling—Personal/System, 1.17.8 Built-in Simplified Voice Message (SVM), 1.18.2 Incoming Call Log)

c) Walking Extension (→ 1.28.3 Walking Extension)

d) Extension Dial Lock (→ 1.9.3 Extension Dial Lock)

e) Walking COS (→ 1.9.5 Walking COS)

f) Walking COS through DISA (→ 1.17.6 Direct Inward System Access (DISA))

*: If an extension user has assigned an extension PIN, this feature cannot be used without the PIN.

Conditions

WARNING
There is a risk that fraudulent telephone calls will be made if a third party discovers a personal identification number (PIN) (verification code PIN or extension PIN) of the PBX.
The cost of such calls will be billed to the owner/renter of the PBX.
To protect the PBX from this kind of fraudulent use, we strongly recommend:

a) **Keeping PINs secret.**

b) **Selecting complex, random PINs that cannot be easily guessed.**

c) **Changing PINs regularly.**

- **Extension PIN Lock**
  If the wrong PIN is entered three times, the line will be disconnected. If the wrong PIN is entered a preprogrammed number of times successively, that extension will become locked, and even entering the correct PIN will not unlock it. Only an extension assigned as the manager can unlock it. In this case, the PIN will be unlocked and cleared.
  This feature is also known as Station Password Lock.
- **Remote Extension PIN Clear**
  If an extension user forgets his PIN, a manager can clear the PIN. Then the extension user can assign a new PIN.
- **Extension PIN Display**
  It is possible to select whether to show the extension PIN on the display through system programming. By default, it is shown as dots.

Programming Manual References

PC Programming Manual

2.8.4 [2-3] Timers & Counters—Miscellaneous—Extension PIN—Lock Counter

2.8.8 [2-6-1] Numbering Plan—Main—Features—Extension PIN Set / Cancel

2.8.17 [2-9] System Options—Option 1—PT LCD—Password / PIN Display
2.10.1 [4-1-1] Wired Extension—Extension Settings—Option 2—Extension PIN
2.10.10 [4-2-1] Portable Station—Extension Settings—Option 2—Extension PIN
PT Programming Manual
[005] Extension Personal Identification Number (PIN)

User Manual References

3.1.2 Settings on the Programming Mode
3.2.2 Manager Programming

1.28.2 Extension Feature Clear

Description

Extension users can clear all the following features set on their own telephone at once:

Features	After Setting
Absent Message	**Off**
BGM	**Off**
FWD*/DND*	**Off**
Call Pickup Deny	**Allow**
Call Waiting*	**Disable** (In Canada, the default setting is "Enable" [Call Waiting tone].)
Data Line Security	**Off**
Executive Busy Override Deny	**Allow**
Log-in/Log-out	**Log-in**
Message Waiting	**All messages left by other extensions will be cleared.**
Paging Deny	**Allow**
Parallelled Telephone	**Paired SLT will ring.**
Hot Line*	**Off**
Timed Reminder	**Cleared**

Note

The features with "*" can be programmed not to be cancelled by this feature.

This feature is also known as Station Programme Clear.

Conditions

- Extension Dial Lock (→ 1.9.3 Extension Dial Lock) and the extension personal identification number (PIN) (→ 1.28.1 Extension Personal Identification Number (PIN)) will not be cleared by this feature.
- **For Users in Canada only**
  If dial tone 2 is heard after Extension Feature Clear:
  After performing Extension Feature Clear, Call Waiting will be enabled if "**`Extension Clear: Call Waiting`**" is set to "**`Clear`**" through system programming. In this case, dial tone 2 will be heard when going off-hook. (→ 1.29.1 Dial Tone)

Programming Manual References

PC Programming Manual

2.8.8 [2-6-1] Numbering Plan—Main—Features—Extension Feature Clear

2.8.17 [2-9] System Options—Option 2

→Extension Clear—Call Waiting

→Extension Clear—Fwd/DND

→Extension Clear—Hot Line (Pickup Dial)

PT Programming Manual

None

User Manual References

1.8.13 Clearing Features Set at Your Extension (Extension Feature Clear)

1.28.3 Walking Extension

Description

It is possible to use any extension and have your extension settings available to you. Settings such as extension number, one-touch dialling memory, and COS are all available to you at the new location.
[Example] This feature is useful when:

- Moving location
- There is no specific desk for your use.

This feature is also known as Walking Station.

Conditions

[General]

- This feature allows extension settings to be switched between PT and PT, SLT and SLT, or PT and SLT. Moving between tenants is also possible.
- Incoming calls to your extension will also reach you at your new location.
- An extension personal identification number (PIN) is required to use this feature. (→ 1.28.1 Extension Personal Identification Number (PIN))
- If a DSS Console is connected to a PT and the DSS Console is continuously used with the PT after Walking Extension has been activated, the new extension number of the PT must be assigned as the paired extension through system programming.
- If PC programming is being performed for extensions whose extension settings are being transferred by the Walking Extension feature, the Walking Extension feature may not work properly (→ 2.3.1 PC Programming).

[MPR Software File Version 3.1000 or later]

- This feature also allows extension settings to be switched between IP-PT and IP-PT, IP-PT and PT, or IP-PT and SLT.

Programming Manual References

PC Programming Manual

2.8.8 [2-6-1] Numbering Plan—Main—Features—Walking Extension

2.10.1 [4-1-1] Wired Extension—Extension Settings—Option 2—Extension PIN

2.10.17 [4-3] DSS Console—Flexible Button—Pair Extension

PT Programming Manual

[007] DSS Console Paired Telephone

User Manual References

1.12.1 Using the Same Settings as Your Previous Extension (Walking Extension)

1.28.4 Timed Reminder

Description

An extension can be preset to ring at a certain time, to act as a wake-up call or reminder. This feature can be programmed to activate only once, or daily. If the user answers the alarm call, a prerecorded voice message will be heard. If a message is not assigned, a special dial tone (dial tone 3) will be heard. Timed reminders can be set in one of two ways:

- By the extension user, from his own extension.
- Remotely, by the hotel operator (Remote Wake-up Call)

Conditions

- Be sure that the PBX clock works.
- Only one timed reminder can be set for an extension at a time. Setting a new reminder clears the previous reminder. If both the extension user and the hotel operator set a timed reminder for the same extension, the timed reminder that was set most recently is effective.
- **Programmable Time**
  The Alarm Ringing Duration time, the number of alarm repeat times, and intervals are programmable through system programming.
- **To use the voice message feature:**
  The MSG card is required and the message must be recorded. An extension assigned as the manager can record messages. (→ 1.17.5 Outgoing Message (OGM)) A different message can be assigned for each time mode (day/lunch/break/night) (→ 2.2.4 Time Service).

Installation Manual References

KX-TDA30

2.5.4 MSG2 Card (KX-TDA3191)

KX-TDA100/KX-TDA200

2.6.6 MSG4 Card (KX-TDA0191)

KX-TDA600

2.8.5 MSG4 Card (KX-TDA0191)

Programming Manual References

PC Programming Manual

2.8.4 [2-3] Timers & Counters—DISA / Door / Reminder / U. Conf

→Timed Reminder—Repeat Counter

→Timed Reminder—Interval Time

→Timed Reminder—Alarm Ringing Duration

2.8.8 [2-6-1] Numbering Plan—Main—Features

→Remote Timed Reminder (Remote Wakeup Call)

→Timed Reminder Set / Cancel

2.8.16 [2-8-3] Ring Tone Patterns—Call from Others—Timed Reminder—Ring Tone Pattern Plan 1–8

2.8.17 [2-9] System Options—Option 1—PT LCD—Time Display

2.11.3 [5-3-1] Voice Message—DISA System—Timed Reminder Message - Day, Lunch, Break, Night

2.17.1 [11-1] Main—SMDR—SMDR for External Hotel Application 1—Timed Reminder (Wake-up Call)

PT Programming Manual

None

Feature Guide References

1.27.2 Room Status Control

User Manual References

1.8.1 Setting the Alarm (Timed Reminder)

1.11.1 Using the Telephones in a Hotel-type Environment (Hospitality Features)

1.29 Audible Tone Features

1.29.1 Dial Tone

Description

The following distinctive dial tones inform extensions about features activated on their extensions. Each dial tone type has two frequencies (e.g., dial tone 1A and dial tone 1B).

Type	Description
Tone 1A/1B	A normal dial tone is heard when: **a)** No features listed for dial tones 2 through 4 has been set, or **b)** ARS is used.

Tone 2A/2B	This tone is heard when:
	• There are messages that have previously been listened to and no new messages on the SVM card.*
	• Any of the features below are set.
	  • Absent Message
	  • BGM
	  • FWD
	  • Call Pickup Deny
	  • Call Waiting
	  • DND
	  • Extension Dial Lock
	  • Executive Busy Override Deny
	  • Hot Line
	  • Timed Reminder

Tone 3A/3B	This tone is heard when:
	• A called PS is being searched for.
	• The recording time used by the Built-in Simplified Voice Message feature reaches the limit.*
	• Any of the features below are performed.
	  • Account Code Entry
	  • Consultation Hold
	  • Answering a Timed Reminder call with no message
	  • Answering a sensor call

Tone 4A/4B	This tone is heard when new messages have been recorded for the extension.

*: Active even when distinctive dial tones are disabled.

Conditions

- **Dial Tone Type A/B**
  It is possible to select dial tone type A or B for dial tones 1 through 4. If "**Type A**" is selected, all dial tones 1 through 4 will become dial tone type A.
  The dial tone type for the ARS feature can be selected separately. If "**Type A**" is selected for the ARS, dial tone 1A will be heard. If "**Type B**" is selected, dial tone 1B will be heard.
- Distinctive dial tones can be disabled. When disabled, dial tone 1 will be heard in all cases except those marked with "*" in the table above.
- **Dial Tone Patterns**
  All dial tone patterns have a default (→ 3.3.1 Tones/Ring Tones).
- Only dial tone 1 is sent to the extensions in the VM (DPT/DTMF) group. (→ 1.24.1 Voice Mail (VM) Group)

Programming Manual References

PC Programming Manual

2.8.17 [2-9] System Options—Option 3

→Dial Tone—Distinctive Dial Tone

→Dial Tone—Dial Tone for Extension

→Dial Tone—Dial Tone for ARS

PT Programming Manual

None

1.29.2 Confirmation Tone

Description

At the end of feature operations, the PBX confirms the success of the operation by sending a confirmation tone to extension users.

Type	Description
Tone 1	**a)** Sent when the setting is accepted. **b)** Sent when a call is received in voice-calling mode (Alternate Receiving—Ring/Voice). The caller's voice will be heard after the tone.
Tone 2	**a)** Sent from an external paging device or an extension before being paged. **b)** Sent when a call is received in Hands-free Answerback mode.
Tone 3-1	**a)** Sent before a conversation is established when using the Paging feature. **b)** Sent when a conversation is established with the extension in the following modes after the call making operation: • Hands-free Answerback mode • Voice-calling mode (Alternate Receiving—Ring/Voice) **c)** Sent when making a call to or from a doorphone.
Tone 3-2	Sent just before a conversation is established when accessing the following features by the feature numbers: • Call Park Retrieve • Call Pickup • Hold Retrieve • Paging Answer • TAFAS
Tone 4-1	Sent when moving from a two-party call to a three-party call. (e.g., Executive Busy Override, Conference, Privacy Release, Two-way Record.)
Tone 4-2	Sent when moving from a three-party call to a two-party call. (e.g., Executive Busy Override, Conference, Privacy Release, Two-way Record.)
Tone 5	Sent when a call is placed on hold (including Consultation Hold).

Conditions

- **Confirmation Tone Patterns**
  All confirmation tone patterns have a default (→ 3.3.1 Tones/Ring Tones).
- It is possible to eliminate each tone.

Programming Manual References

PC Programming Manual

2.8.17 [2-9] System Options—Option 3

→ Confirmation Tone—Tone 1 : Doorphone / Called by Voice

→ Confirmation Tone—Tone 2 : Paged / Automatic Answer

→ Confirmation Tone—Tone 3-1 : Start Talking after making call

→ Confirmation Tone—Tone 3-2 : Start Talking after answering call

→ Confirmation Tone—Tone 4-1 : Start Conference

→ Confirmation Tone—Tone 4-2 : Finish Conference

→ Confirmation Tone—Tone 5 : Hold

PT Programming Manual

None

1.30 Networking Features

1.30.1 TIE Line Service

Description

A TIE line is a privately leased communication line between two or more PBXs, which provides cost effective communications between company members at different locations. The TIE lines can be used to call through the PBX to reach another switching system (PBX or telephone company). By using TIE lines, the PBX can support not only communications with the public network but with other company members in the private network where the PBX is included.

Interface

The following interfaces can be used to establish a private network:

Interface	Network Type
E & M	Analogue
T1 (TIE [E & M])	Digital (64 kbps × 24 channels)
E1 (E & M)	Digital (64 kbps × 30 channels)
BRI/PRI (QSIG)	Digital (ISDN 2B+D/30B+D/23B+D)
VoIP	Internet Protocol (IP)

The available interfaces depend on the cards installed in the PBX.

→ 2.7.14 [1-1] Slot—BRI Port—Network Numbering Plan—Trunk Property (for CO port)
→ 2.7.16 [1-1] Slot—PRI Port (KX-TDA100/KX-TDA200/KX-TDA600 only)—Network Numbering Plan—Trunk Property (for CO port)
→ 2.7.19 [1-1] Slot—T1 Port (KX-TDA100/KX-TDA200/KX-TDA600 only)—Trunk Property (for TIE channel)
→ 2.7.25 [1-1] Slot—E1 Port—Trunk Property (for E & M channel)
→ 2.7.28 [1-1] Slot—E&M Port (KX-TDA100/KX-TDA200/KX-TDA600 only)—Trunk Property

Explanation

1. **Making a TIE Line Call**
   One of the following two methods can be used to make a TIE line call.
   a) **Extension Number Method (Access without PBX Code)**
      Dial the [Extension Number] only.

[Example]

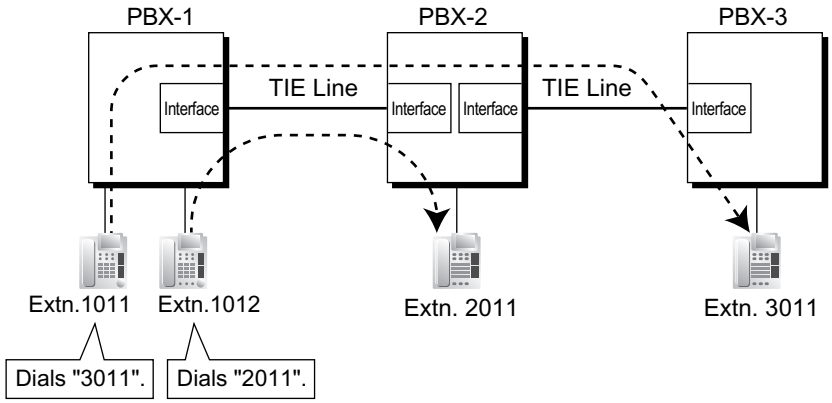

Explanation:
To use this method, it is necessary to change the first one or two digits of extension numbers of either PBX (e.g., 10XX for PBX-1, 20XX for PBX-2) to allow calls to be routed properly.

Case 1:

Extension 1012 of PBX-1 dials extension number "2011".
→ Extension 1012 of PBX-1 is connected to extension 2011 of PBX-2.

Case 2:

Extension 1011 of PBX-1 dials extension number "3011".
→ Extension 1011 of PBX-1 is connected to extension 3011 of PBX-3.

b) PBX Code Method (Access with PBX Code)

Dial the [TIE Line Access Number] + [PBX Code] + [Extension Number].
→ 2.8.8 [2-6-1] Numbering Plan—Main—Features—TIE Line Access
→ 2.15.1 [9-1] TIE Table—Own PBX Code

[Example]

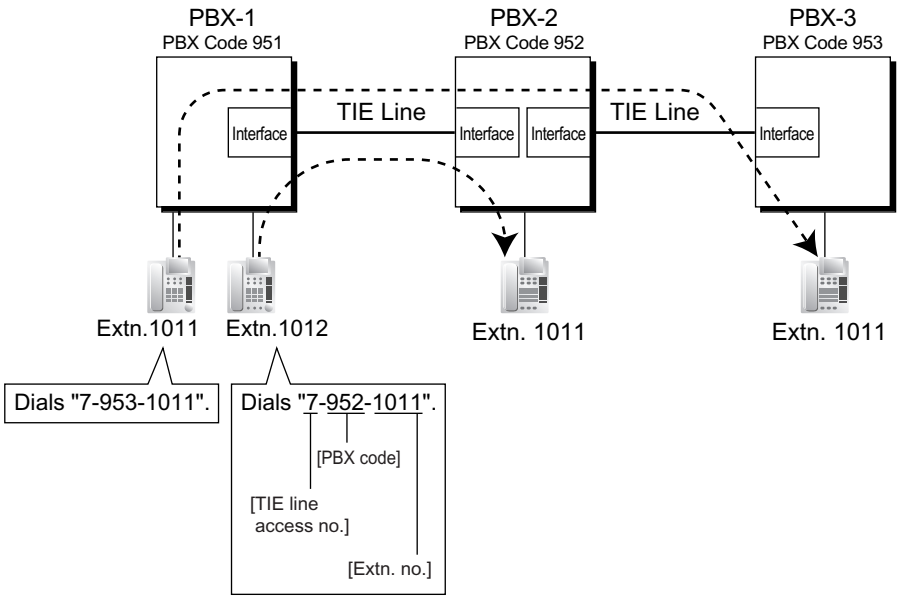

Explanation:
To use this method, it is necessary to know each PBX code in order to identify the location of an extension.

Case 1:

Extension 1012 of PBX-1 dials TIE line access number "7", PBX code "952", and extension number "1011".
→ Extension 1012 of PBX-1 is connected to extension 1011 of PBX-2.

Case 2:

Extension 1011 of PBX-1 dials TIE line access number "7", PBX code "953", and extension number "1011".
→ Extension 1011 of PBX-1 is connected to extension 1011 of PBX-3.

2. TIE Line and Trunk Connection

To connect the TIE line with the trunk, the following patterns are available:

1) Trunk-to-TIE Access

2) TIE-to-Trunk Access

3) Trunk-to-TIE-to-Trunk Access

2.1 Trunk-to-TIE Access

It is possible to assign an extension of another PBX as the destination of incoming trunk calls to the own PBX.

It is also possible to forward calls using a virtual PS. Using this method, trunk calls received at PBX-1 are forwarded directly to the extension at PBX-2, even when using the PBX Code method.

a) Incoming Trunk Call Destination Assignment

[Example]

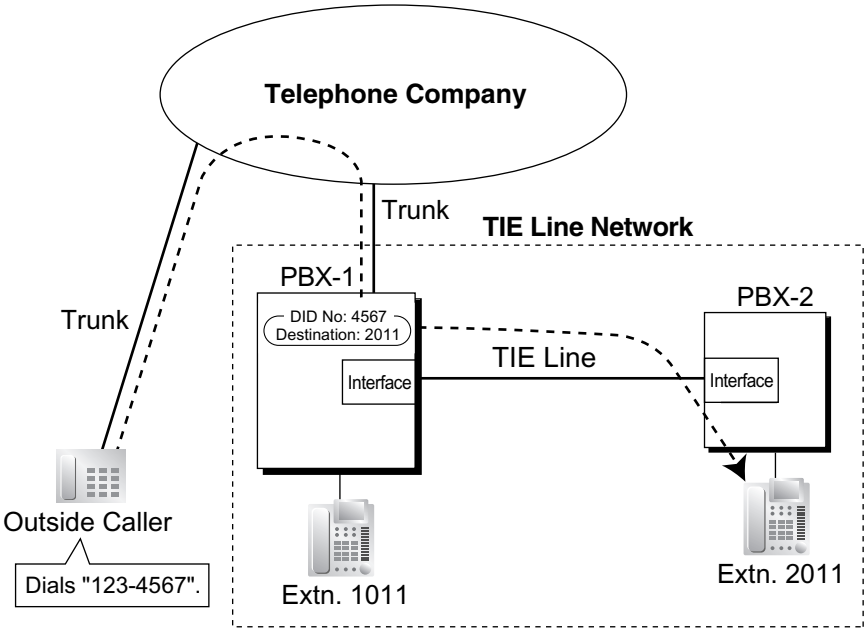

Explanation:

An outside caller dials "123-4567". The call is sent to extension "2011" of PBX-2 through the TIE line according to the assignment of the DID call destination of PBX-1. (→ 1.1.1.3 Direct Inward Dialling (DID)/Direct Dialling In (DDI))
→ 2.16.3 [10-3] DDI / DID Table—DDI / DID Destination—Day, Lunch, Break, Night
→ [453] DID Destination

b) FWD/Call Transfer/Intercept Routing to the TIE Line

[Example]

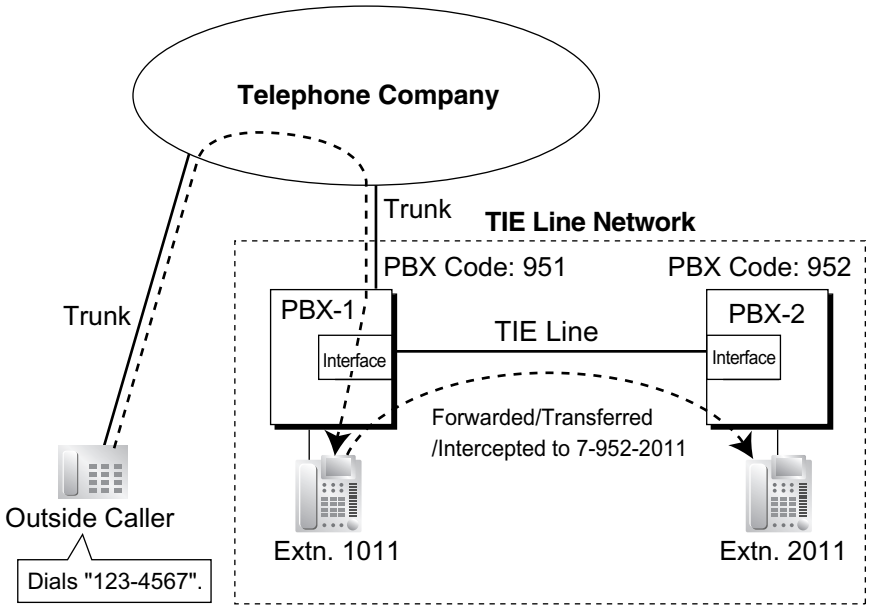

Explanation:

An outside caller dials "123-4567". The call reaches the destination (extension 1011 of PBX-1), and the call is forwarded, transferred, or intercepted to extension "2011" of PBX-2 through the TIE line.

2.2 TIE-to-Trunk Access

The PBX sends TIE line calls to the trunks of another PBX through the TIE lines.

a) Trunk Call through Other PBXs—by Making a TIE Line Call Method

[Example]

<Extension Number Method (Access without PBX Code)>

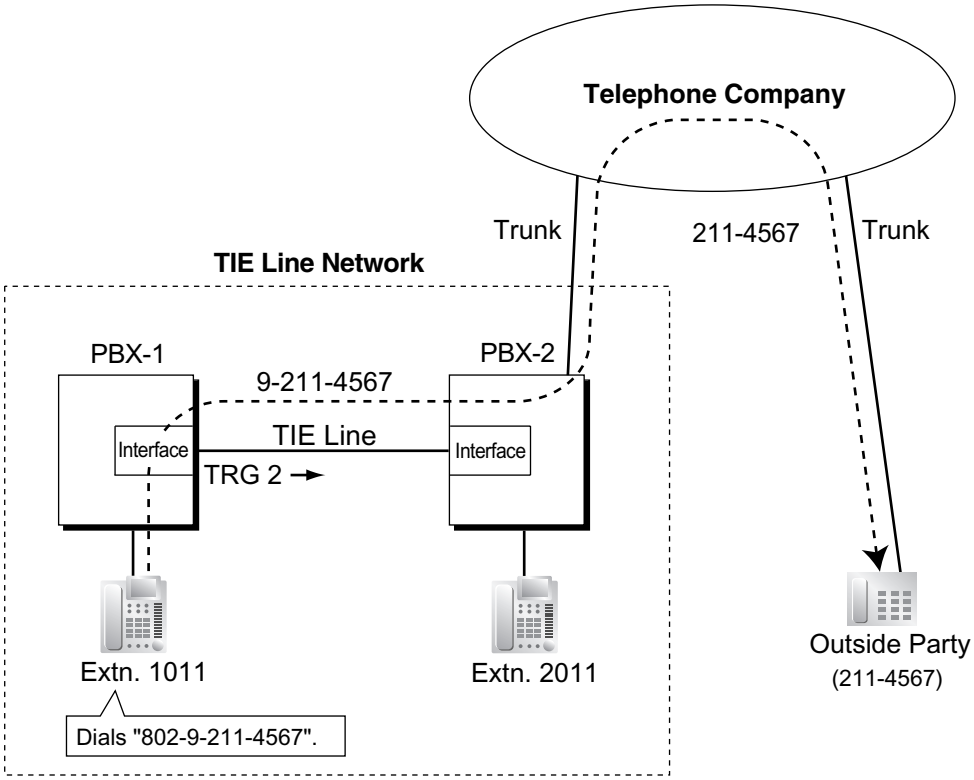

Explanation:

1. Extension 1011 of PBX-1 dials the Trunk Group Access number of PBX-1 "8", trunk group number "02" (TRG2), Idle Line Access number of PBX-2 "9", and telephone number "211-4567".
   → 2.8.8 [2-6-1] Numbering Plan—Main—Features—Trunk Group Access
2. PBX-1 sends the call to PBX-2 through the trunk group (TRG) 2 (TIE line).
3. PBX-2 sends the call to the outside party "211-4567".

<PBX Code Method (Access with PBX Code)>

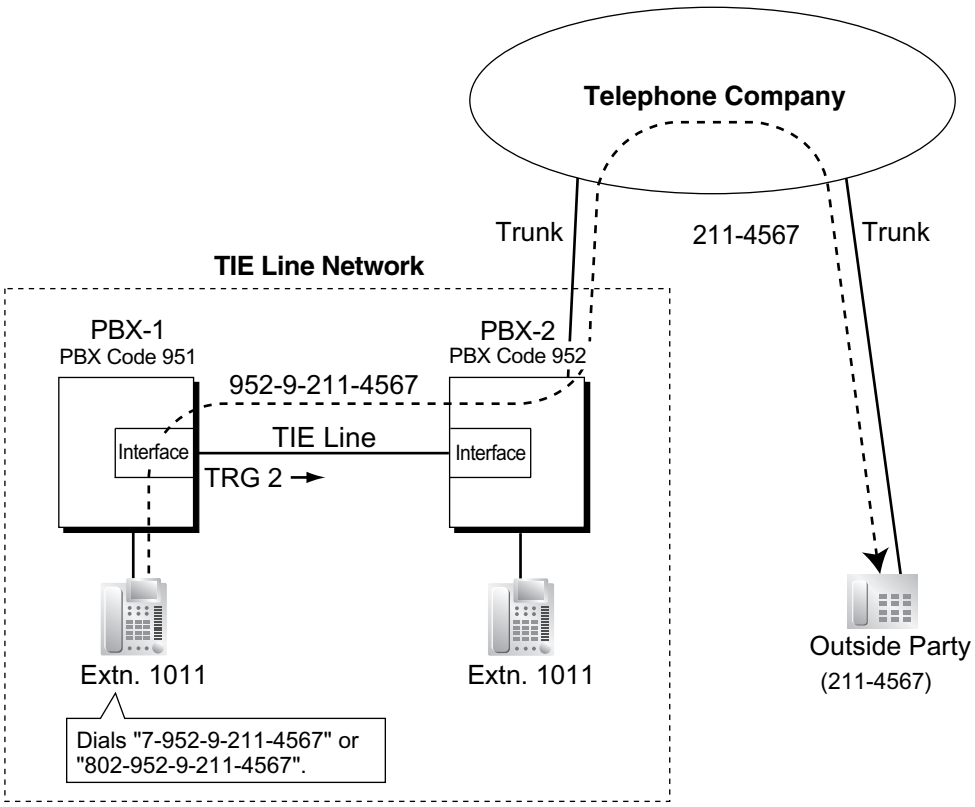

Explanation:

1. Extension 1011 of PBX-1 dials the TIE line access number "7", PBX code "952", Idle Line Access number of PBX-2 "9", and telephone number "211-4567"; or dials the Trunk Group Access number of PBX-1 "8", trunk group number "02" (TRG2), PBX code "952", Idle Line Access number of PBX-2 "9", and telephone number "211-4567".
2. The call is connected to the outside party "211-4567" through PBX-2 which has PBX code "952".

b) Trunk Call through Other PBXs—by the ARS feature

[Example]

<Extension Number Method (Access without PBX Code)>

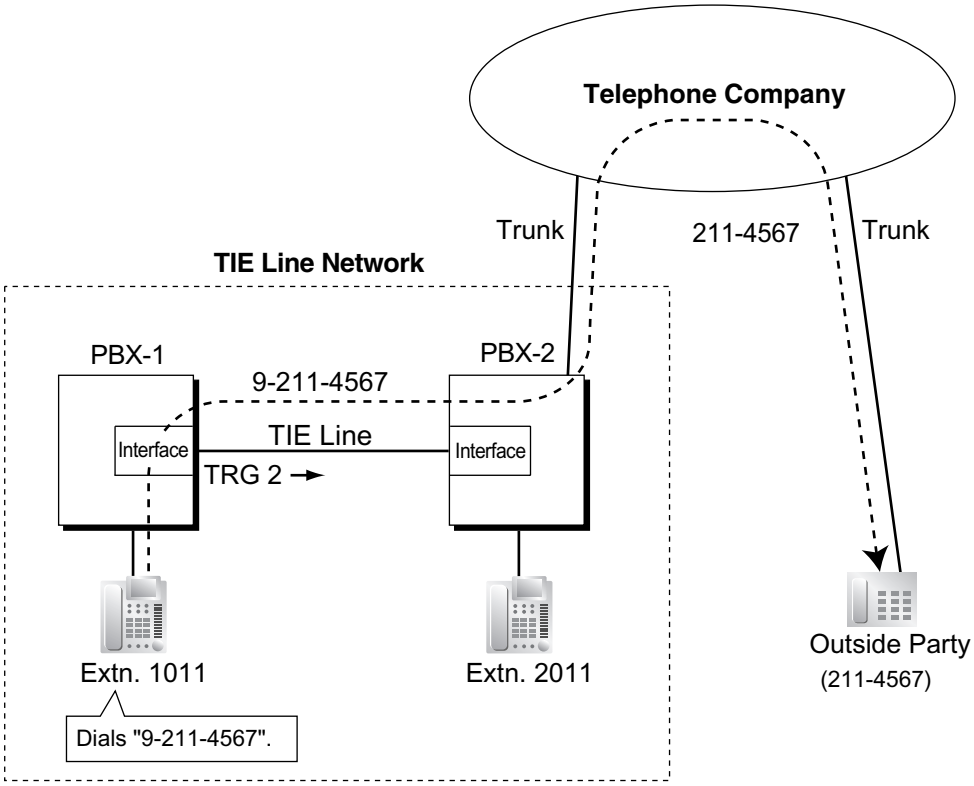

Explanation:

1. Extension 1011 of PBX-1 dials the Idle Line Access number of PBX-1 "9" and telephone number "211-4567".
2. PBX-1 modifies the call (adds the Idle Line Access number of PBX-2 "9") and sends the call to PBX-2 through the TIE line (trunk group [TRG] 2) according to the ARS programming of PBX-1.
3. PBX-2 sends the call to the outside party "211-4567".

<PBX Code Method (Access with PBX Code)>

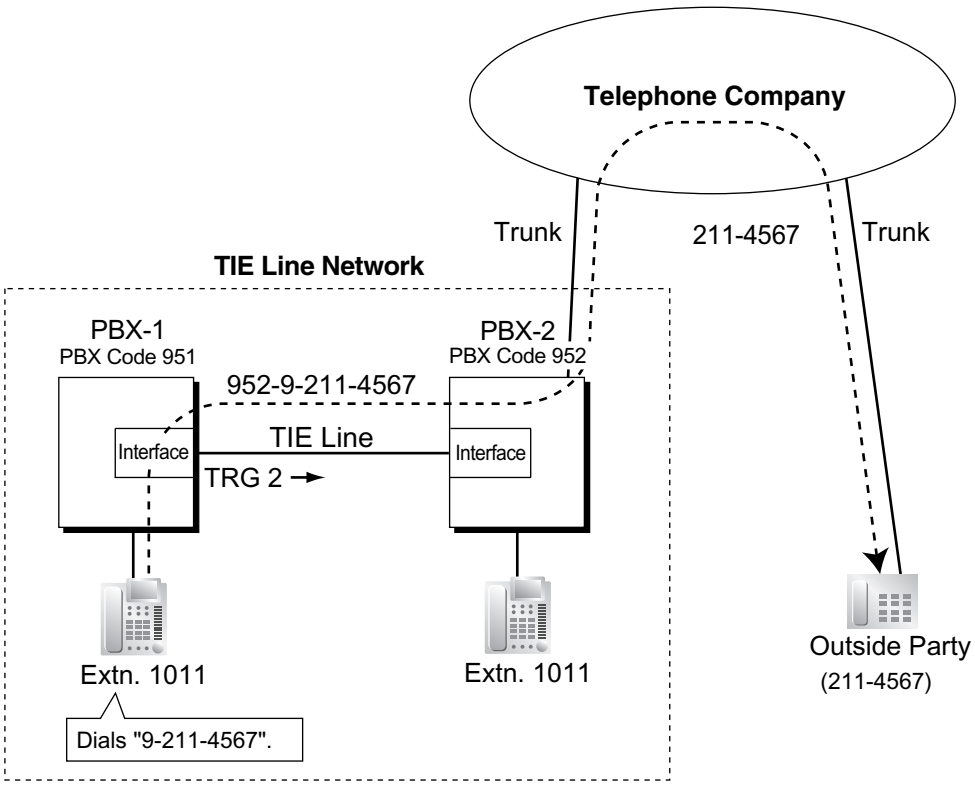

Explanation:

1. Extension 1011 of PBX-1 dials the Idle Line Access number of PBX-1 "9" and telephone number "211-4567".
2. PBX-1 modifies the call (adds "952" and the Idle Line Access number of PBX-2 "9") and sends the call to PBX-2 which has PBX code "952" through the TIE line (trunk group [TRG] 2) according to the ARS programming of PBX-1.
3. PBX-2 sends the call to the outside party "211-4567".

c) Blocking trunk calls made through another PBX and how to override it:

Whether an incoming TIE line call can make a trunk call through this PBX (i.e., PBX-2), depends on the COS that is assigned to the trunk group of this PBX, that the incoming TIE line is connected to. If the COS of the trunk group is unable to make outgoing calls by the Toll Restriction/Barring feature or External Call Block feature, trunk calls made through this PBX will be prohibited.
To override this prohibition, an extension of PBX-1 must enter a verification code assigned to PBX-2 to change the COS temporarily. It is also possible to override the prohibition by specifying an extension at PBX-2 with the Walking COS feature, to temporarily switch to that extension's COS.

→ 2.8.11 [2-7-1] Class of Service—COS Settings—TRS—TRS Level—Day, Lunch, Break, Night
→ 2.9.1 [3-1-1] Trunk Group—TRG Settings—Main—COS
→ 2.12.3 [6-3] Verification Code
→ [500] Trunk Group Number

[Programming Example of PBX-2]

Trunk Group No.	COS No.
1	3
2	2
3	2
:	:

TRG of Incoming Call	Outgoing Call			
	TRG 1	TRG 2	TRG 3	…
COS 1		✔	✔	
COS 2	✔	✔		✔
COS 3		✔	✔	✔
:	:	:	:	:

✔ : Block

[Example]

<Extension Number Method (Access Without PBX Code)>

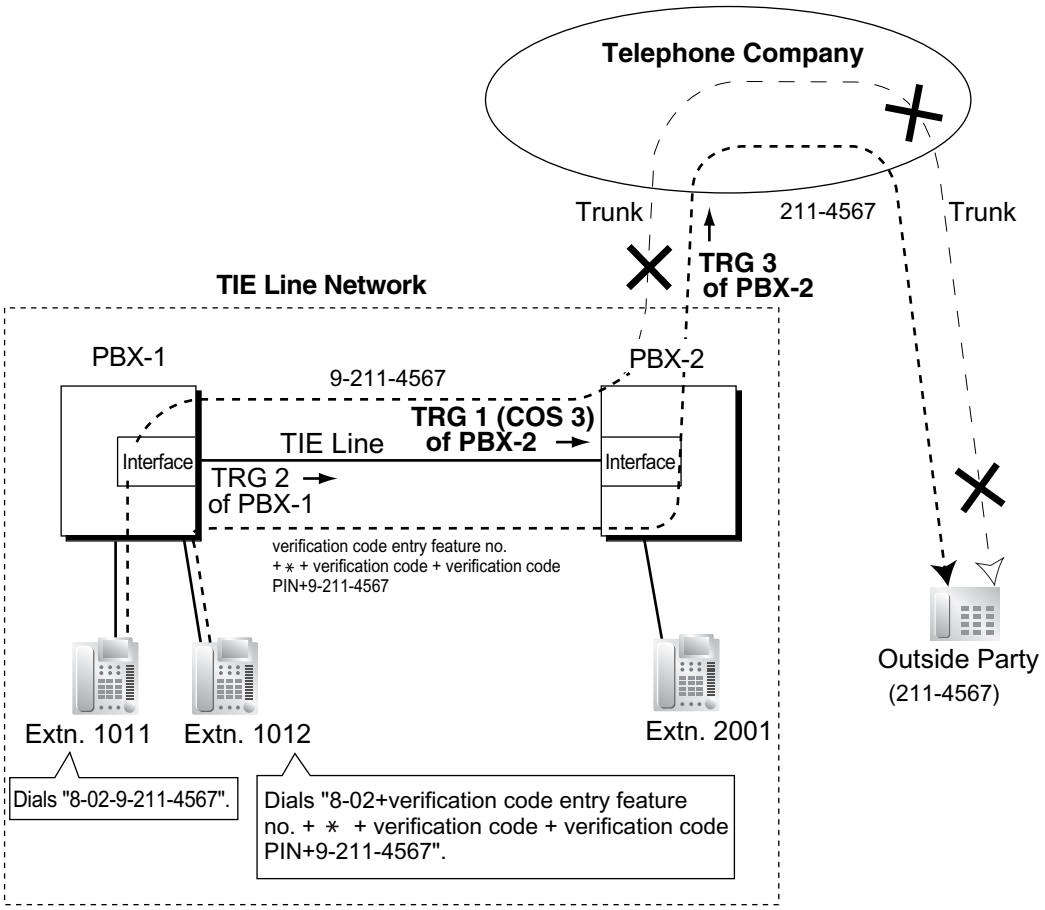

Explanation:

Case 1:

1. Extension 1011 of PBX-1 dials the Trunk Group Access number of PBX-1 "8", TIE line trunk group number (TRG 2), Idle Line Access number of PBX-2 "9", and the telephone number "211-4567".
2. The call is not connected to the outside party through PBX-2 because the COS of TRG 1 (COS 3) is blocked from accessing TRG 3 of PBX-2.

Case 2:

1. Extension 1012 of PBX-1 dials the Trunk Group Access number of PBX-1 "8", TIE line trunk group (TRG2), verification code entry feature number , ⁎, verification code, verification code personal identification number (PIN), Idle Line Access number of PBX-2 "9", and the telephone number "211-4567".
2. If the specified verification code applies COS 2 of PBX-2, the call is connected to the outside party through PBX-2, because COS 2 is not blocked from accessing TRG 3 of PBX-2.

<PBX Code Method (Access with PBX Code)>

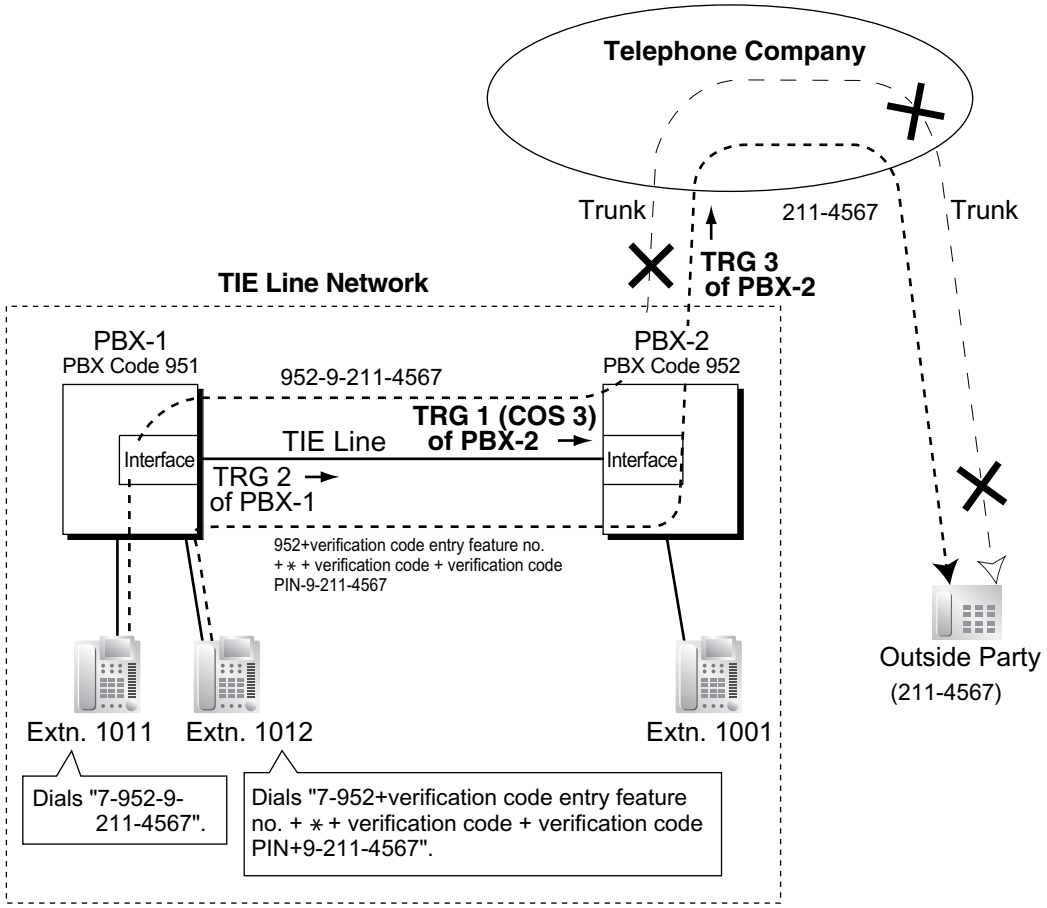

Explanation:

Case 1:

1. Extension 1011 of PBX-1 dials the TIE line access number "7", PBX code "952", Idle Line Access number of PBX-2 "9", and the telephone number "211-4567".
2. The call is not connected to the outside party through PBX-2 because the COS of TRG 1 (COS 3) is blocked from accessing TRG 3 of PBX-2.

Case 2:

1. Extension 1012 of PBX-1 dials the TIE line access number "7", PBX code "952", verification code entry feature number, ✳, verification code, verification code personal identification number (PIN), Idle Line Access number of PBX-2 "9", and the telephone number "211-4567".
2. If the specified verification code applies COS 2 of PBX-2, the call is connected to the outside party through PBX-2, because COS 2 is not blocked from accessing TRG 3 of PBX-2.

d) FWD/Call Transfer/Intercept Routing to the Trunk

[Example]

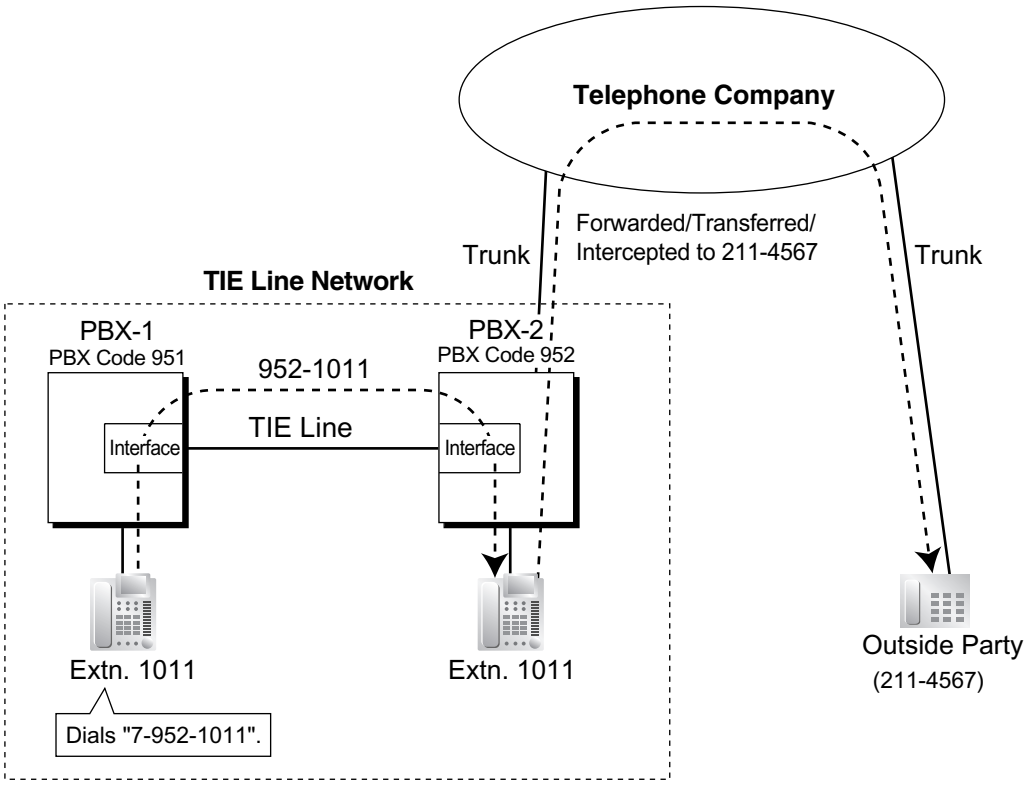

Explanation:

1. Extension 1011 of PBX-1 dials the TIE line access number "7", PBX code "952", and extension number "1011".
2. The call reaches the destination (extension 1011 of PBX-2) through the TIE line, and the call is forwarded, transferred or intercepted to the outside party "211-4567" through the trunk.

2.3 Trunk-to-TIE-to-Trunk Access

An outside caller can be connected to an outside party through the TIE line by using the DISA feature.

[Example]

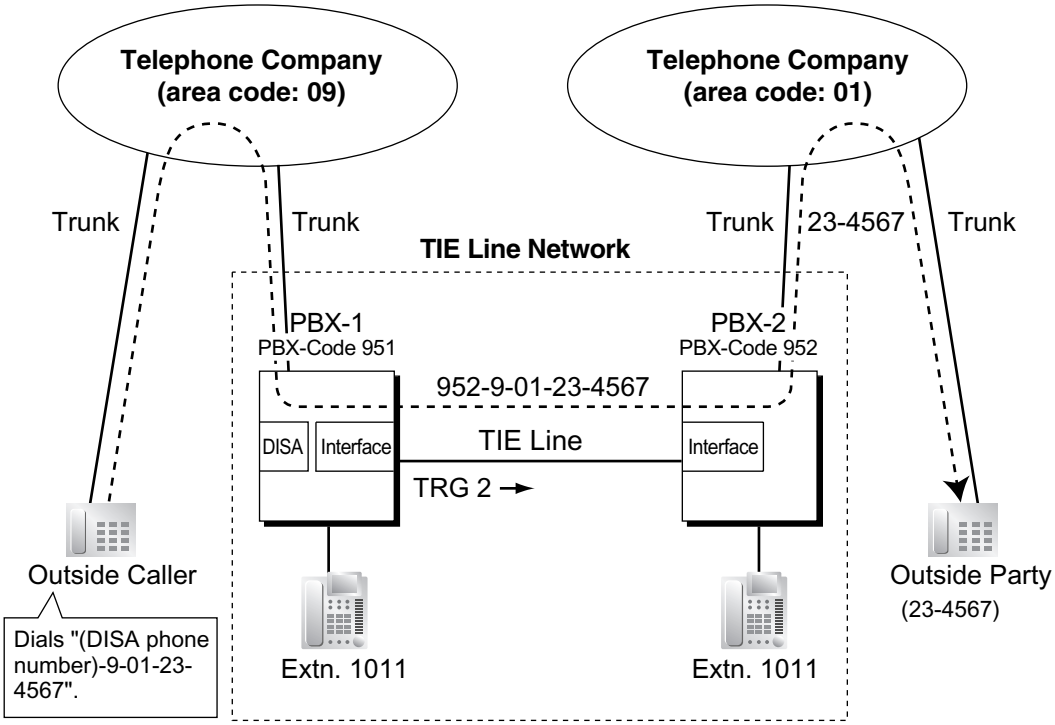

Explanation:

1. The outside caller dials the "DISA phone number of PBX-1", Idle Line Access number of PBX-1 "9", and telephone number "01-23-4567".
2. PBX-1 modifies the call (adds "952" and the Idle Line Access number of PBX-2 "9") and sends the call to PBX-2 which has PBX code "952" through the TIE line (trunk group [TRG] 2) according to the ARS programming of PBX-1.
3. PBX-2 sends the modified call to the outside party "23-4567" according to its ARS programming.

3. TIE Line Routing and Modification Table

3.1 To Make a TIE Line Call

The TIE Line Routing and Modification Table is referenced by the PBX to identify the trunk route when an extension user makes a TIE line call.

It is necessary to make unified tables with all PBXs in the TIE line network.

The routing pattern appropriate for each call is decided by the dialled number.

There are two system programmes for the tables:

TIE Line Routing Table: used to assign the leading numbers (PBX code or extension number) and trunk group hunt sequence.
→ 2.15.1 [9-1] TIE Table—Leading Number

TIE Modify Removed Number of Digits/Added Number: used to remove digits from and add a number to the dialled number of the TIE line call. This modification may be needed depending on the TIE line network configuration.
2.15.1 [9-1] TIE Table
→ Removed Number of Digits
→ Added Number
→ Trunk Group

[Programming Examples]

Your PBX is PBX-1 and there are four PBXs in your TIE line network. To identify the trunk route as illustrated, you should make the following tables.

a) Extension Number Method (Access without PBX Code)
2.8.8 [2-6-1] Numbering Plan—Main—Other PBX Extension—Dial

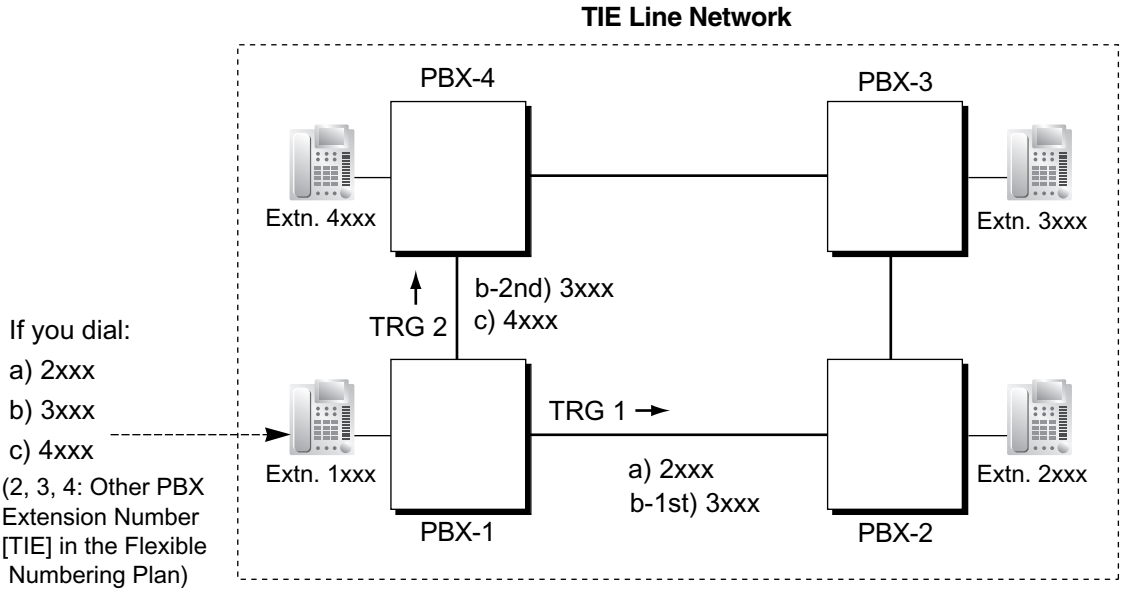

[TIE Line Routing and Modification Table of PBX-1]

Location No.	Leading No.	Priority 1			Priority 2			. .
		TRG	Dial Modification		TRG	Dial Modification		. .
			Removed No. of Digits	Added No.		Removed No. of Digits	Added No.	. .
01	2	1	0					. .
02	3	1	0		2	0		. .
03	4	2	0					. .
:	:	:	:	:	:	:	:	:

Explanation:

Location 01:

The hunt sequence by dialling [2XXX]:

The 1st route—trunk group (TRG) 1 ➡ Sending no. to PBX-2: 2XXX

Location 02:

The hunt sequence by dialling [3XXX]:

The 1st route—trunk group (TRG) 1 ➡ Sending no. to PBX-2: 3XXX

The 2nd route—trunk group (TRG) 2 ➡ Sending no. to PBX-4: 3XXX

Location 03:

The hunt sequence by dialling [4XXX]:

The 1st route—trunk group (TRG) 2 ➡ Sending no. to PBX-4: 4XXX

b) PBX Code Method (Access with PBX Code)

→ 2.8.8 [2-6-1] Numbering Plan—Main—Features—TIE Line Access
→ 2.15.1 [9-1] TIE Table—Own PBX Code

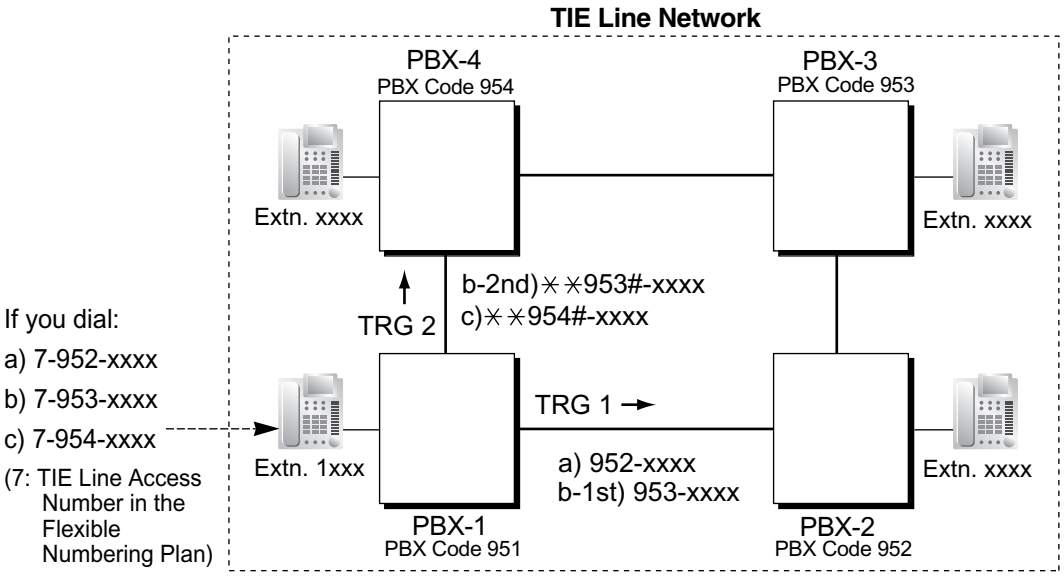

[TIE Line Routing and Modification Table of PBX-1]

Location No.	Leading No.	Priority 1			Priority 2			. .
		TRG	Dial Modification		TRG	Dial Modification		. .
			Removed No. of Digits	Added No.		Removed No. of Digits	Added No.	. .
01	952	1	0					. .
02	953	1	0		2	3	✳✳953#	. .
03	954	2	3	✳✳954#				. .
:	:	:	:	:	:	:	:	:

Explanation:

Location 01:

The hunt sequence by dialling [7+PBX Code 952+XXXX]:

The 1st route — trunk group (TRG) 1

➨ Sending no. to PBX-2: 952–XXXX

Location 02:

The hunt sequence by dialling [7+PBX Code 953+XXXX]:

The 1st route — trunk group (TRG) 1

➨ Sending no. to PBX-2: 953–XXXX

The 2nd route — trunk group (TRG) 2

➨ Sending no. to PBX-4: ✳✳953#–XXXX

Location 03:

The hunt sequence by dialling [7+PBX Code 954+XXXX]:

The 1st route — trunk group (TRG) 2

➡ Sending no. to PBX-4: ✳✳954#–XXXX

3.2 To Receive a TIE Line Call

a) Extension Number Method (Access without PBX Code)

[Example]

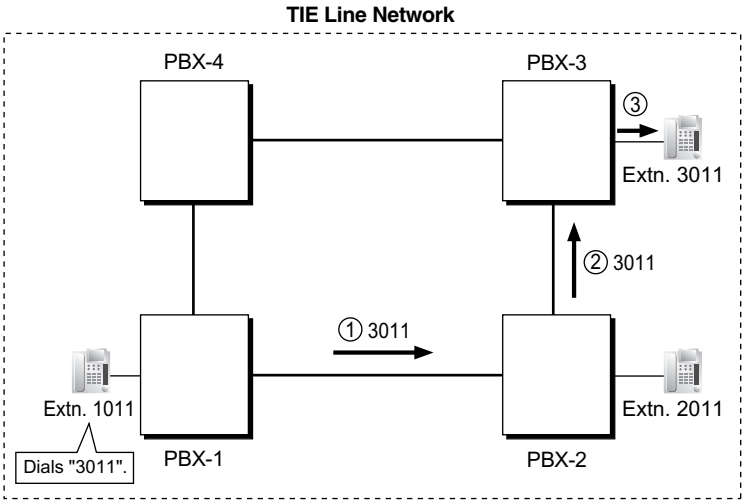

① A TIE line call is sent to PBX-2 from PBX-1. If the number sent from PBX-1 is an extension number of PBX-2 (e.g., 2011), the call will be received at extension "2011". If not, PBX-2 checks the number in the TIE Line Routing and Modified Table of PBX-2.

② If the match is found in the table, the call will be modified according to the table and send to the corresponding PBX (PBX-3).

③ The number sent from PBX-2 "3011" is an extension number of PBX-3. The call is received at extension "3011".

Note

When a TIE line call is sent from one PBX to another, the receiving PBX first modifies the received number according to the assignment for the trunk port: the number of digits removed, and the number added, are determined by this assignment. Then the PBX checks whether the completed number is an existing extension number at that PBX.

b) PBX Code Method (Access with PBX Code)

[Example]

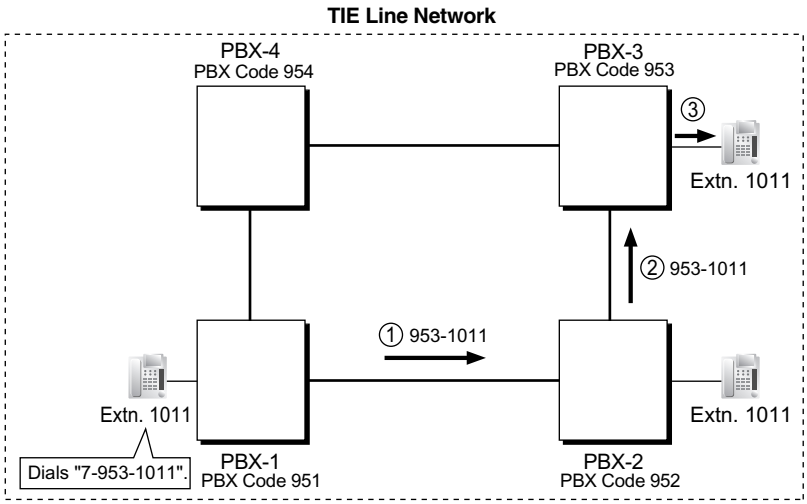

① A TIE line call is sent to PBX-2 from PBX-1. If the number sent from PBX-1 has the PBX code of PBX-2 "952", the call will be received at the corresponding extension of PBX-2 (e.g., 1011of PBX-2). If not, PBX-2 checks the number in the TIE Line Routing and Modified Table of PBX-2.

② If the match is found in the table, the call will be modified according to the table and send to the corresponding PBX (PBX-3).

③ The number sent from PBX-2 "953-1011" has the PBX code of PBX-3 "953". The call is received at extension "1011" of PBX-3.

Note

When a TIE line call is sent to a PBX from another PBX, first the PBX modifies the number sent to the PBX according to the assignment for each trunk port of the PBX: the removed number of digits from and/or added number to the number sent to the PBX is determined by the assignment. Then the PBX starts to check the number whether the number has the PBX code of the PBX.

4. TIE Line Routing Flowchart

[Making a TIE Line Call from an Extension]

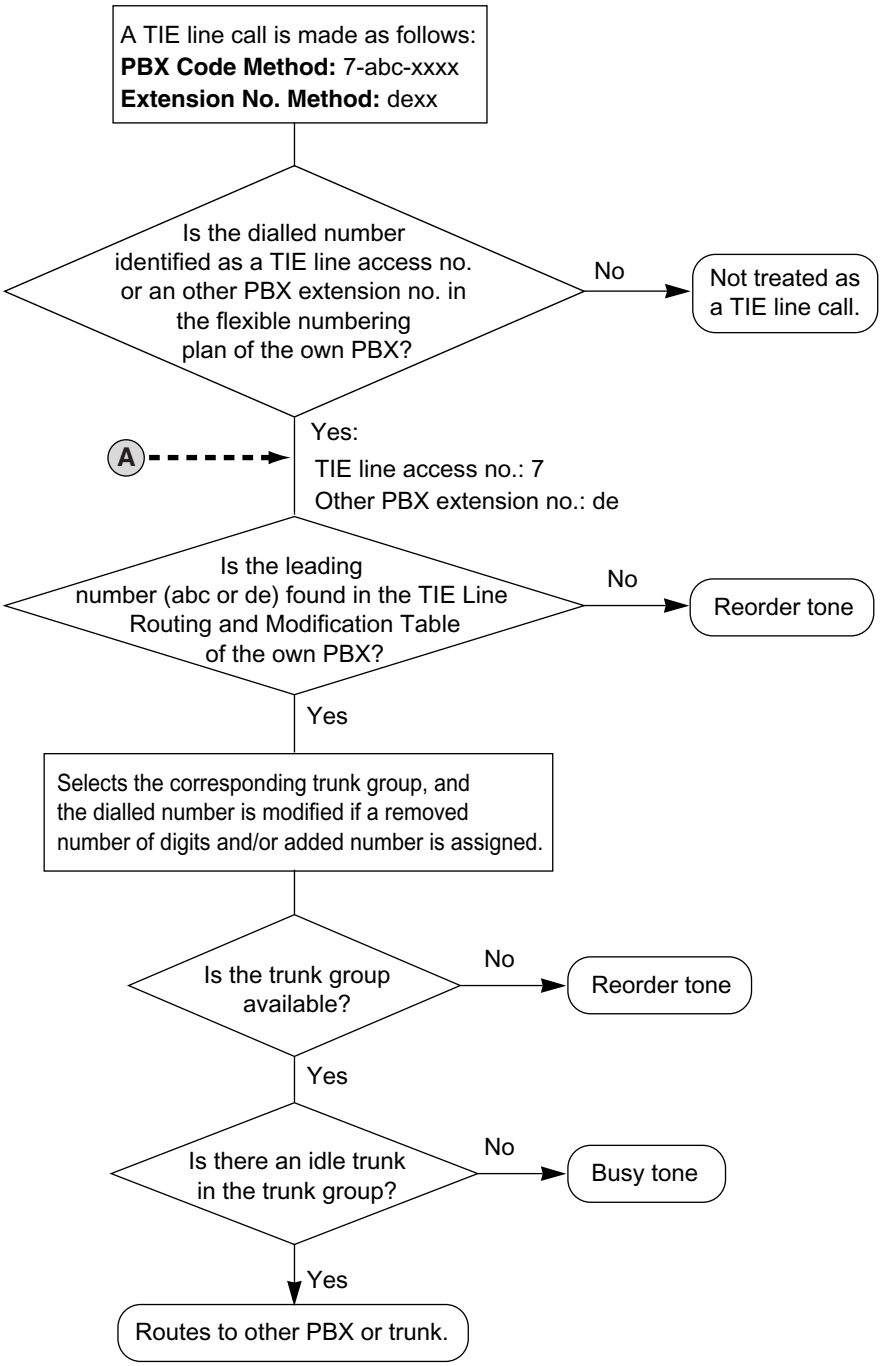

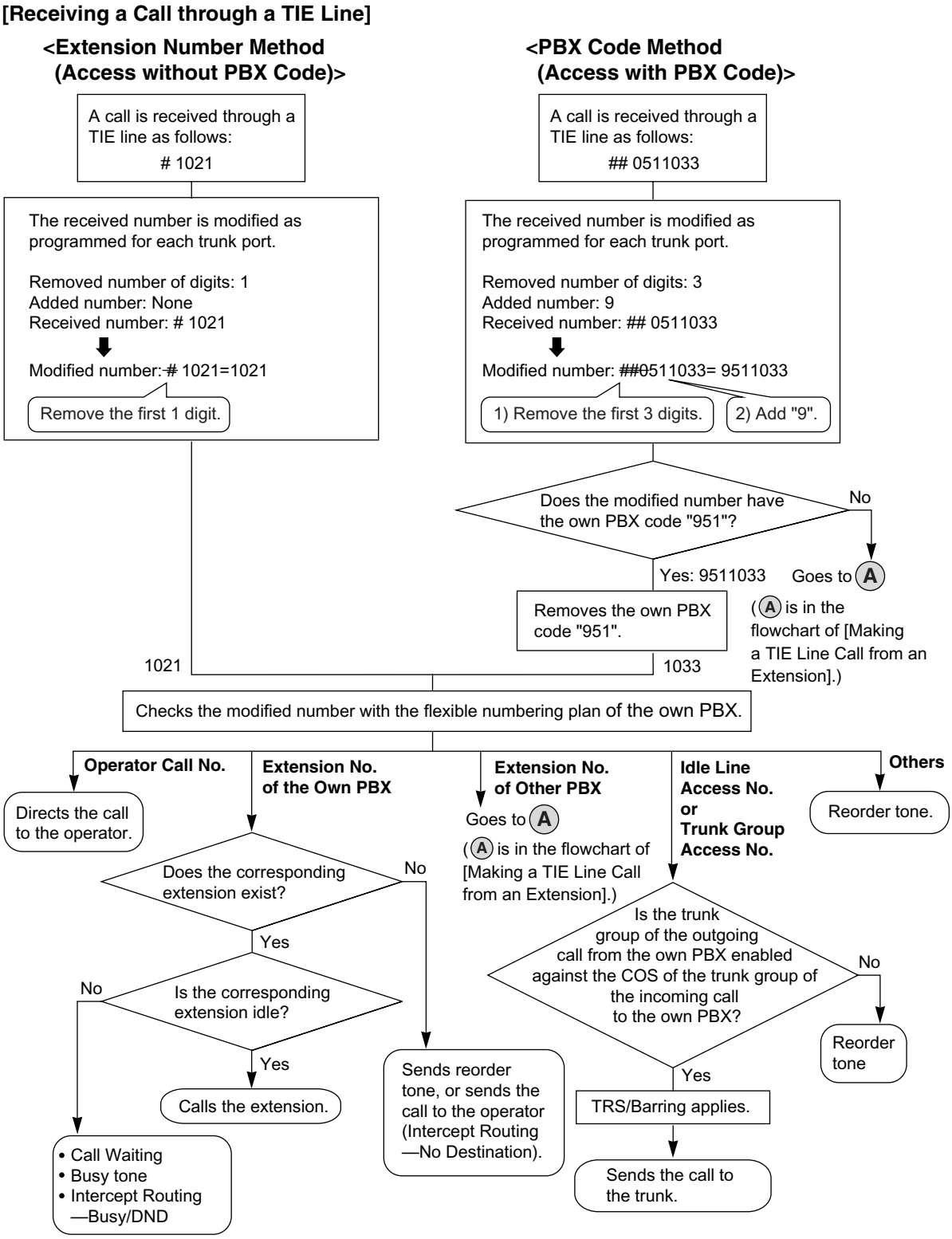

Conditions

- A trunk which is used for a private network should be assigned "**Private**" as the networking type. (→ 1.1.1.1 Incoming Trunk Call Features—SUMMARY)

- To establish a QSIG network (→ 1.30.4 QSIG Standard Features), each ISDN (QSIG) connection in a TIE line network must have the port on one Panasonic Hybrid IP-PBX assigned as a master port, and the port on the other Panasonic Hybrid IP-PBX assigned as a slave port.

[TIE Line Network Connection Example]

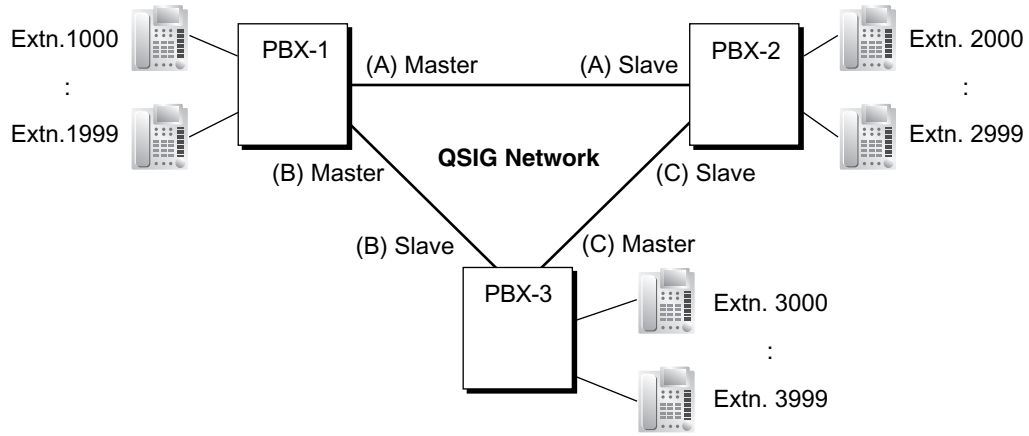

- **[TIE Call by Own PBX Extension Number]**
  When only two PBXs are connected in a network (not including a VoIP network), both PBXs can have extensions with the same leading number.

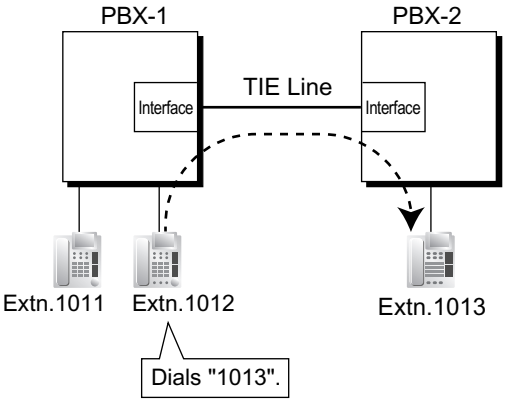

Explanation:
If a dialled number is not found at the local PBX, the call can be sent to the remote PBX.
When an extension number is dialled, the PBX first searches local extensions for a matching number. If there is no match, the PBX then checks the TIE Line Routing Table for a corresponding entry. If an entry is found, the call is sent to the connected PBX.

Case 1:

Extension 1012 of PBX-1 dials extension number "1011".
→ The dialled number is found at the local PBX, so extension 1012 of PBX-1 is connected to extension 1011 of PBX-1.

Case 2:

Extension 1012 of PBX-1 dials extension number "1013".
→ The dialled number is not found at the local PBX, so the call is redirected to the specified TIE Line, and extension 1012 of PBX-1 is connected to extension 1013 of PBX-2.

– **Hardware Requirement**
The KX-TDA6920, KX-TDA0920 or KX-TDA3920 SD Memory Card for Software Upgrade to Enhanced Version
– This feature is not available when the PBXs are connected by a VoIP network.
– System programming is required to enable this feature.

- When a TIE line call arrives at a busy extension which has disabled Call Waiting, the caller will hear a busy tone. If required, Intercept Routing—Busy/DND can be activated.
- The Inter-digit time can be assigned for TIE line calls.
  → 2.8.4 [2-3] Timers & Counters—Miscellaneous—Receiving Dial Inter-digit Timer—TIE

Programming Manual References

PC Programming Manual

2.7.14 [1-1] Slot—BRI Port—Network Numbering Plan—Trunk Property (for CO port)

2.7.16 [1-1] Slot—PRI Port (KX-TDA100/KX-TDA200/KX-TDA600 only)—Network Numbering Plan—Trunk Property (for CO port)

2.7.19 [1-1] Slot—T1 Port (KX-TDA100/KX-TDA200/KX-TDA600 only)—Trunk Property (for TIE channel)

2.7.25 [1-1] Slot—E1 Port—Trunk Property (for E & M channel)

2.7.28 [1-1] Slot—E&M Port (KX-TDA100/KX-TDA200/KX-TDA600 only)—Trunk Property

2.8.4 [2-3] Timers & Counters—Miscellaneous—Receiving Dial Inter-digit Timer—TIE

2.8.8 [2-6-1] Numbering Plan—Main—Features

→ Idle Line Access (Local Access)

→ Trunk Group Access

→ TIE Line Access

2.8.8 [2-6-1] Numbering Plan—Main—Other PBX Extension

2.8.11 [2-7-1] Class of Service—COS Settings—TRS—TRS Level—Day, Lunch, Break, Night

2.8.17 [2-9] System Options—Option 4—Private Network—Common Extension Numbering for 2 PBXs (Optional SD Card Required)

2.9.1 [3-1-1] Trunk Group—TRG Settings—Main—COS

2.15.1 [9-1] TIE Table

2.16.2 [10-2] DIL Table & Port Settings

→ DIL—Trunk Property

→ DIL—DIL Destination—Day, Lunch, Break, Night

→ Port Setting

2.16.3 [10-3] DDI / DID Table—DDI / DID Destination—Day, Lunch, Break, Night

PT Programming Manual

[453] DID Destination

[500] Trunk Group Number

Feature Guide References

1.1.1.6 Intercept Routing

1.3.1.2 Call Forwarding (FWD)

1.9.1 Toll Restriction (TRS)/Call Barring (Barring)

1.10.1 Automatic Route Selection (ARS)

1.12.1 Call Transfer

1.17.6 Direct Inward System Access (DISA)

2.3.6 Flexible Numbering/Fixed Numbering

3.1 Capacity of System Resources

User Manual References

1.2.1 Basic Calling

1.30.2 Voice over Internet Protocol (VoIP) Network

Description

The PBX can connect to another PBX via a private IP network. In this case, voice signals are converted into IP packets (VoIP) and sent through this network.
VoIP networks support private network communications using TIE line service.

[Example]

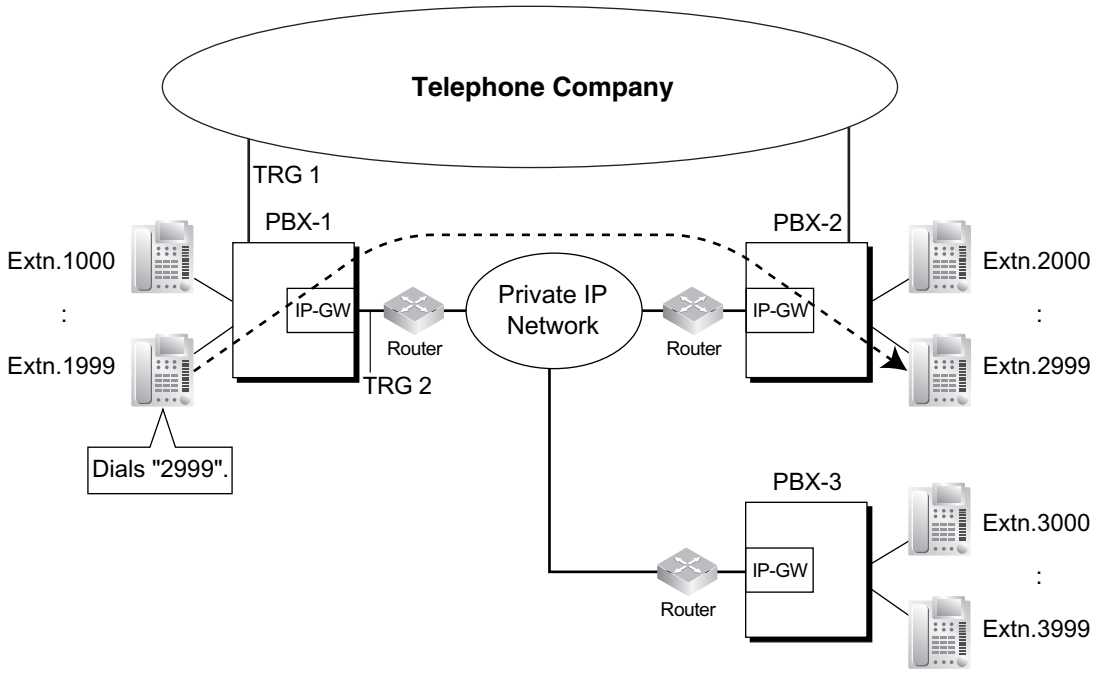

Required Programming

- **PBX**

  For making a call:
  ARS programming (→ 1.10.1 Automatic Route Selection (ARS)) or TIE line service programming

  For receiving a call:
  TIE line service programming

  [TIE Line Routing and Modification Table]

Location No.	Leading No.	Priority 1			Priority 2			. .
		TRG	Dial Modification		TRG	Dial Modification		. .
			Removed No. of Digits	Added No.		Removed No. of Digits	Added No.	. .
01	2	2 (VoIP port)	0					. .
02	3	2	0					. .

Location No.	Leading No.	Priority 1			Priority 2			. .
		TRG	Dial Modification		TRG	Dial Modification		. .
			Removed No. of Digits	Added No.		Removed No. of Digits	Added No.	. .
:	:	:	:	:	:	:	:	:

[Explanation]
Calls to destinations with leading number "2" or "3" are automatically routed through the VoIP ports, designated as trunk group 2.

- **IP-GW (IP Gateway Circuit)**
  IP address assignment for the local PBX and other PBXs.

  [Programming Example]

Destination	
Leading No.	**IP Address**
2	200.45.11.35
3	199.176.64.1
:	:

[Explanation]
Calls are routed to the IP address of each IP-GW card based on the leading number dialled.

Automatic Rerouting of VoIP Calls to Public Trunks

When a VoIP call cannot be completed successfully, the PBX can automatically attempt to make the call using a public trunk instead. This provides a backup method of making calls in cases when IP network transmission cannot be completed successfully.

[Example]

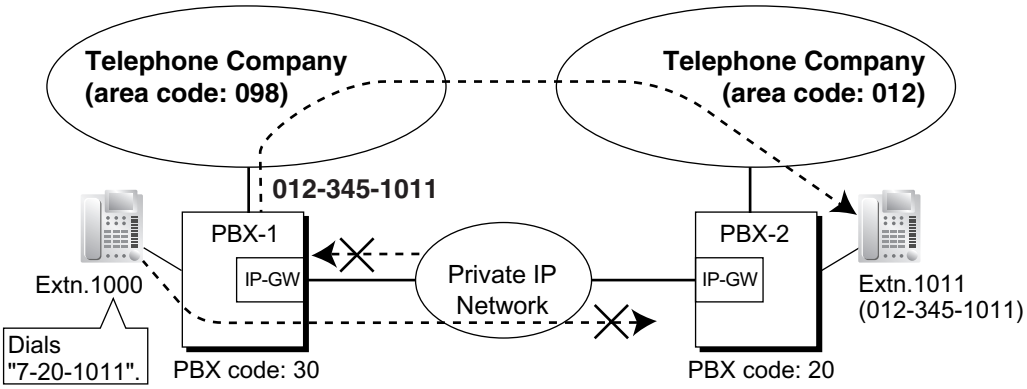

The leading numbers of extensions accessed through the VoIP network are added as entries to the Quick Dialling table, in addition to being registered as Other PBX Extension Numbers, as shown below:

[Programming Example]

Number to dial to call an extension at another PBX using VoIP network:
7 (TIE line access number) + 20 (PBX Code) + 1011 (extension number)

Number to dial to call that extension using a public trunk:
9 (trunk access number) + 012-345-1011

[Quick Dialling Table]

Quick Dialling No.	Destination No.
720	9012345

If the call cannot be completed using the VoIP network, and the dialled leading number is found in the Quick Dialling Table, the call will be automatically rerouted to a trunk as specified by the corresponding destination number.

When a call is made using the VoIP network, if the PBX does not receive a reply from the other PBX within about 4 seconds of making the call, or an error is returned, the call is rerouted to a public trunk as specified.

Conditions

- Some QSIG services are available. (→ 1.30.4 QSIG Standard Features)
- TRS/Call Barring settings apply to calls rerouted to public trunks.

Programming Manual References

PC Programming Manual

2.8.21 [2-12] IP Extension Settings (KX-TDA100/KX-TDA200/KX-TDA600 only) (not available for MPR Software File Version 3.1000 or later)—Gateway Address

PT Programming Manual

None

Feature Guide References

1.30.1 TIE Line Service

1.30.3 Virtual Private Network (VPN)

Description

Virtual Private Network (VPN) is a service provided by the telephone company. It uses an existing line as if it were a private line. There is no need to set up a private line or to lease a line from the telephone company. Making and receiving both public and private calls is possible using the same line.

Public/Private Discrimination:

a) **When making a call:** The public/private discrimination number is required before sending the dialled number to the telephone company. The public/private discrimination number can be dialled manually, or automatically by ARS programming (→ 1.10.1 Automatic Route Selection (ARS)) and/or TIE line service programming.

b) **When receiving a call:** The telephone company distinguishes the call type. If it is a private call, the call is received by the TIE line service method. If it is a public call, the call is received by the Incoming Trunk Call Distribution method (DIL/DDI/MSN) which is assigned on the trunk.

[Example]

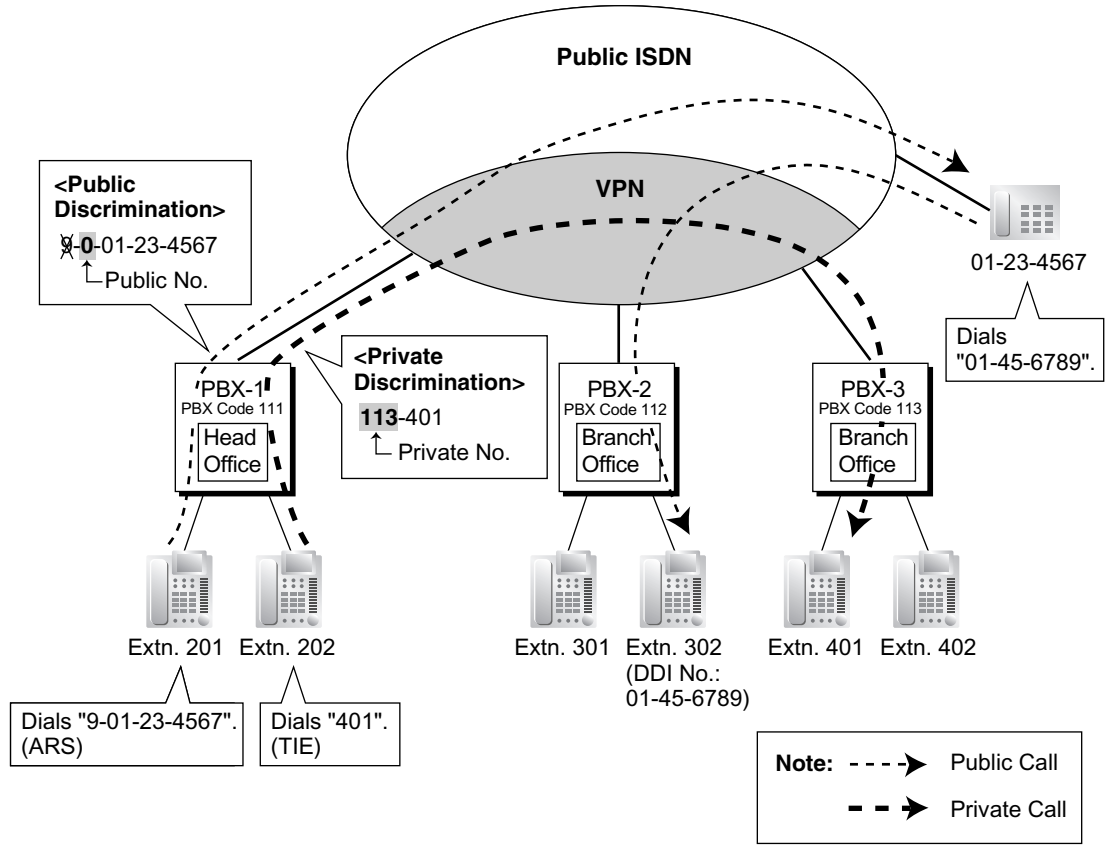

Conditions

- Each BRI/PRI port can be set to public or VPN through system programming. To use this service, select VPN.

- Even if the telephone company does not support the VPN service, it is possible to use the same kind of service when making a call by TIE line service programming, and/or Quick Dialling programming (→ 1.6.1.6 Quick Dialling).

  [Quick Dialling Programming Example]

Location No.	Quick Dialling No.	Desired No.
Quick Dialling 01	2345 (extension no. of other PBX)	9-123-4321 (Public no. of extension 2345)
:	:	:

  Explanation:
  When an extension user dials "2345", he is connected to extension "2345" of other PBX whose public number is "123-4321".

Programming Manual References

PC Programming Manual

2.7.14 [1-1] Slot—BRI Port—Network Numbering Plan—Trunk Property (for CO port)

2.7.16 [1-1] Slot—PRI Port (KX-TDA100/KX-TDA200/KX-TDA600 only)—Network Numbering Plan—Trunk Property (for CO port)

2.14.2 [8-2] Leading Number—Leading Number

2.15.1 [9-1] TIE Table

→ Leading Number

→ Removed Number of Digits

→ Added Number

PT Programming Manual

None

Feature Guide References

1.30.1 TIE Line Service

1.30.4 QSIG Standard Features

1.30.4.1 QSIG Standard Features—SUMMARY

Description

QSIG is a protocol which is based on ISDN (Q.931) and offers enhanced PBX features in a private network. The QSIG network supports private communications by the TIE line service method.

The following features are available for an ISDN-QSIG or VoIP private network. For ISDN, system programming is required to specify whether each feature (excluding Calling Line Identification Presentation [CLIP]) is available for each port of the private network.

[Service Table]

Service	Description & Reference
Calling Line Identification Presentation (CLIP)	Sends the caller's number to the QSIG network when making a call. → 1.30.4.2 Calling/Connected Line Identification Presentation (CLIP/COLP) and Calling/Connected Name Identification Presentation (CNIP/CONP)—by QSIG
Connected Line Identification Presentation (COLP)	Sends the number of the answered party to the QSIG network when answering a call. → 1.30.4.2 Calling/Connected Line Identification Presentation (CLIP/COLP) and Calling/Connected Name Identification Presentation (CNIP/CONP)—by QSIG
Calling Line Identification Restriction (CLIR)	Prevents the caller's CLI being presented to the called party by the caller. → 1.30.4.2 Calling/Connected Line Identification Presentation (CLIP/COLP) and Calling/Connected Name Identification Presentation (CNIP/CONP)—by QSIG
Connected Line Identification Restriction (COLR)	Prevents COLP being sent by the answered party. → 1.30.4.2 Calling/Connected Line Identification Presentation (CLIP/COLP) and Calling/Connected Name Identification Presentation (CNIP/CONP)—by QSIG
Calling Name Identification Presentation (CNIP)	Sends the caller's name to the QSIG network when making a call. → 1.30.4.2 Calling/Connected Line Identification Presentation (CLIP/COLP) and Calling/Connected Name Identification Presentation (CNIP/CONP)—by QSIG

Service	Description & Reference
Connected Name Identification Presentation (CONP)	Sends the name of the answered party to the QSIG network when answering a call. → 1.30.4.2 Calling/Connected Line Identification Presentation (CLIP/COLP) and Calling/Connected Name Identification Presentation (CNIP/CONP)—by QSIG
Calling Name Identification Restriction (CNIR)	Prevents the caller's name being presented to the called party by the caller. → 1.30.4.2 Calling/Connected Line Identification Presentation (CLIP/COLP) and Calling/Connected Name Identification Presentation (CNIP/CONP)—by QSIG
Connected Name Identification Restriction (CONR)	Prevents CONP being sent by the answered party. → 1.30.4.2 Calling/Connected Line Identification Presentation (CLIP/COLP) and Calling/Connected Name Identification Presentation (CNIP/CONP)—by QSIG
Call Forwarding (CF)—by QSIG	Forwards a call to the QSIG network. → 1.30.4.3 Call Forwarding (CF)—by QSIG
Call Transfer (CT)—by QSIG	Transfers a call to the QSIG network. → 1.30.4.4 Call Transfer (CT)—by QSIG
Completion of Calls to Busy Subscriber (CCBS)—by QSIG	Receives callback ringing when a busy called party on the QSIG network becomes free. → 1.30.4.5 Completion of Calls to Busy Subscriber (CCBS)—by QSIG

Feature Guide References

1.21.1 Integrated Services Digital Network (ISDN)

1.30.1 TIE Line Service

1.30.4.2 Calling/Connected Line Identification Presentation (CLIP/COLP) and Calling/Connected Name Identification Presentation (CNIP/CONP)—by QSIG

Description

Calling Line/Name Identification Presentation (CLIP/CNIP):
The PBX can send a preprogrammed extension number and/or name to the QSIG network when an extension user makes a call. The called party can see the number and/or name on his telephone display before answering the call.

Connected Line/Name Identification Presentation (COLP/CONP):
The PBX sends a preprogrammed extension number and/or name to the QSIG network when the extension user answers an incoming call. The caller can see the number and/or name of the answering party on his telephone display when the call is answered.

[CLIP/CNIP Example]

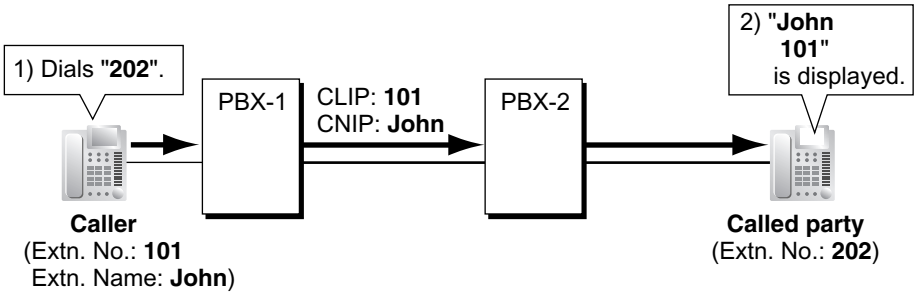

[COLP/CONP Example]

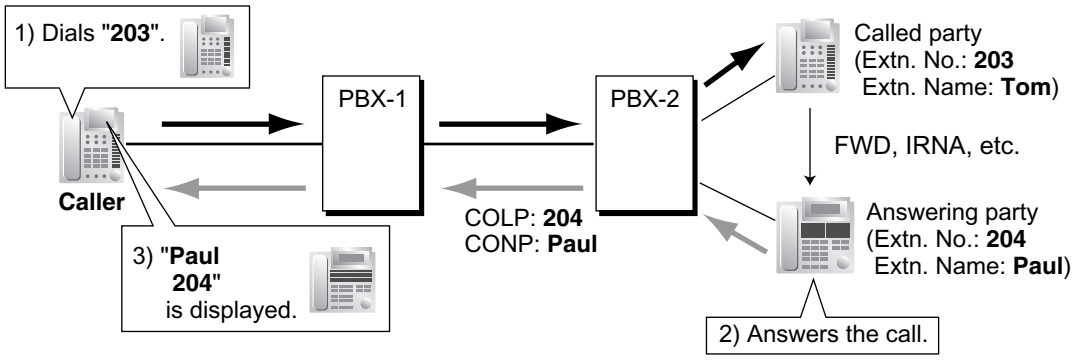

CLIP/COLP Number:
The extension number sent to the QSIG network for CLIP/COLP can be assigned for each extension through system programming.

CNIP/CONP Name:
The extension name sent to the QSIG network for CNIP/CONP can be assigned for each extension through system programming.

Calling/Connected Line Identification Restriction (CLIR/COLR):
It is possible for each extension to restrict the sending of its extension number to the QSIG network by pressing the CLIR button, COLR button, or entering the feature number.

Calling/Connected Name Identification Restriction (CNIR/CONR):
It is possible for each extension to restrict the sending of its extension name to the QSIG network. When CLIR is activated, CNIR becomes active automatically. When COLR is activated, CONR becomes active automatically.

Conditions

- These features comply with the following European Telecommunication Standard (ETS) specifications:
  – CLIP/COLP: ETS 300 172 Circuit mode basis services.
  – CNIP/CONP: ETS 300 238 Name identification supplementary services.
- **COLP/CLIR/COLR/CNIP/CONP/CNIR/CONR Assignment for Each Port**
  Each service can be enabled or disabled on each ISDN (QSIG) port of the PBX.
- **CLIR Button and COLR Button**
  It is possible to switch between CLIP and CLIR by pressing the CLIR button, and COLP and COLR by pressing the COLR button. A flexible button can be customised as the CLIR or COLR button.

Programming Manual References

PC Programming Manual

2.7.14 [1-1] Slot—BRI Port—Supplementary Service—COLP, CLIR, COLR, CNIP, CONP, CNIR, CONR, CF (Rerouting), CT, CCBS, AOC-D, AOC-E, 3PTY

2.7.16 [1-1] Slot—PRI Port (KX-TDA100/KX-TDA200/KX-TDA600 only)—Supplementary Service—COLP, CLIR, COLR, CNIP, CONP, CNIR, CONR, CF (Rerouting), CT, CCBS, AOC-D, AOC-E, 3PTY

2.8.8 [2-6-1] Numbering Plan—Main—Features
→COLR Set / Cancel
→CLIR Set / Cancel

2.10.1 [4-1-1] Wired Extension—Extension Settings—Main
→Extension Number
→Extension Name

2.10.10 [4-2-1] Portable Station—Extension Settings—Main
→Extension Number
→Extension Name

PT Programming Manual

[003] Extension Number

[004] Extension Name

Feature Guide References

1.20.2 Flexible Buttons

User Manual References

1.8.4 Displaying Your Telephone Number on the Called Party and Caller's Telephone (Calling/Connected Line Identification Presentation [CLIP/COLP])

1.8.5 Preventing Your Telephone Number Being Displayed on the Caller's Telephone (Connected Line Identification Restriction [COLR])

1.8.6 Preventing Your Number Being Displayed on the Called Party's Telephone (Calling Line Identification Restriction [CLIR])

1.30.4.3 Call Forwarding (CF)—by QSIG

Description

The PBX forwards the call to a destination extension in another PBX in QSIG network. The destination can be set on your own PBX on an extension basis as the forward destination of trunk calls (→ 1.3.1.2 Call Forwarding (FWD)).

If the same trunk group is used for the incoming call and the forwarded call, the following situation will be possible.

[Example]

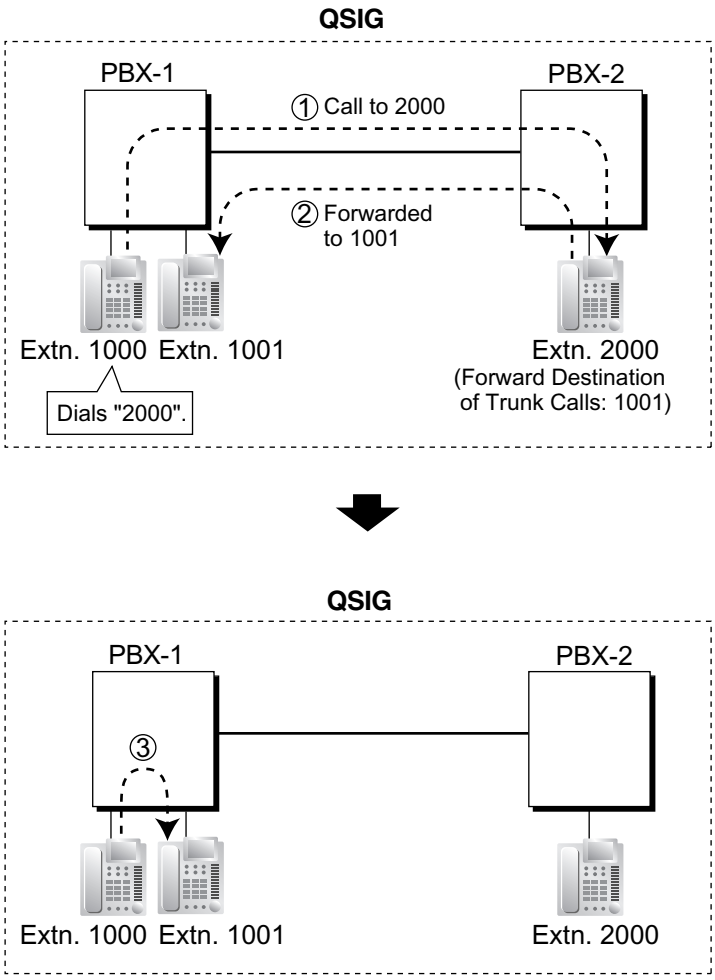

① Extension 1000 of PBX-1 dials extension number "2000", and the call is sent to extension "2000" of PBX-2 through QSIG network.

② The call is forwarded to the forward destination of trunk calls of extension 2000, which is extension "1001" of PBX-1.

③ The call between PBX-1 and PBX-2 is released, and the call is connected directly to the forward destination of extension 2000.

Conditions

- This feature complies with European Telecommunication Standard (ETS) specification ETS 300 257, Diversion supplementary services.
- This feature can be enabled or disabled on each ISDN (QSIG) port of the PBX.

Programming Manual References

PC Programming Manual

2.7.14 [1-1] Slot—BRI Port—Supplementary Service—COLP, CLIR, COLR, CNIP, CONP, CNIR, CONR, CF (Rerouting), CT, CCBS, AOC-D, AOC-E, 3PTY

2.7.16 [1-1] Slot—PRI Port (KX-TDA100/KX-TDA200/KX-TDA600 only)—Supplementary Service—COLP, CLIR, COLR, CNIP, CONP, CNIR, CONR, CF (Rerouting), CT, CCBS, AOC-D, AOC-E, 3PTY

PT Programming Manual

None

User Manual References

1.6.1 Forwarding Calls

1.30.4.4 Call Transfer (CT)—by QSIG

Description

The PBX transfers the call to a destination extension in another PBX in QSIG network.

If the same trunk group is used for the incoming call and the transferred call, the following situation will be possible.

[Example]

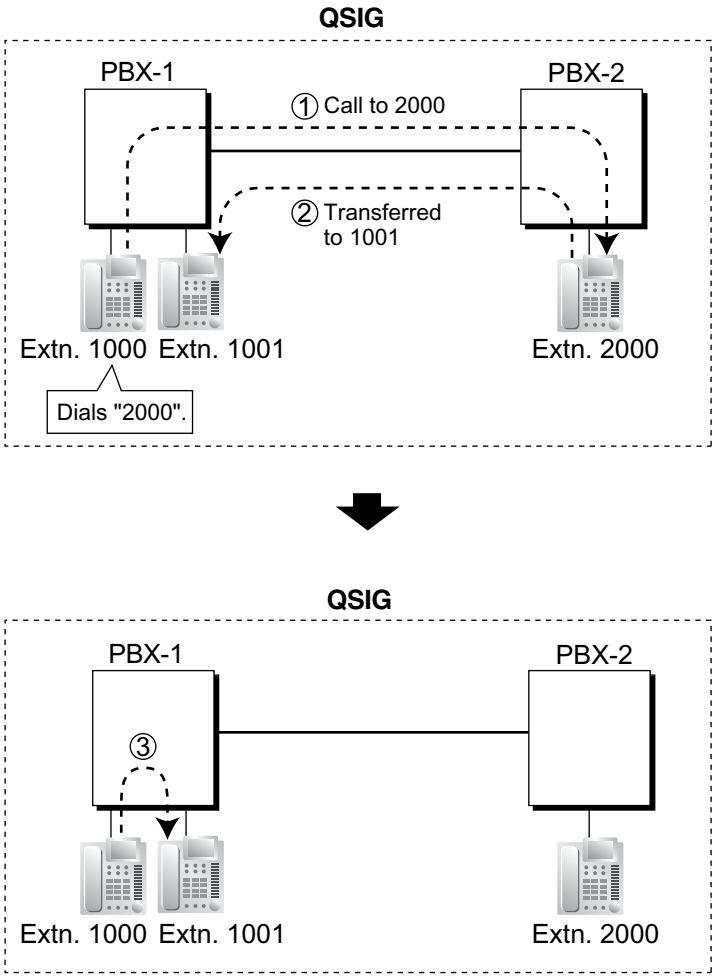

① Extension 1000 of PBX-1 dials extension number "2000", and the call is sent to extension "2000" of PBX-2 through QSIG network.

② The call is transferred from extension 2000 to extension "1001" of PBX-1.

③ The call between PBX-1 and PBX-2 is released, and the call is connected directly to the transfer destination of extension 2000.

Conditions

- This feature complies with European Telecommunication Standard (ETS) specification ETS 300 261, Call transfer supplementary service.
- This feature can be enabled or disabled on an ISDN (QSIG) port basis.
- Call Transfer with Announcement and Call Transfer without Announcement is possible (→ 1.12.1 Call Transfer).

Programming Manual References

PC Programming Manual

2.7.14 [1-1] Slot—BRI Port—Supplementary Service—COLP, CLIR, COLR, CNIP, CONP, CNIR, CONR, CF (Rerouting), CT, CCBS, AOC-D, AOC-E, 3PTY

2.7.16 [1-1] Slot—PRI Port (KX-TDA100/KX-TDA200/KX-TDA600 only)—Supplementary Service—COLP, CLIR, COLR, CNIP, CONP, CNIR, CONR, CF (Rerouting), CT, CCBS, AOC-D, AOC-E, 3PTY

PT Programming Manual

None

User Manual References

1.4.1 Transferring a Call (Call Transfer)

1.30.4.5 Completion of Calls to Busy Subscriber (CCBS)—by QSIG

Description

If the call has been made to an extension in another PBX in QSIG network and the called party is busy, an extension user can set to receive callback ringing when the called party becomes free. When the user answers the callback ringing, that party's number is automatically dialled.

Conditions

- This feature complies with European Telecommunication Standard (ETS) specification ETS 300 366, Call completion supplementary services.
- This feature is available under the following conditions:
  a) The caller's PBX is capable of using CCBS.
  b) The called party's PBX is capable of accepting CCBS.
- To receive and send CCBS, receiving and sending CCBS must be enabled individually on an ISDN (QSIG) port basis through system programming.
- An extension user can set only one CCBS. The last setting is effective.
- The CCBS setting is cancelled if there is no callback ringing within 60 minutes or callback ringing is not answered within 10 seconds.

Programming Manual References

PC Programming Manual

2.7.14 [1-1] Slot—BRI Port—Supplementary Service—COLP, CLIR, COLR, CNIP, CONP, CNIR, CONR, CF (Rerouting), CT, CCBS, AOC-D, AOC-E, 3PTY

2.7.16 [1-1] Slot—PRI Port (KX-TDA100/KX-TDA200/KX-TDA600 only)—Supplementary Service—COLP, CLIR, COLR, CNIP, CONP, CNIR, CONR, CF (Rerouting), CT, CCBS, AOC-D, AOC-E, 3PTY

PT Programming Manual

None

User Manual References

1.2.4 When the Dialled Line is Busy or There is No Answer

1.30.5 QSIG Enhanced Features

1.30.5.1 Network Direct Station Selection (NDSS)

Description

When PBXs are networked using ISDN or IP-GW cards, it is possible to assign flexible buttons as Network Direct Station Selection (NDSS) buttons. These buttons are used to monitor the status of extensions connected to up to seven other PBXs in the network, and to make or transfer calls to those extensions with one touch, like normal DSS buttons. This allows operator functions to be centralised even when there are offices in remote locations.

NDSS buttons show the status of the monitored extension as follows:

Light pattern	Status
Off	The monitored extension is idle.
Red on	The monitored extension is busy or has set DND for trunk calls.

[Example Network]

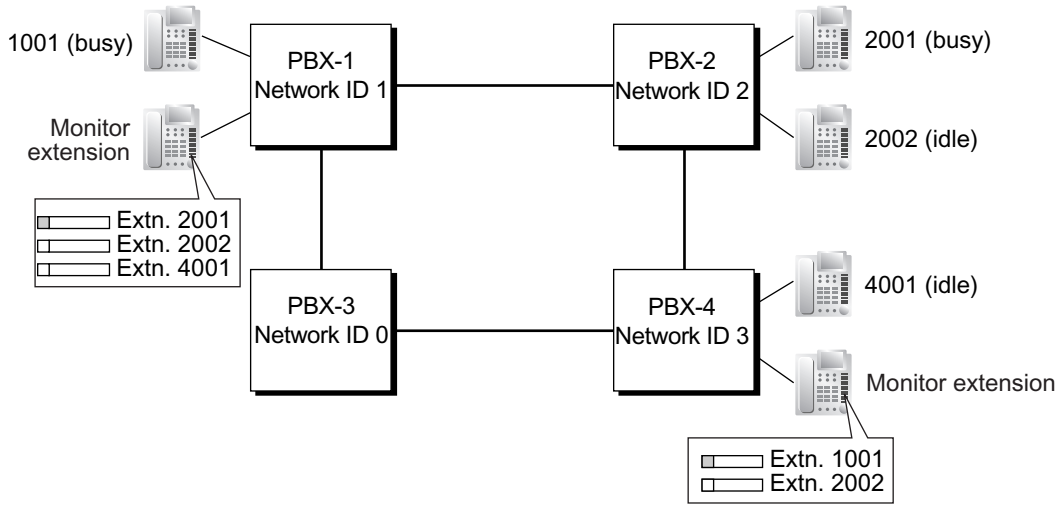

[Programming Procedure]

1. **Routing Table Assignment**
   TIE Line Routing and Modification tables must have been programmed in advance for all PBXs in the network, to allow calls to be made and transferred between PBXs (→ 1.30.1 TIE Line Service).
   In the programming example that follows, the PBXs in the network use the Extension Number method, as shown in the illustration above. However, the PBX Access Code method can also be used.
2. **Network PBX ID Assignment**
   Assign a Network PBX ID to each PBX in the network.
   → 2.15.2 [9-2] Network Data Transmission—Network BLF Data Transmission for Centralised Operator Feature—Network PBX ID
   - IDs 1-8: Can monitor extensions at other PBXs, and transmit monitor data about local extensions. Each ID number can be assigned to one PBX within the network.
   - ID 0: Retransmits monitor data throughout the network. This ID number can be assigned to multiple PBXs.

3. QSIG Port Setting [Monitored PBX]

ISDN-QSIG (PBX Direct Connection)
Each QSIG port of a BRI or PRI card that will be used to transmit extension status information must be set to do so through system programming. Even if a port is set to not transmit information, it will still receive information from other PBXs.
→ 2.7.14 [1-1] Slot—BRI Port—ISDN CO—Networking Data Transfer
→ 2.7.16 [1-1] Slot—PRI Port (KX-TDA100/KX-TDA200/KX-TDA600 only)—CO Setting—Networking Data Transfer

Transmit	Extension Status Information Functions
Enabled	• Transmit information on own PBX extensions • Receive information from other PBXs; forward it to other QSIG ports of the PBX • Re-transmit information received by other QSIG ports of the PBX
Disabled	• Receive information from other PBXs; forward it to other QSIG ports of the PBX

Set the transmission setting for each port according to the layout of your network, so that extension status information can travel between NDSS monitor PBXs.

[Example ISDN Network Port Setting]

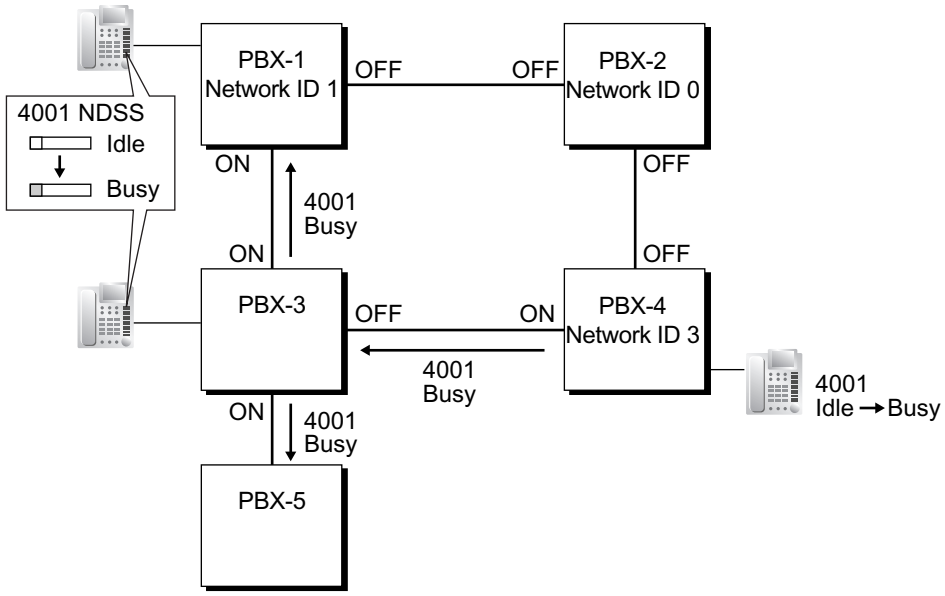

IP-GW-QSIG
IP data is routed through the network according to the routing tables of the IP-GW cards. When using VoIP, it is necessary to identify the monitor PBXs, to which to transmit extension status information, for each card that will be used. This is done by specifying the extension number of any extension (for example, the PBX operator) at the monitor PBX as a Network Operator extension for that IP-GW card.

[Example VoIP Network]

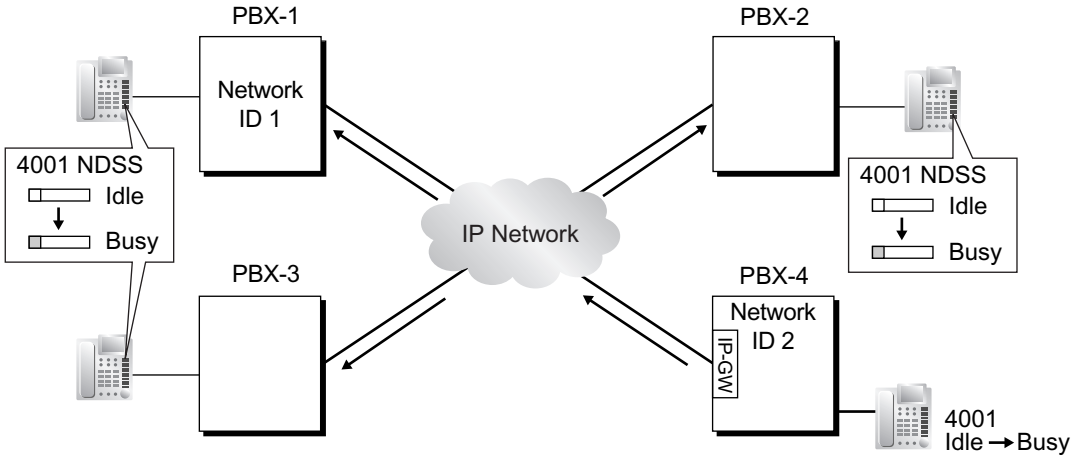

Mixed Network

When using the NDSS feature over a mixed network containing both VoIP portions and ISDN line portions, it is possible to set whether status information will be transferred between VoIP and ISDN cards within each PBX. For example, if the monitor PBX is on a VoIP network, and monitored PBXs are on an ISDN network, the PBX that acts as a gateway between the VoIP and ISDN networks must have this setting enabled for ISDN to VoIP.

4. **Network Monitor Extension Registration [Monitor PBX]**

Register the extensions (attached to other PBXs) that will be monitored. A maximum of 250 extensions can be registered. Only extensions that have been registered here can be assigned to NDSS buttons. → 2.15.4 [9-4] NDSS Key Table—Network Extension No.

Network Monitor Extensions Table

Index No.	Network Extn. No.	Network Extn. Name
001	2001	Branch 1: T. Durden
002	2002	Branch 1: M. Singer
003	4001	Branch 2: R. Paulson
:	:	:
250		

When using the PBX Access Code numbering method, the relevant access code must be added before the extension number registered here.

5. **NDSS Button Customisation [Monitor PBX]**

At any extension attached to a monitor PBX, customise a flexible button as an NDSS button for an extension registered above. Then go off-hook, press this button once, and go on-hook again. This activates the monitoring function. The monitored PBX will begin to transmit information about the status of that extension, and the monitor PBX will begin to receive the information. The button light will display the status of the extension connected to another PBX.

Removing or Editing a Registered Extension [Monitor PBX]

To monitor a new extension when 250 extensions are already being monitored, it is necessary to remove the registration of an existing extension.

The NDSS Monitor Release feature is used to stop monitoring a certain extension. When this feature is performed at a monitor PBX:

- If no other PBXs are monitoring the selected extension, the monitored PBX stops transmitting status information for that extension.

- The monitor PBX stops receiving status information for the selected extension. All NDSS buttons for that extension stop displaying status information.

However, the related information is not deleted from the Network Monitor Extensions Table. Therefore, if an extension user at a monitor PBX subsequently goes off-hook and presses the NDSS button for that extension, monitoring will be reactivated. To completely remove monitoring of an extension, the registration data must also be deleted from the Network Monitor Extensions Table at each monitor PBX.

The monitor destination of each NDSS button is determined by the registration information for a particular index number in this table. Therefore, if the registration information for an index number is changed (for example, the Network Extension Number assigned to Index No. 001 in the example above is changed from "2001" to "4002"), any NDSS buttons that have been set for that extension will automatically point to the new monitor destination.

Conditions

- **Hardware Requirements:**
  The PLMPR/PMPR/PSMPR software file version of all PBXs in the network must be 2.0xxx or later. The KX-TDA6920, KX-TDA0920, or KX-TDA3920 SD Memory Card for Software Upgrade to Enhanced Version must be installed in all PBXs that will monitor extensions or have extensions monitored. (PBXs with Network ID 0 can use the standard KX-TDA0820 or KX-TDA3820 SD Memory Card for Software Upgrade.)
  If using an IP-GW4E card (KX-TDA0484), the firmware (not LPR) of the card must be version 1.2 or later. If using a PRI23 card (KX-TDA0290), the LPR software of the card must be version 1.009 or later.
- Each of Network PBX IDs 1-8 can only be assigned to one PBX within a network. Assigning the same Network PBX ID to two PBXs will cause network data transmission problems.
- It is only possible to assign NDSS buttons for extensions that have been previously registered in the Network Monitor Extensions Table.
  2.10.5 [4-1-4] Wired Extension—Flexible Button
  → Type
  → Dial (for NDSS)
  2.10.13 [4-2-3] Portable Station—Flexible Button
  → Type
  → Dial (for NDSS)
  2.10.17 [4-3] DSS Console—Flexible Button
  → Type
  → Dial (for NDSS)
- Extensions connected to one PBX can monitor a maximum of 250 extensions at other PBXs. One extension can be monitored by multiple extensions at multiple PBXs.
- To reduce NDSS data traffic, it is recommended that 8 or less extensions in a single Incoming Call Distribution Group be monitored.
- Activation of an NDSS button is only required the first time that a button for a newly registered extension is created. Once an NDSS button has been activated by being pressed the first time, any further NDSS buttons for the same monitored extension will automatically display the extension status without needing to be activated.
- To use the NDSS Monitor Release feature, an extension must be assigned as a manager.
  → 2.8.11 [2-7-1] Class of Service—COS Settings—Extension Feature—Manager
  → [511] Manager Assignment
- A maximum of two ports of each BRI card can be assigned to transmit extension status information ("ON").
- Through system programming, it is possible to assign a maximum number of "hops" (transfers between PBXs) that extension status information can travel. Each time a piece of extension status information is forwarded to another PBX, its counter is increased by one. When this counter reaches the assigned maximum, the data is discarded. This is used to prevent data from circling unnecessarily around the

network.
→ 2.15.2 [9-2] Network Data Transmission—Network BLF Data Transmission for Centralised Operator Feature—Data Transmission Counter

- If it is not possible to remotely turn off transmission of extension status information using the NDSS Monitor Release feature because of network conditions, it is possible to perform the same operation directly through system programming at the monitored PBX.
  → 2.10.8 [4-1-6] Wired Extension—NDSS Link Data - Send
  → 2.10.15 [4-2-4] Portable Station—NDSS Link Data - Send
- When using a VoIP network, if extension status information is lost by the network, in some cases an NDSS button may not be able to display the status of the relevant extension.
- NDSS can not be used when two PBXs are networked using the **[TIE Call by Own PBX Extension Number]** feature (→ 1.30.1 TIE Line Service).

Programming Manual References

PC Programming Manual

2.7.14 [1-1] Slot—BRI Port—ISDN CO—Networking Data Transfer

2.7.16 [1-1] Slot—PRI Port (KX-TDA100/KX-TDA200/KX-TDA600 only)—CO Setting—Networking Data Transfer

2.8.11 [2-7-1] Class of Service—COS Settings—Extension Feature—Manager

2.10.5 [4-1-4] Wired Extension—Flexible Button

→ Type

→ Dial (for NDSS)

2.10.8 [4-1-6] Wired Extension—NDSS Link Data - Send

2.10.13 [4-2-3] Portable Station—Flexible Button

→ Type

→ Dial (for NDSS)

2.10.15 [4-2-4] Portable Station—NDSS Link Data - Send

2.10.17 [4-3] DSS Console—Flexible Button

→ Type

→ Dial (for NDSS)

2.15.2 [9-2] Network Data Transmission

2.15.3 [9-3] Network Operator (VoIP)

2.15.4 [9-4] NDSS Key Table

PT Programming Manual

[511] Manager Assignment

Feature Guide References

1.30.1 TIE Line Service

1.30.4 QSIG Standard Features

1.30.2 Voice over Internet Protocol (VoIP) Network

User Manual References

1.2.1 Basic Calling

2.1.7 Releasing Network Direct Station Selection (NDSS) Monitor

1.30.5.2 Centralised Voice Mail

Description

Up to 8 PBXs connected in a VoIP or ISDN private network can share the services of a VPS connected to another PBX in DPT integration. This VPS can provide voice mail for extensions attached to any of the PBXs in the network, as if the VPS were connected to the local PBX. In addition, the VPS can send Message Waiting notifications to extensions at any PBX, and users can access their mailboxes directly using the Message Waiting button.

The VPS features available at extensions in a network are shown below.

No.	Feature	Remote VPS	Local VPS
1	Automatic Configuration—Quick Setup	No	Yes
2	FWD to a Mailbox of the VPS	Yes	Yes
3	Intercept Routing to a Mailbox of the VPS	Yes	Yes
4	Transferring to a Mailbox of the VPS	No	Yes
5	Transfer Recall to a Mailbox of the VPS	No	Yes
6	Listening to a Recorded Message (Direct Mailbox Access)	Yes	Yes
7	VPS Trunk Service & Automatic Time Mode Notification for Incoming Call	Yes	Yes
8	Caller's Identification Notification to the VPS	Yes	Yes
9	DID Number Notification to the VPS	Yes	Yes
10	Status Notification to the VPS	Yes	Yes
11	Paging by the VPS	No	Yes
12	Live Call Screening (LCS)	No	Yes
13	Two-way Recording into the VPS	No	Yes
14	VPS Data Control by the PBX	No	Yes
15	Remote FWD Setting by the VM	No	Yes
16	VM LCD	No	Yes
17	Message clear on Check Out	No	Yes
18	Voice message number display	Yes	Yes

[Trunk Call Answered by the VPS, Transferred to Extension at Other PBX]

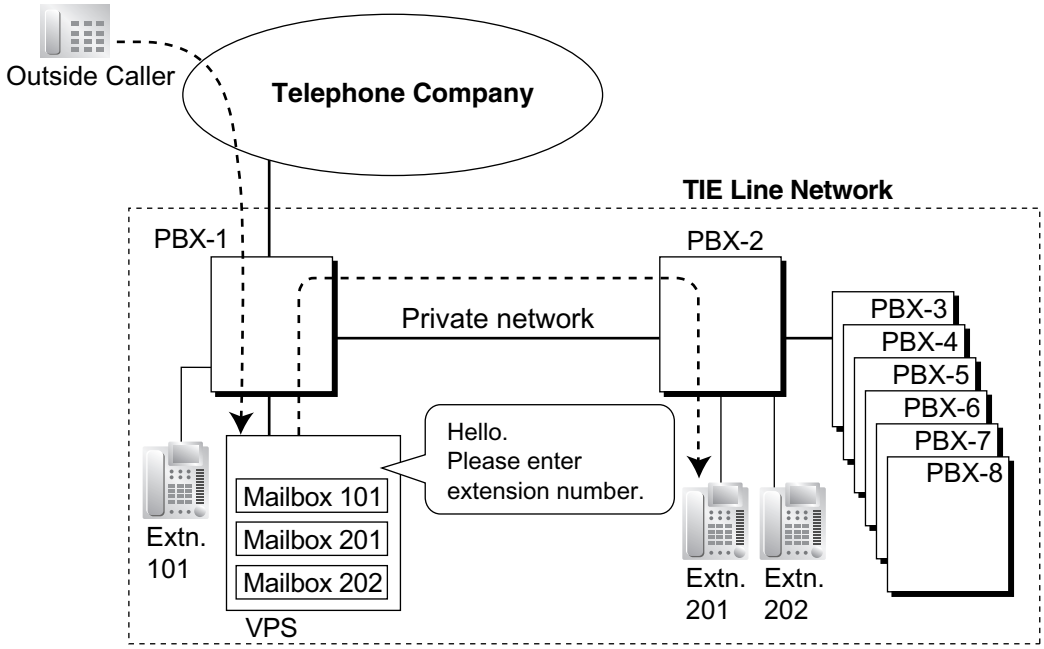

[Explanation]

An outside call is answered by the AA service of the VPS. The caller enters extension number 201, so the call is transferred over the private network to extension 201.

If extension 201 does not answer, mailbox 201 in the VPS will answer it and play the appropriate message.

[Trunk Call to an Extension Not Answered, Forwarded to Mailbox]

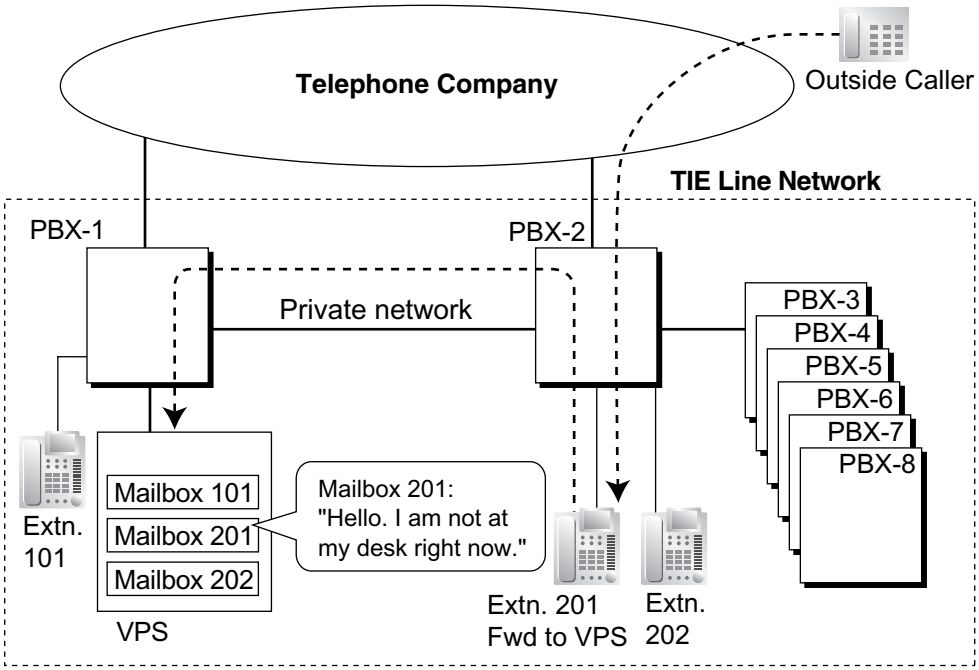

[Explanation]

Extension 201 does not answer the outside call, so the call is forwarded to the VPS, and answered by mailbox 201. If the outside caller leaves a message, the VPS sends a Message Waiting notification to the extension using Enhanced QSIG information over the private network.

When forwarding the call, PBX-2 sends any received call information (Caller ID number/name, DDI number)

along with the VM trunk group number to use, applicable time mode, and extension number and forwarding reason of the original destination extension to PBX-1 as Enhanced QSIG information.

Multiple VPSs

More than one PBX in the network can have a VPS connected, and each VPS can provide voice mail services for extensions connected to other PBXs in the network.

Conditions

- **Hardware Requirement**
  The KX-TDA6920, KX-TDA0920 or KX-TDA3920 SD Memory Card for Software Upgrade to Enhanced Version must be installed in the PBX connected to the VPS, and in all PBXs that will use this feature.
- All PBXs in the network must be TDA-series PBXs.
- Only KX-TVA/KX-TVM series VPSs connected using DPT integration support this feature.
- Only extension numbers of 4 digits or less, using the Extension Number Method, are supported. (→ 1.30.1 TIE Line Service)
- Mailboxes for extensions connected to other PBXs in the network must be set up manually.
- An extension can receive Message Waiting notifications from multiple VPSs connected to PBXs in the network. When multiple notifications of the number of unheard messages in an extension user's message box are sent from different VPSs, the most recent notification will be displayed.
- A flexible button cannot be customised as a Message Waiting button for another extension at a different PBX.
- Whether or not Enhanced QSIG information is transmitted can be set in the TIE table.
- When PBXs are connected by PRI23 cards, the card must be set to ISDN Standard mode. If set to T1 mode, the card must be removed and reinstalled to allow the mode to be changed. When the card is reinserted into the PBX, it is possible to choose whether the card will be set to T1 mode or ISDN Standard mode. The default is ISDN Standard.
- **Transfer to Mailbox**
  It is possible to transfer calls to a mailbox of a VPS at another PBX, by creating a flexible button containing the following:
  [T] + extension number of VPS at other PBX + [P] + [#] + 6
  Then, the extension user can transfer calls to a mailbox by pressing this key, entering the mailbox number, and going on hook.

Programming Manual References

PC Programming Manual

2.7.46 [1-3] Option—New Card Installation—ISDN Standard Mode for PRI23 Card (KX-TDA100/KX-TDA200/KX-TDA600 only)

2.15.1 [9-1] TIE Table—Centralised VM

2.15.2 [9-2] Network Data Transmission

2.17.1 [11-1] Main—Maintenance

→ Error Log for Centralised VM—Network MSW Transmission (Counter)

→ Error Log for Centralised VM—Network MSW Transmission (Buffer)

Feature Guide References

1.24.3 Voice Mail DPT (Digital) Integration

1.30.6 Network ICD Group

Description

An Incoming Call Distribution (ICD) Group can include up to 4 destinations at other PBXs in a private network, including the floating extension number of another ICD Group. This is done by assigning a virtual PS as a member of the ICD Group, and then setting the number of a destination at another PBX as the forwarding destination for that virtual PS. This allows multiple ICD groups at remote locations to receive calls together.

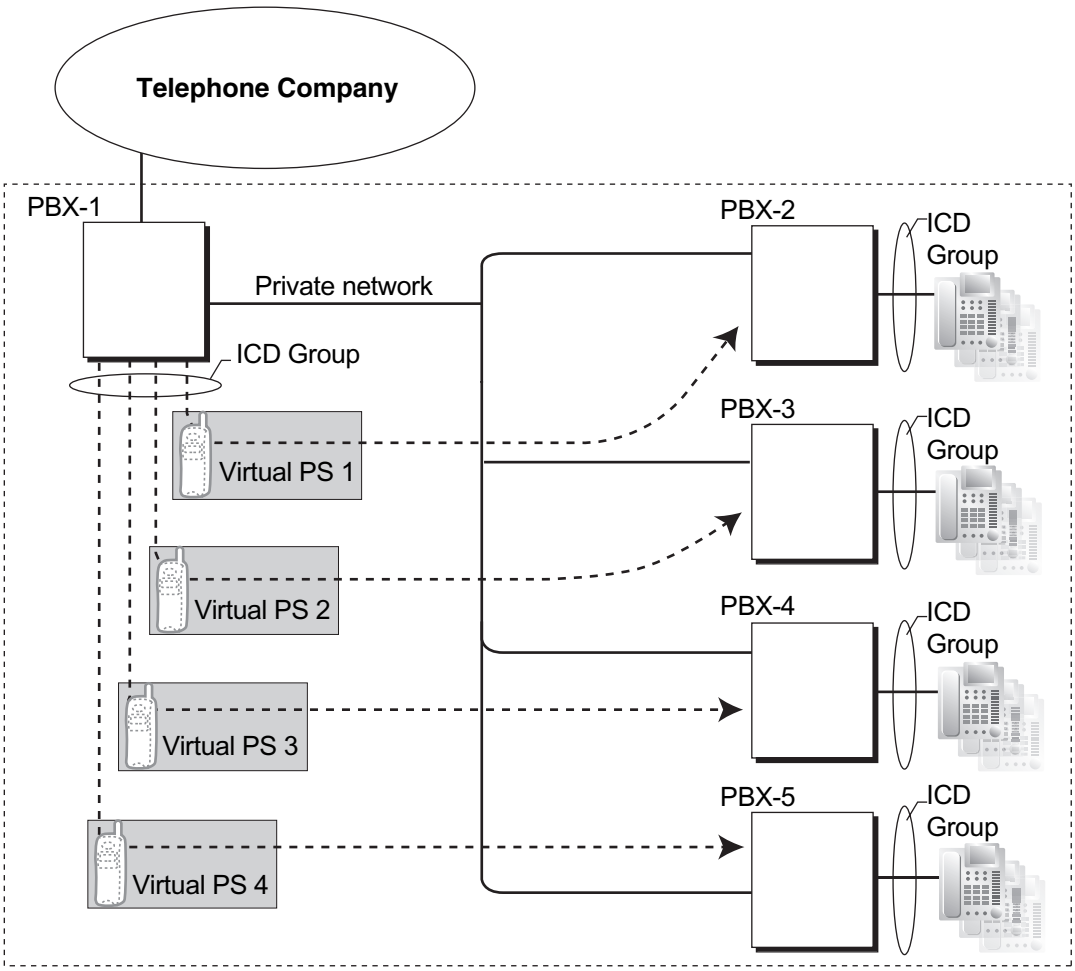

Conditions

- **Hardware Requirement**
  The KX-TDA6920, KX-TDA0920 or KX-TDA3920 SD Memory Card for Software Upgrade to Enhanced Version must be installed in the PBX that will support virtual PSs.
- The conditions for **1.2.2.3 Outside Destinations in Incoming Call Distribution Group** also apply to this feature.

Programming Manual References

PC Programming Manual

2.8.17 [2-9] System Options—Option 4—Send CLIP of CO Caller to ISDN—when ICD Group with Cellular Phone

PT Programming Manual

None

Feature Guide References

1.2.2.3 Outside Destinations in Incoming Call Distribution Group

1.25.6 Virtual PS

1.30.6.1 PS Roaming by Network ICD Group

Description

One PS can be registered to up to 4 PBXs in a private network, and a Network ICD group created for the PS at each PBX, with virtual PSs set to forward to the other PBXs in the network. When a call to the PS is received at one of the PBXs, the call rings simultaneously at all PBXs in the network to which that PS is registered.

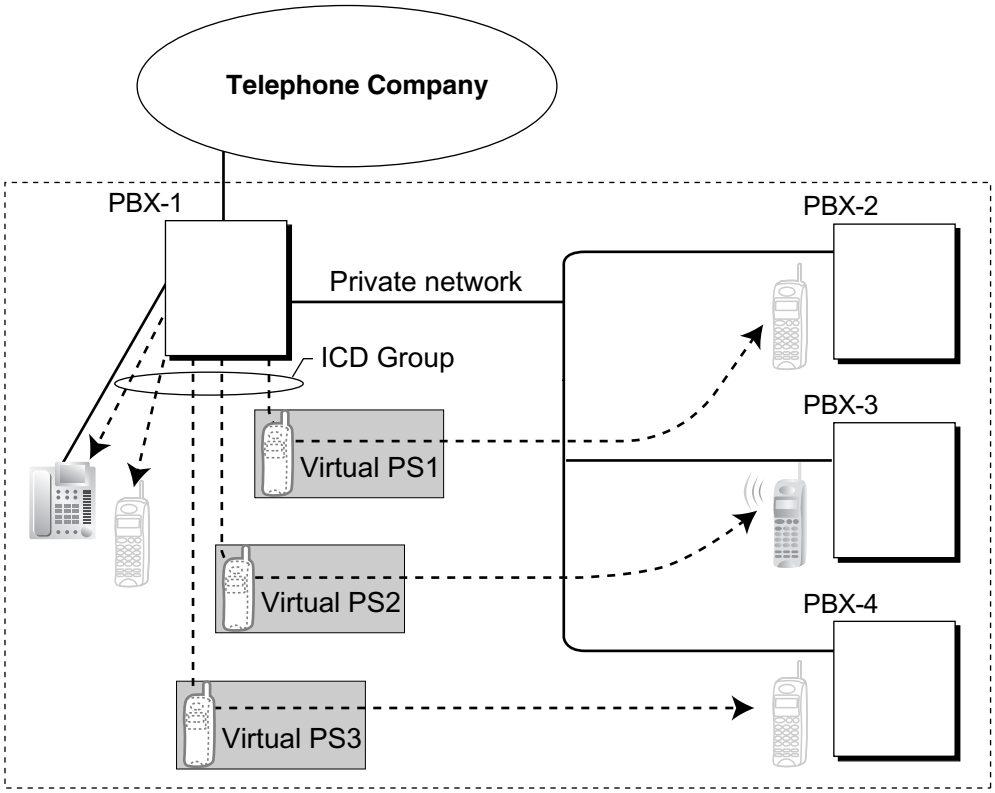

Each virtual PS is set to forward calls to the extension number of the actual PS as registered at one of the other PBXs.

Then, an Incoming Call Distribution (ICD) Group is created containing the registered PS and the virtual PSs.

When a call is received at one of the PBXs, it is forwarded to all of the other PBXs. One private network channel is used to forward an incoming call to one other PBX. Therefore, if a PS is registered at 3 other PBXs, 3 private network channels are needed to forward a single call to all of the PBXs.

Each PBX can store the current communication status of each PS (In Range or Out of Range). If the status of the PS is set to Out of Range when a call is received, the call will be refused and the private network channel will be released immediately. Since the PS can only be set to In Range at a single PBX at one time, any other PBXs to which the call is transferred will refuse the call, releasing the VoIP or ISDN channels.

Conditions

- **Hardware Requirement**
  The KX-TDA6920, KX-TDA0920 or KX-TDA3920 SD Memory Card for Software Upgrade to Enhanced Version
- If no signal is received from a PS for the preprogrammed length of time when an incoming call is received, the communication status of the PS is set to Out of Range, if enabled through system programming.

- When a PS comes within range of a certain PBX, Out of Range status is automatically released. However, in some negative wireless network conditions, Out of Range status may not be released automatically. In this case, the PS user can manually release Out of Range status by pressing the TALK button and confirming that a dial tone can be heard from the PBX.
- If the status of a PS is set to Out of Range at all PBXs that it is registered to, the call will be redirected to the overflow destination of the ICD Group.
- Handover from one PBX to another PBX during a conversation is not possible.

Programming Manual References

PC Programming Manual

2.8.4 [2-3] Timers & Counters—Miscellaneous—System Wireless—PS Out of Range Timer

2.8.17 [2-9] System Options—Option 4—System Wireless—Out of Range Registration

PT Programming Manual

None

Feature Guide References

1.2.2.3 Outside Destinations in Incoming Call Distribution Group

1.31 IP Proprietary Telephone (IP-PT) Features

1.31.1 IP Proprietary Telephone (IP-PT)

Description

This PBX supports the connection of IP proprietary telephones (IP-PTs), which function almost identically to normal PTs. However, they connect to the PBX over a Local Area Network (LAN), and send and receive calls using Internet Protocol (IP).
IP-PTs have two Ethernet ports for connection, primary and secondary. They are connected to the PBX through a network hub or other splitting device, and can have a PC connected to the secondary Ethernet port.
This feature is only available for the KX-TDA100, KX-TDA200, and KX-TDA600.

[Connection Example]

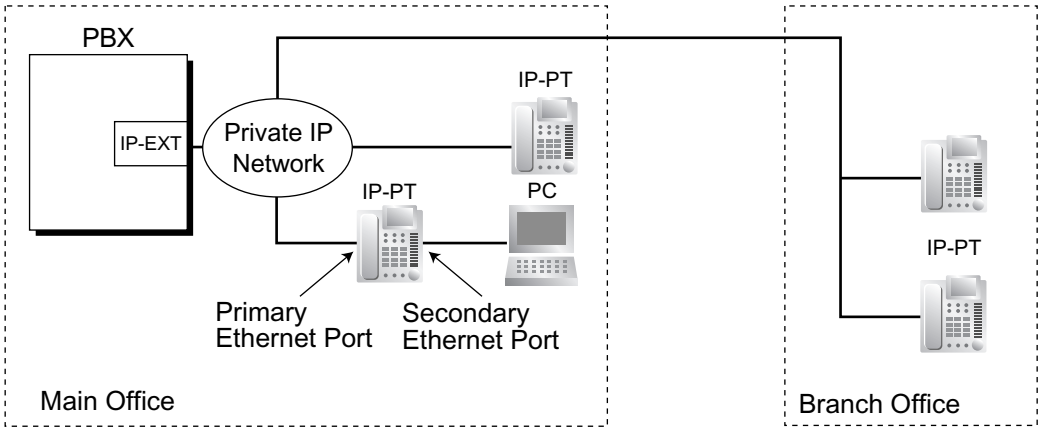

Conditions

- **Hardware Requirement:** An IP-EXT card
- IP-PT registration is required through system programming before an IP-PT can be used with the PBX. An IP-PT cannot be used unless an extension number is assigned. For details on how to register IP-PTs, see the Installation Manual.
- The following features cannot be used with an IP-PT:
  - XDP (→ 1.11.9 Parallelled Telephone)
  - Digital XDP (→ 1.11.9 Parallelled Telephone)
  - OHCA (→ 1.8.4.3 Off-hook Call Announcement (OHCA))
  - Walking Extension (→ 1.28.3 Walking Extension)
  - Using PC Phone or PC Console on a connected PC (→ 1.32.2 PC Phone/PC Console)
- The KX-NT265 does not have a secondary Ethernet port.

Installation Manual References

KX-TDA100/KX-TDA200

2.5.8 IP-EXT16 Card (KX-TDA0470)

KX-TDA600

2.7.8 IP-EXT16 Card (KX-TDA0470)

Programming Manual References

PC Programming Manual

2.7.36 [1-1] Slot—IP-Extension Card Property (KX-TDA100/KX-TDA200/KX-TDA600 only)

2.7.38 [1-1] Slot—IP-Extension Port (KX-TDA100/KX-TDA200/KX-TDA600 only)

2.8.21 [2-12] IP Extension Settings (KX-TDA100/KX-TDA200/KX-TDA600 only) (not available for MPR Software File Version 3.1000 or later)

PT Programming Manual

None

Feature Guide References

3.2 Exclusive Features Table

1.32 Computer Telephony Integration (CTI) Features

1.32.1 Computer Telephony Integration (CTI)

Description

Connecting a PC to a DPT, or connecting a CTI Server to this PBX, enables extension users to make use of advanced features by using the stored data in the PC or the CTI Server. The features that are available through CTI depend on the CTI application software used on connected PCs.

There are two types of CTI as follows:

1) First Party Call Control

2) Third Party Call Control

1. First Party Call Control

A PC is connected to a DPT using a USB port (USB Module) attached to the DPT. The PC monitors the status of the DPT and controls the DPT.

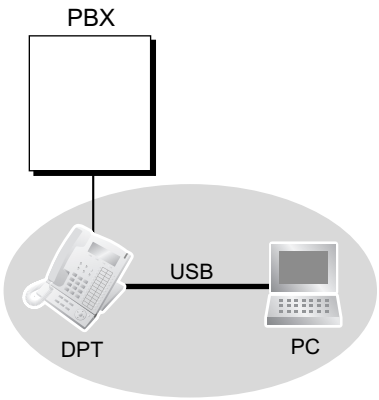

2. Third Party Call Control

A CTI Server is connected to the PBX using the USB port of the PBX or the LAN port of the CTI-LINK card as a CTI interface. PCs monitor the status of the PBX and control the PBX via the CTI Server. When a call is received, the CTI Server can be used to decide call routing, and to send information about the call to the destination extension user's PC. So, for example, if the call is from a customer, that customer's account information can be shown automatically on the screen of the PC at the same time as the call is received, depending on the CTI software used. In Third Party Call Control, the PC does not control extensions directly.

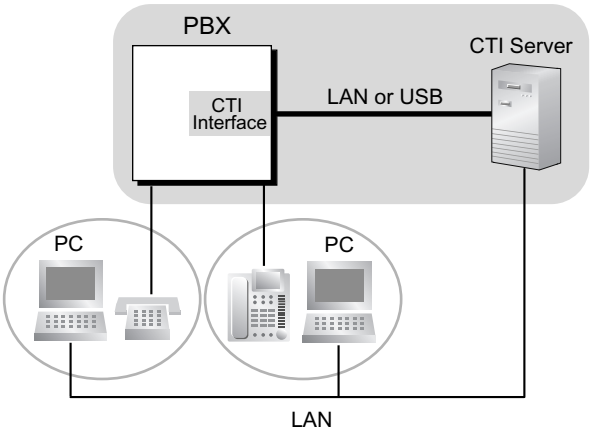

Conditions

[General]

- **Capable telephone:**
  DPT: KX-T7600 series PT, USB module
  IP-PT
- CTI application software must be installed on the connected PC. In addition, some features may require a KX-TDA6920, KX-TDA0920, or KX-TDA3920 SD Memory Card for Software Upgrade to Enhanced Version.

- **Application Programming Interface (API)/Protocol**
  The following interfaces are required for First Party Call Control and Third Party Call Control:

Type	API/Protocol
First Party Call Control	• TAPI 2.1
Third Party Call Control	• ECMA CSTA Phase 3 • TAPI 2.1

- The operating system of PC or CTI Server required for First Party Call Control or Third Party Call Control depends on your CTI application software. For details, refer to the manual for your CTI application software.
- For Third Party Call Control, it is possible to connect a CTI server to the Hybrid IP-PBX via either a CTI-LINK card or USB port. However, both connections cannot be used simultaneously.

[IP-PT Call Control]

- A PC connected directly to an IP-PT cannot be used for First Party Call Control.
- IP-PTs do not support the use of PC Phone or PC Console software on a connected PC.

Installation Manual References

KX-TDA30

2.6.4 First Party Call Control CTI Connection

2.10.1 Connection of Peripherals

KX-TDA100/KX-TDA200

2.3.1 MPR Card
2.6.7 CTI-LINK Card (KX-TDA0410)
2.7.4 First Party Call Control CTI Connection
2.11.1 Connection of Peripherals

KX-TDA600

2.3.1 EMPR Card
2.8.7 CTI-LINK Card (KX-TDA0410)
2.9.4 First Party Call Control CTI Connection
2.13.1 Connection of Peripherals

Programming Manual References

PC Programming Manual

2.7.42 [1-1] Slot—CTI-LINK Card Property (KX-TDA100/KX-TDA200/KX-TDA600 only)
2.8.8 [2-6-1] Numbering Plan—Main—Features—Dial Information (CTI)
2.8.17 [2-9] System Options—Option 6 (CTI)

PT Programming Manual

None

1.32.2 PC Phone/PC Console

Description

CTI First Party Call Control can be conducted by connecting a PC with a KX-T7633 or KX-T7636 DPT (equipped with USB module KX-T7601) through USB ports. By using the KX-TDA0350 PC Phone or KX-TDA0300 PC Console CTI application, users can enjoy many of the KX-TDA series PBX features while utilising the benefits of a CTI solution. PC Console gives users access to certain administrative level features that are not available with PC Phone.
The extensions that use PC Console must be assigned through system programming.
Along with many KX-TDA PBX features, PC Phone and PC Console offer many specific features, including the following:

- **Phone Book:**
  A list of telephone numbers including detailed information pertaining to each entry. This feature allows the user to make calls and send e-mails to each entry.
- **Outlook Integration:**
  The Microsoft® Outlook® Address Book can be integrated to be used with the PC Phone or PC Console.
- **Pop-up Screen:**
  An image containing information about the caller appears when a call is received.
- **Voice Memo:**
  Conversations are recorded at any time and can be saved, sent by e-mail, etc.
- **Text Memo:**
  A user can type a short message during a conversation which can be saved, sent by e-mail, etc.

[For PC Phone Only]

- **TAM (Telephone Answering Machine)**:
  If a call is not answered within a preprogrammed time, callers can leave a message after hearing a greeting message.
- **Message:**
  TAM messages are played back and/or automatically transferred by phone or by e-mail.

[For PC Console Only]

- **Incoming Group Screen:**
  Names, extension numbers, and the status (e.g., busy) of each extension can be monitored on a single screen. Calls can also be made and received on this screen.

Conditions

- **Hardware Requirements**: KX-T7633 or KX-T7636 DPT and USB Module KX-T7601
- **System Requirements:**
  - Microsoft Windows® 98 Second Edition, 2000, or XP (Windows Me is not supported)
  - Internet Explorer 5.0 or later

  Minimum Requirements:
  - CPU: Intel® Pentium® II 350 MHz
  - RAM: 64 MB
  - HDD: 100 MB available space (when installing)
  - Display: XGA (1024*768)
  - Peripheral Devices: Sound Board (for recording and replaying features), Speaker (for listening to voice messages), USB port, CD-ROM drive

Installation Manual References

KX-TDA30

2.6.4 First Party Call Control CTI Connection

KX-TDA100/KX-TDA200

2.7.4 First Party Call Control CTI Connection

KX-TDA600

2.9.4 First Party Call Control CTI Connection

Programming Manual References

PC Programming Manual

2.7.5 [1-1] Slot—Extension Port

→ DPT Type—Type (for DPT or S-Hybrid port)

→ DPT Type—Location No. (for DPT or S-Hybrid port)

PT Programming Manual

[601] Terminal Device Assignment

Feature Guide References

3.1 Capacity of System Resources

1.33 Cellular Phone Features

1.33.1 Cellular Phone Features—SUMMARY

Description

This PBX provides features to support the use of cellular phones and other outside destinations with the PBX. Calls can be forwarded from virtual PSs to outside destinations such as cellular phones, and then answered as if the user was at an extension within the PBX.

The following features can be used with cellular phones and other outside extensions:

Feature	Description & Reference
Outside Destinations in Incoming Call Distribution Group	Up to 4 cellular phones can be assigned as members of an Incoming Call Distribution (ICD) Group, and receive calls to the group. → 1.2.2.3 Outside Destinations in Incoming Call Distribution Group
Cellular Phone XDP Parallel Mode	A PT user can set up to 4 cellular phones to ring in parallel for incoming calls. → 1.2.2.3 Outside Destinations in Incoming Call Distribution Group
DISA Automatic Walking COS	Registered cellular phones are automatically recognised as PBX extensions when calling through DISA. → 1.17.6 Direct Inward System Access (DISA)
DISA Call Transfer From Outside Destination	A cellular phone user who answers a trunk call forwarded from the PBX using DISA can transfer that call to an extension within the PBX. → 1.17.6 Direct Inward System Access (DISA)

Conditions

- **Hardware Requirement**
  The KX-TDA6920, KX-TDA0920 or KX-TDA3920 SD Memory Card for Software Upgrade to Enhanced Version

Feature Guide References

1.25.6 Virtual PS

Section 2

System Configuration and Administration Features

2.1 System Configuration—Hardware

2.1.1 Extension Port Configuration

Description

There are three types of extension ports as follows:

a) **DPT Port:** DPT, DSS Console, Panasonic VPS (DPT [Digital] Integration), or PT-interface CS (e.g., KX-TDA0141) can be connected.

b) **SLT Port:** SLT or Panasonic VPS (DTMF Integration) can be connected.

c) **Super Hybrid Port:** DPT, APT, SLT, DSS Console, Panasonic VPS, or PT-interface CS can be connected.

EXtra Device Port (XDP) of Super Hybrid Ports:
A DPT and SLT can be connected to one Super Hybrid port (TR: SLT, HL: DPT). In this case, the SLT port (TR) of the Super Hybrid port can be used as an XDP port to connect an SLT as a sub telephone. There are two modes for the XDP port as follows:

Mode	Description
Parallel Mode	The DPT and SLT have the **same extension number** so that they can act as one extension. They use the main telephone's (DPT's) extension data (e.g., extension number, COS). (→ 1.11.9 Parallelled Telephone)
XDP Mode	The DPT and SLT have **different extension numbers** so that they can act as completely different extensions. To use XDP mode, XDP mode must be enabled (on) the port through system programming.

Conditions

- **Automatic Detection on Super Hybrid Port**
  A DPT, SLT, or PT-interface CS connected to a Super Hybrid port can be detected automatically without any programming. An APT connected to a Super Hybrid port can be detected automatically when the XDP mode has been disabled.
- A DSS Console or a Panasonic VPS (DPT [Digital] Integration) can also be connected with an SLT in XDP mode.
- **APT and SLT in Parallel Mode**
  An APT and an SLT can also be connected to a Super Hybrid port and used in parallel mode.
- **Digital XDP**
  A DPT can be connected to another DPT and act as a completely different extension. (→ 1.11.9 Parallelled Telephone)
- **Wireless XDP Parallel Mode**
  A PS can be used in parallel mode with a wired telephone.
  (→ 1.25.5 Wireless XDP Parallel Mode)
- **DSS Console and Paired Telephone Assignment**
  When a DSS Console is connected, a paired extension must be assigned through system programming. Only a PT can be a paired extension.

Programming Manual References

PC Programming Manual

2.7.5 [1-1] Slot—Extension Port

2.10.17 [4-3] DSS Console—Flexible Button—Pair Extension

PT Programming Manual

[007] DSS Console Paired Telephone

[600] EXtra Device Port (XDP) Mode

2.2 System Configuration—Software

2.2.1 Class of Service (COS)

Description

Each extension must belong to a Class of Service (COS). By assigning certain extensions to a COS, it is possible to control the behaviour and privileges of extension users (allowing or denying certain extensions access to various features, extensions, and trunks) depending on the duties appointed to them.
Many extensions can belong to the same COS by assigning each extension the same COS number, allowing the same restrictions and privileges to apply to a group of extensions.
The following features are controlled on a COS basis:

a) → 1.1.2.2 Internal Call Block
b) → 1.3.1.2 Call Forwarding (FWD)
c) → 1.3.1.3 Do Not Disturb (DND)—DND Override
d) → 1.4.1.3 Call Pickup
e) → 1.5.4.3 Account Code Entry
f) → 1.5.5.3 Trunk Access
g) → 1.8.2 Executive Busy Override
h) → 1.8.3 Call Monitor
i) → 1.8.4.3 Off-hook Call Announcement (OHCA)
j) → 1.8.4.4 Whisper OHCA
k) → 1.9.1 Toll Restriction (TRS)/Call Barring (Barring)
l) → 1.9.3 Extension Dial Lock
m) → 1.9.5 Walking COS
n) → 1.11.8 Trunk Call Limitation
o) → 1.12.1 Call Transfer
p) → 1.17.2 Door Open
q) → 1.17.6 Direct Inward System Access (DISA)
r) → 1.21.1.4 Call Forwarding (CF)—by ISDN (P-MP)
s) → 1.25.5 Wireless XDP Parallel Mode
t) → 1.26.1 Station Message Detail Recording (SMDR)—SMDR for Outgoing Trunk Calls
u) → 2.2.4 Time Service—Time Service Switching
v) → 2.2.6 Manager Features
w) → 2.3.2 PT Programming
x) → 1.7.1 Primary Directory Number (PDN)/Secondary Directory Number (SDN) Extension—SDN Key mode, SDN Walking COS, and assigning SDN buttons through PT programming

Conditions

- **Walking COS**
  Extension users can temporarily use their own COS at another extension with a less-privileged COS to access features, extensions, or trunks that are normally inaccessible due to that extension's COS.

Programming Manual References

PC Programming Manual

2.8.11 [2-7-1] Class of Service—COS Settings

2.10.1 [4-1-1] Wired Extension—Extension Settings—Main—COS

2.10.10 [4-2-1] Portable Station—Extension Settings—Main—COS

PT Programming Manual

2.1.8 COS Programming

[602] Class of Service

Feature Guide References

3.1 Capacity of System Resources

User Manual References

1.2.7 Calling without Restrictions

2.2.2 Group

Description

This PBX supports various types of groups.

1. Trunk Group

Trunks can be grouped into a specified number of trunk groups (e.g., for each carrier, trunk type, etc.). Several settings can be assigned on a trunk group basis. All trunks belonging to a trunk group follow the assignment determined for that trunk group.
→ 2.9.1 [3-1-1] Trunk Group—TRG Settings
→ [402] LCOT/BRI Trunk Group Number

One trunk can belong to only one trunk group on a port or channel basis.

Port basis: ELCOT/LCOT/DID/E & M/ISDN-BRI/ISDN-PRI23/ISDN-PRI30

Channel basis: E1/T1

2. Extension User Group

The PBX supports extension user groups, each of which is used to compose the following groups:

a) Tenant (→ 2.2.3 Tenant Service)

b) Call Pickup Group (See below.)

c) Paging Group (See below.)

Every extension must belong to one extension user group, but cannot belong to more than one extension user group.
→ 2.9.4 [3-2] Extension User Group
→ [603] Extension User Group

Assignable Extensions: PT/SLT/PS/ISDN Extension/T1-OPX

[Example]

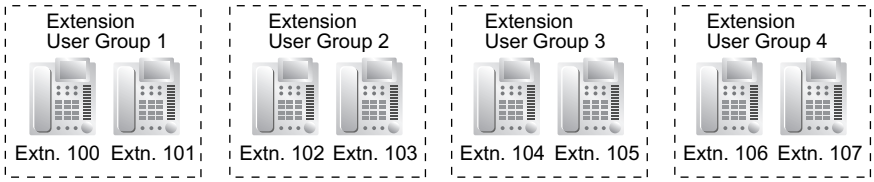

2.1 Call Pickup Group

Using the Group Call Pickup feature, extensions can answer any calls within a specified group. One extension user group can belong to several call pickup groups.(→ 1.4.1.3 Call Pickup)
→ 2.9.5 [3-3] Call Pickup Group
→ 2.9.6 [3-3] Call Pickup Group—All Setting
→ [650] Extension User Groups of a Pickup Group

[Example]

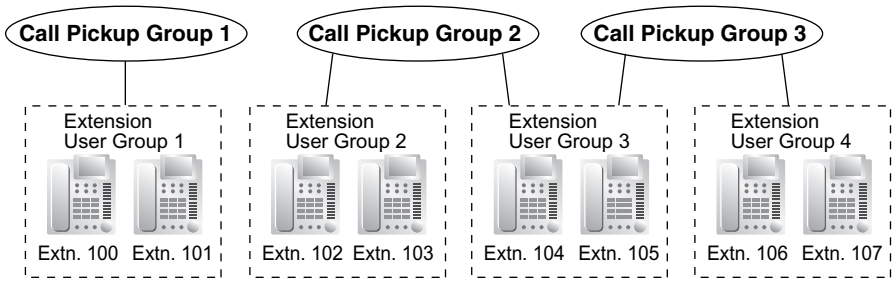

2.2 Paging Group

Using the Paging feature, extensions can make a page to any paging groups or answer a page to their own groups. One extension user group or external pager can belong to several paging groups. (→ 1.15.1 Paging)
→ 2.9.7 [3-4] Paging Group
→ 2.9.8 [3-4] Paging Group—All Setting
→ 2.9.9 [3-4] Paging Group—External Pager
→ [640] Extension User Groups of a Paging Group

[Example]

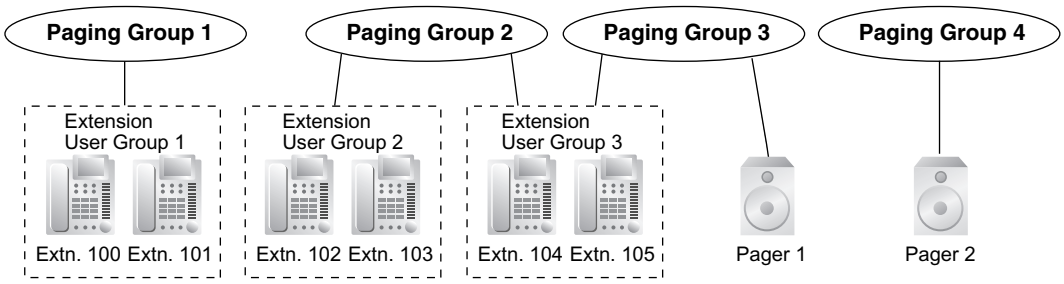

3. Idle Extension Hunting Group

If a called extension is busy or in DND mode, Idle Extension Hunting redirects the incoming call to an idle member of the same idle extension hunting group, which can be programmed through system programming. Idle extensions are automatically searched according to a preprogrammed hunting type: Circular Hunting or Terminated Hunting (→ 1.2.1 Idle Extension Hunting).
→ 2.9.14 [3-6] Extension Hunting Group
→ 2.9.15 [3-6] Extension Hunting Group—Member List
→ [680] Idle Extension Hunting Type
→ [681] Idle Extension Hunting Group Member

4. Incoming Call Distribution Group

An incoming call distribution group is a group of extensions which receives incoming calls directed to the group. Each incoming call distribution group has a floating extension number (default: 6 + two-digit group number) and name. One extension can belong to multiple groups.
→ 2.9.10 [3-5-1] Incoming Call Distribution Group—Group Settings
→ 2.9.13 [3-5-4] Incoming Call Distribution Group—Member
→ [623] Incoming Call Distribution Group Name

Assignable Extensions: PT/SLT/PS/ISDN Extension/T1-OPX/PS Ring Group
(→ 1.2.2 Incoming Call Distribution Group Features)

[Example]

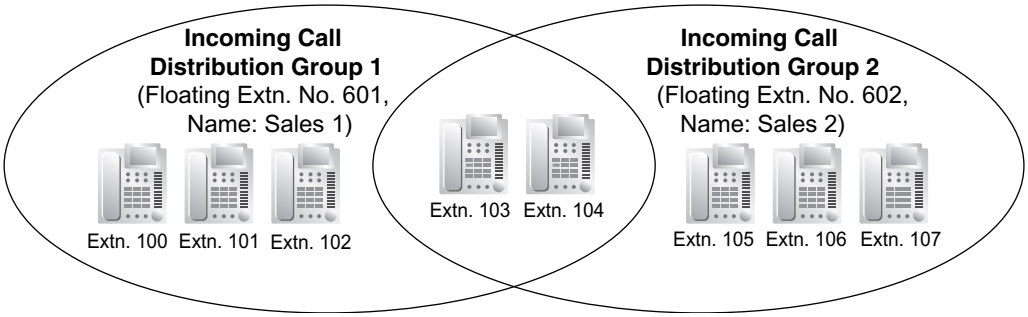

5. VM Group

There are two types of VM groups as follows:

Type	Description
VM (DTMF) Group	A group of SLT ports which use the Voice Mail DTMF Integration features. One SLT port can belong to only one group.
VM (DPT) Group	A group of DPT ports which use the Voice Mail DPT (Digital) Integration features. One DPT port can belong to only one group.

(→ 1.24.1 Voice Mail (VM) Group)
→ 2.9.16 [3-7-1] VM(DPT) Group—System Settings
→ 2.9.17 [3-7-2] VM(DPT) Group—Unit Settings
→ 2.9.19 [3-8-1] VM(DTMF) Group—System Settings
→ 2.9.20 [3-8-2] VM(DTMF) Group—Group Settings
→ 2.9.21 [3-8-2] VM(DTMF) Group—Group Settings—Member List
→ [660] VM Group Floating Extension Number

[Example]

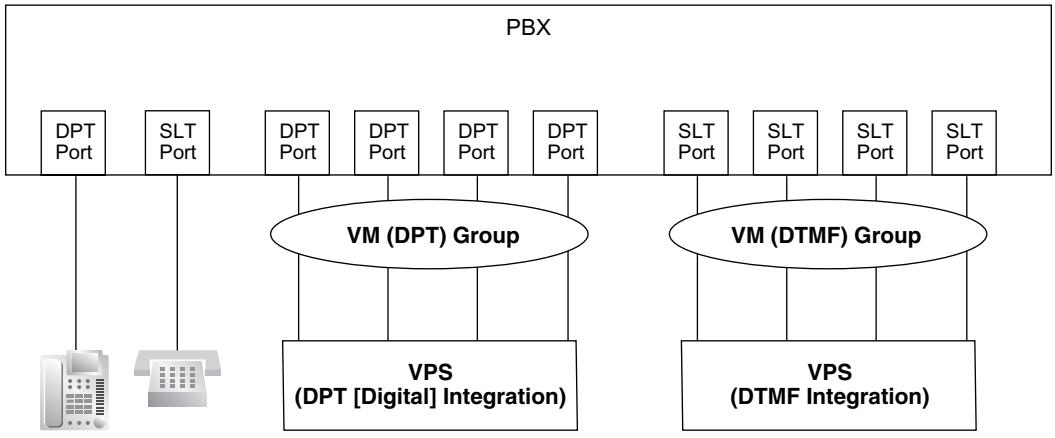

6. PS Ring Group

A PS ring group is a group of PS extensions that receives incoming calls directed to the group. Each group has a floating extension number and name through system programming. One PS can belong to multiple groups.
(→ 1.25.2 PS Ring Group)

→ 2.9.22 [3-9] PS Ring Group
→ 2.9.23 [3-9] PS Ring Group—Member List

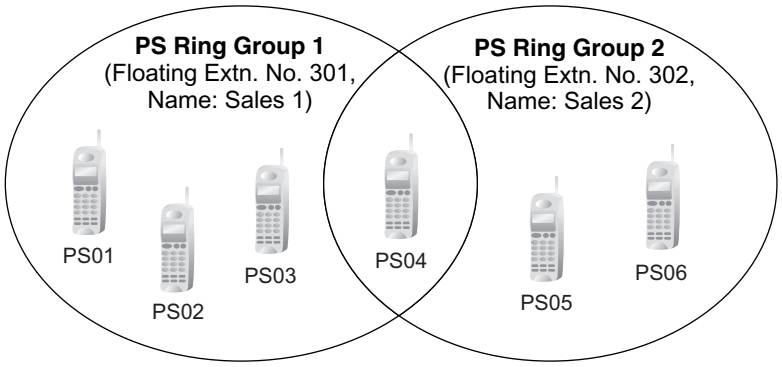

Programming Manual References

PC Programming Manual

2.9 [3] Group

PT Programming Manual

[402] LCOT/BRI Trunk Group Number
[603] Extension User Group
[620] Incoming Call Distribution Group Member
[622] Incoming Call Distribution Group Floating Extension Number
[623] Incoming Call Distribution Group Name
[640] Extension User Groups of a Paging Group
[650] Extension User Groups of a Pickup Group
[660] VM Group Floating Extension Number
[680] Idle Extension Hunting Type
[681] Idle Extension Hunting Group Member

Feature Guide References

3.1 Capacity of System Resources

2.2.3 Tenant Service

Description

This PBX can be shared with a certain number of tenants.

1. Tenant Configuration

1.1 Tenant Member

The tenant members consist of extension user groups. One extension user group can belong to only one tenant. Therefore, one extension can belong to only one tenant.
(→ 2.2.2 Group)

1.2 Time Service

Each tenant has a Time Table. The Start and/or End time of each time mode (day/lunch/break/night) can be set for each day of the week. The Time Table numbers correspond to the tenant numbers respectively.
(→ 2.2.4 Time Service)

[Example]

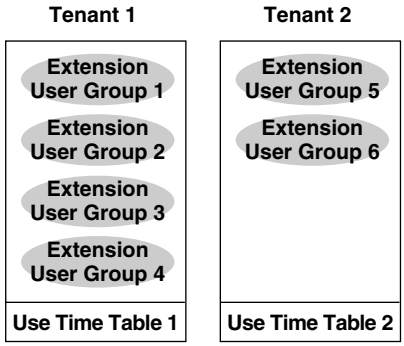

2. System Management

Each of the following system management items can be assigned to each tenant.

a) Tenant Operator (extension number/floating extension number of incoming call distribution group/none) (→ 2.2.5 Operator Features)
→ 2.12.6 [6-6] Tenant—Operator (Extension Number)

b) ARS Mode (Off/Local Access/All Access/System) (→ 1.10.1 Automatic Route Selection (ARS))
→ 2.12.6 [6-6] Tenant—ARS Mode

c) Music Source for Music on Hold (System/BGM Number/Cyclic Tone)
(→ 1.13.4 Music on Hold)
→ 2.12.6 [6-6] Tenant—Music On Hold

d) System Speed Dialling (System/Extended for KX-TDA30 or System/Tenant Exclusive for KX-TDA100/KX-TDA200/KX-TDA600)
(→ 1.6.1.5 Speed Dialling—Personal/System)
→ 2.12.6 [6-6] Tenant—System Speed Dial
Hardware Requirement: An EMEC or MEC card

[Programming Example]

Tenant No.	Operator	ARS Mode	Music Source	System Speed Dialling
1	Extn.101	Local Access	System*3	System*4
2	None*1	System*2	Cyclic Tone	Extended/ Tenant Exclusive
3	Floating extn. no. 200	Off	BGM1	Extended/ Tenant Exclusive
:	:	:	:	:

*1: Follows the system assignment of a PBX operator.
→ 2.8.3 [2-2] Operator & BGM—PBX Operator—Day, Lunch, Break, Night
→ [006] Operator Assignment

*2: Follows the system assignment of the ARS mode.
→ 2.14 [8] ARS
→ [320] ARS Mode

*3: Follows the system assignment of the music source for the Music on Hold.
→ 2.8.3 [2-2] Operator & BGM—BGM and Music on Hold—Music on Hold
→ [711] Music on Hold

*4 Follows the system assignment for System Speed Dialling.
→ 2.12.1 [6-1] System Speed Dial
→ [001] System Speed Dialling Number

Conditions

- **Tenant-to-Tenant Call Block**
  The following features can be restricted based on the COS for each extension (not based on the tenant) by the Internal Call Block feature (→ 1.1.2.2 Internal Call Block):
  – Calling extensions or doorphone(s) in the restricted tenant(s)
  – Picking up calls ringing in the restricted tenant(s)
  – Retrieving a call held within the restricted tenant(s).

[Example]

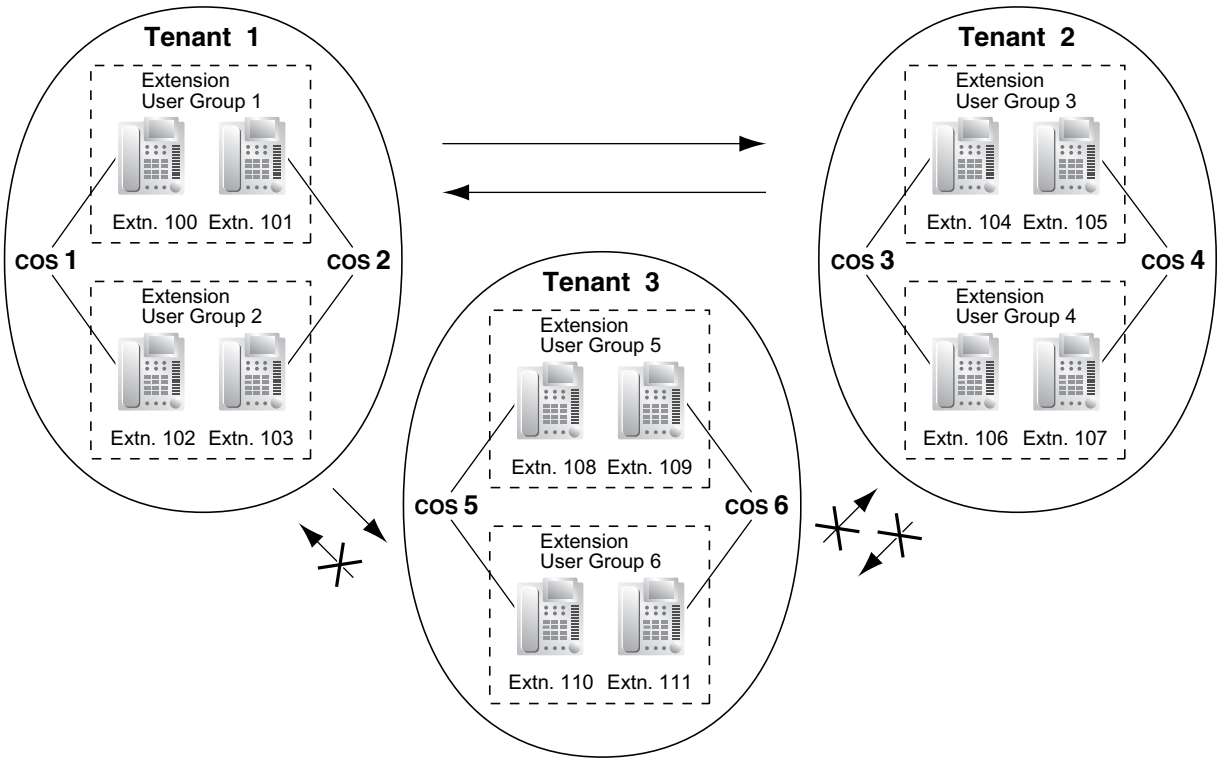
Tenant 1
Extension User Group 1
Extn. 100 Extn. 101
COS 1
COS 2
Extension User Group 2
Extn. 102 Extn. 103
Tenant 2
Extension User Group 3
Extn. 104 Extn. 105
COS 3
COS 4
Extension User Group 4
Extn. 106 Extn. 107
Tenant 3
Extension User Group 5
Extn. 108 Extn. 109
COS 5
COS 6
Extension User Group 6
Extn. 110 Extn. 111

[Programming Example]

Caller	Called Party						
	COS 1	COS 2	COS 3	COS 4	COS 5	COS 6	...
COS 1							...
COS 2							...
COS 3					✔	✔	...
COS 4					✔	✔	...
COS 5	✔	✔	✔	✔			...
COS 6	✔	✔	✔	✔			...
:	:	:	:	:	:	:	:

✔: Block

Explanation:

1. Assign each extension in a tenant to a certain COS number. Each tenant must have unique COS numbers.
   Tenant 1: COS 1 and COS 2
   Tenant 2: COS 3 and COS 4
   Tenant 3: COS 5 and COS 6
2. Tenant-to-Tenant Call Block enables by the Internal Call Block feature.
   a) Tenant 1 (COS 1 and COS 2) can make calls to both Tenant 2 (COS 3 and COS 4) and Tenant 3 (COS 5 and COS 6) as well as Tenant 1.
   b) Tenant 2 (COS 3 and COS 4) can make calls to Tenant 1 (COS 1 and COS 2) and Tenant 2.
   c) Tenant 3 (COS 5 and COS 6) can make calls to Tenant 3 itself only.

- An incoming call distribution group must belong to one tenant because the following features are determined on a tenant basis (→ 1.2.2.1 Incoming Call Distribution Group Features—SUMMARY):
  – Music on Hold while a call is waiting in the queue
  – The Time Table which determines the overflow destination.

Programming Manual References

PC Programming Manual

2.8.3 [2-2] Operator & BGM
→ PBX Operator—Day, Lunch, Break, Night
→ BGM and Music on Hold—Music on Hold
2.8.5 [2-4] Week Table
2.8.7 [2-5] Holiday Table
2.8.13 [2-7-3] Class of Service—Internal Call Block
2.9.4 [3-2] Extension User Group
2.9.10 [3-5-1] Incoming Call Distribution Group—Group Settings—Main—Tenant Number
2.10.1 [4-1-1] Wired Extension—Extension Settings—Main—User Group
2.10.10 [4-2-1] Portable Station—Extension Settings—Main—User Group

2.11.1 [5-1] Doorphone—Tenant Number
2.11.7 [5-5] External Sensor—Tenant No.
2.12.1 [6-1] System Speed Dial
2.12.6 [6-6] Tenant
2.14 [8] ARS
2.14.6 [8-5] Carrier—Authorisation Code for Tenant
2.16.2 [10-2] DIL Table & Port Settings—DIL—Tenant Number
2.16.3 [10-3] DDI / DID Table—Tenant Number
2.16.6 [10-4] MSN Table—Main—Tenant Number

PT Programming Manual

[001] System Speed Dialling Number
[006] Operator Assignment
[320] ARS Mode
[711] Music on Hold

Feature Guide References

3.1 Capacity of System Resources

2.2.4 Time Service

Description

This PBX supports day, night, lunch, and break modes of operation. TRS/Barring can be arranged separately. The destination of incoming calls can be set differently for each mode.

1. Time Service Switching Mode

Day/lunch/break/night mode can be switched either automatically or manually. The switching mode can be assigned for each tenant.
The switching mode can also be changed by pressing the Time Service Switching Mode (Automatic/Manual) button. This can be performed by only an extension assigned as the manager, or preprogrammed extension on a COS basis.

Type	Description
Automatic	The PBX will switch mode according to the preprogrammed Time Table.
Manual	A manager, or preprogrammed extension on a COS basis can switch mode by dialling the feature number or pressing the Time Service button.

Even while in the Automatic Switching mode, day/lunch/break/night mode can be changed manually.

2. Time Table

Each tenant has a Time Table used for the Automatic Switching mode. The Start and/or End time of each mode can be set for each day of the week. The Time Table numbers correspond to the tenant numbers respectively.

[Time Table Example]

Time Schedule		Time Table No. (Tenant No.)				
		1	2	3	4	…
MON	Day 1 start	08:00	11:00	08:00	08:00	…
	Lunch start	12:00	NONE	16:00	12:00	…
	Day 2 start	13:00	NONE	NONE	NONE	…
	Break 1 start	NONE	NONE	NONE	NONE	…
	Break 1 end (Day restart)	NONE	NONE	NONE	NONE	…
	Night start	16:00	20:00	12:00	NONE	…
TUE	Day 1 start	08:00	11:00	08:00	08:00	…
	Lunch start	12:05	NONE	13:00	13:00	…
	Day 2 start	13:00	NONE	NONE	NONE	…
	Break 1 start	NONE	NONE	NONE	NONE	…
	Break 1 end (Day restart)	NONE	NONE	NONE	NONE	…
	Night start	16:31	20:00	17:00	NONE	…
:	:	:	:	:	:	…

<Time Service Image of Monday>

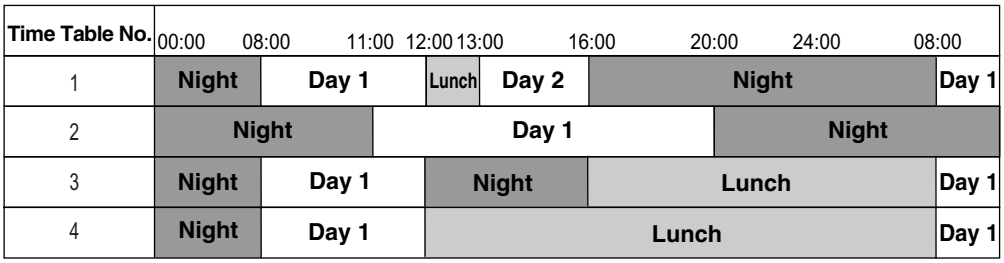

3. Features Using Time Service

The following features can be set in each time mode (day/lunch/break/night):

- **a)** Destination of incoming trunk calls (DIL/DID/DDI/MSN) (→ 1.1.1 Incoming Trunk Call Features)
- **b)** Destination of the Intercept Routing (→ 1.1.1.6 Intercept Routing)
- **c)** Queuing Time Table for incoming call distribution groups (→ 1.2.2.4 Queuing Feature)
- **d)** Overflow destination for incoming call distribution groups (→ 1.2.2.6 Overflow Feature)
- **e)** Destination of incoming doorphone calls (→ 1.17.1 Doorphone Call)
- **f)** PBX operator (→ 2.2.5 Operator Features)
- **g)** COS for TRS/Barring and for Trunk Access
- **h)** Outgoing Message (OGM) for Timed Reminder (→ 1.28.4 Timed Reminder)
- **i)** Intercept time for Intercept Routing—No Answer (→ 1.1.1.6 Intercept Routing) and for DISA Intercept Routing—No Answer (→ 1.17.6 Direct Inward System Access (DISA))

[Programming Examples of DID/DDI Table and DIL Table]
DID/DDI table can be programmed for each DID/DDI number, and a tenant (Time Table) number is assigned to each DID/DDI number. DIL table can be programmed for each trunk, and a tenant (Time Table) number is assigned to each trunk.

<DID/DDI Table>

Location	DID/DDI No.	Tenant (Time Table) No.	DID/DDI Destination			
			Day	Lunch	Break	Night
001	123-4567	1	105	100 (VPS)	105	100 (VPS)
002	123-2468	1	102	100 (VPS)	102	100 (VPS)
:	:	:	:	:	:	:

<DIL Table>

Trunk No.	Tenant (Time Table) No.	DIL Destination			
		Day	Lunch	Break	Night
01	1	101	100 (VPS)	101	100 (VPS)
02	2	102	100 (VPS)	102	100 (VPS)
:	:	:	:	:	:

Explanation:
If a trunk call with a DID number (123-4567) is received at 20:00;

1) Tenant (Time Table) number 1 will be used.
2) The call is received during night mode in Time Table 1.
3) The call will be routed to the extension 100 (VPS).

4. Holiday Mode

The holiday mode activates automatically using the Automatic Switching mode. Up to 24 holidays (start and end dates) can be stored, and one time mode can be selected for all holidays.

5. Time Service Button

A flexible button can be customised as the following buttons:

a) Day/Night button
b) Day/Night/Lunch button
c) Day/Night/Break button
d) Day/Night/Lunch/Break button

Each of these buttons is used for switching between modes. For example, pressing the Day/Night button switches between day and night modes. All of these buttons show the current status as follows:

Light Pattern	Status
Off	Day mode
Red on	Night mode
Green on	Lunch mode
Slow green flashing	Break mode

Light Pattern	Status
Slow red flashing	Holiday mode

Note

Any extension user (except extension users allowed to change the mode) can only check the current status on the display by pressing the Time Service button.

Conditions

- PT programming can set the Start and/or End time of the following:
  - Day-1 (Day Start time)
  - Lunch (Lunch Start time)
  - Day-2 (Lunch End time)
  - Night (Night Start time)

  PC programming can also set the following three time periods for break mode per day.
  - Break-1 Start
  - Break-1 End (Day restart)
  - Break-2 Start
  - Break-2 End (Day restart)
  - Break-3 Start
  - Break-3 End (Day restart)
- **Time Service Switching Mode (Automatic/Manual) Button**
  A flexible button can be customised as the Time Service Switching Mode (Automatic/Manual) button.

Programming Manual References

PC Programming Manual

2.8.5 [2-4] Week Table

2.8.7 [2-5] Holiday Table

2.8.8 [2-6-1] Numbering Plan—Main—Features—Time Service (Day / Lunch / Break / Night) Switch

2.8.11 [2-7-1] Class of Service—COS Settings—Extension Feature—Time Service Switch

2.10.5 [4-1-4] Wired Extension—Flexible Button

→ Type

→ Parameter Selection (for Time Service)

→ Parameter Selection (for Time Service - Automatic/Manual)

→ Optional Parameter (Ringing Tone Type Number) (for Time Service)

2.10.13 [4-2-3] Portable Station—Flexible Button

→ Type

→ Parameter Selection (for Time Service)

→ Parameter Selection (for Time Service - Automatic / Manual)

→ Optional Parameter (or Ringing Tone Type Number) (for Time Service)

2.10.17 [4-3] DSS Console—Flexible Button

→ Type

→ Parameter Selection (for Time Service)

→ Parameter Selection (for Time Service - Automatic/Manual)

→ Optional Parameter (Ringing Tone Type Number) (for Time Service)

PT Programming Manual

[101] Time Service Switching Mode

[102] Time Service Starting Time

[514] Time Service Manual Switching

Feature Guide References

1.9.1 Toll Restriction (TRS)/Call Barring (Barring)

1.20.2 Flexible Buttons

2.2.1 Class of Service (COS)

2.2.3 Tenant Service

3.1 Capacity of System Resources

User Manual References

1.8.10 Checking the Time Service Status

2.1.2 Time Service Mode Control

2.2.5 Operator Features

Description

Any extension or Incoming Call Distribution (ICD) group can be designated as an operator.
This PBX supports the following types of operators:

Type	Description
PBX operator	An extension or incoming call distribution group can be assigned as a PBX operator for each time mode (day/lunch/break/night).
Tenant operator	An extension or incoming call distribution group can be assigned as a tenant operator. The tenant operator may be the extension or incoming call distribution group of another tenant. **[Example]** Extension 110 in tenant 1 is the tenant operator of tenant 3.

Operator Call:
An extension user can call an operator by dialling the preprogrammed Operator Call feature number. The destination of the Operator Call depends on the following:

- If the Tenant Service is not in use:
  The call is directed to the PBX operator according to the corresponding time mode.
- If the Tenant Service is in use:
  The call is directed to the extension's tenant operator. If a tenant operator is not assigned, the call is directed to the PBX operator. In this case, the current time mode of the extension's tenant is used to determine the PBX operator that the call is directed to.

If neither a tenant operator nor a PBX operator is assigned, the caller will hear a reorder tone.

Conditions

- A single extension or incoming call distribution group can be assigned as both a tenant operator and the PBX operator.
- Tenant operators can be assigned individually for multiple tenants.

Programming Manual References

PC Programming Manual

2.8.3 [2-2] Operator & BGM—PBX Operator—Day, Lunch, Break, Night

2.12.6 [6-6] Tenant—Operator (Extension Number)

PT Programming Manual

[006] Operator Assignment

Feature Guide References

2.2.3 Tenant Service

3.1 Capacity of System Resources

User Manual References

1.2.1 Basic Calling

1.11.1 Using the Telephones in a Hotel-type Environment (Hospitality Features)

2.2.6 Manager Features

Description

An extension assigned as the manager (manager extension) is allowed to use the specified features. COS programming determines the extensions which can use the following manager features:

Feature		Description & Reference	Manager Password
Manager Programming	**Manager Password Change**	Changes the manager password.	Required
	Call Charge Management	Sets, displays, clears, and prints the call charge data. → 1.26.3 Call Charge Services	Required
	Verification Code Personal Identification Number (PIN) Set	Sets a verification code PIN for each verification code. → 1.9.6 Verification Code Entry	Required
	Remote PIN Clear	Clears the extension PIN of an extension remotely, and a verification code PIN. PIN Lock is also unlocked. → 1.28.1 Extension Personal Identification Number (PIN) → 1.9.6 Verification Code Entry	Required
	Remote Extension Dial Lock	Sets or cancels the Extension Dial Lock on an extension remotely. → 1.9.3 Extension Dial Lock	Required
Dial Tone Transfer		Changes the TRS/Barring level of the extension temporarily. **[Example]** An extension user can call a manager to release the restricted outgoing call (e.g., international call). → 1.9.4 Dial Tone Transfer	Not required
Outgoing Message (OGM)		Records and plays back outgoing messages (OGMs). → 1.17.5 Outgoing Message (OGM)	Not required
Time Service		Switches the time mode (day/lunch/break/night) manually. → 2.2.4 Time Service	Not required

Feature	Description & Reference	Manager Password
BGM—External	Sets the External BGM on and off. → 1.17.4 Background Music (BGM)	Not required
Trunk Busy Out Clear	Clears the Busy Out status of a trunk. → 1.5.4.6 Trunk Busy Out	Not required
NDSS Monitor Release	Removes the monitor function from an NDSS button. → 1.30.5.1 Network Direct Station Selection (NDSS)	Not required

Conditions

WARNING
There is a risk that fraudulent telephone calls will be made if a third party discovers a personal identification number (PIN) (verification code PIN or extension PIN) of the PBX.
The cost of such calls will be billed to the owner/renter of the PBX.
To protect the PBX from this kind of fraudulent use, we strongly recommend:

a) Keeping PINs secret.
b) Selecting complex, random PINs that cannot be easily guessed.
c) Changing PINs regularly.

- **Manager Password**
  One manager password can be assigned per PBX.

Programming Manual References

PC Programming

2.8.11 [2-7-1] Class of Service—COS Settings—Extension Feature—Manager

2.17.1 [11-1] Main—Password—Manager Password - PT Programming—Prog *1

PT Programming Manual

[112] Manager Password

[511] Manager Assignment

Feature Guide References

2.2.1 Class of Service (COS)

User Manual References

2.1 Control Features

3.2.2 Manager Programming

2.3 System Data Control

2.3.1 PC Programming

Description

This PBX can be programmed and administered using a PC. There are two programming methods:

1) **On-site Programming:** System programming/diagnosis can be performed locally by connecting a PC to the PBX directly.
2) **Remote Programming:** System programming/diagnosis and data upload can be performed from a remote location.

1. On-site Programming:

Method	Description
Using the Serial Interface (RS-232C) port	The PBX has a Serial Interface (RS-232C) port which can be used for either system administration or SMDR (→ 1.26.1 Station Message Detail Recording (SMDR)).
Using the USB port	The PC is connected to the USB port of the PBX, or a USB port (USB Module) attached to a DPT.
Using the LAN interface (KX-TDA100/KX-TDA200/KX-TDA600 only)	A CTI-LINK card must be installed.
Using a modem through an SLT port*	An RMT card must be installed. Assign the floating extension number of the analogue remote maintenance (default: 599), and dial this number from the PC to connect to the PBX.
Using an ISDN TA interface (64 kbps) through an ISDN Extension Line*	Assign the floating extension number of the ISDN remote maintenance (default: 699), and dial this number from the PC to connect to the PBX. The RMT card is not required for this method. This method is available only when a user-supplied ISDN TA that supports CAPI is used.

*: If remote access is disabled through system programming, then this on site programming cannot be done.

2. Remote Programming:

Method	Description
Using a modem (RMT card)	An RMT card must be installed. The floating extension number of the analogue remote maintenance must be assigned (default: 599). PC programming, using a telephone connected in parallel with the modem, can be done in the following ways: • **Direct Access** Dial the DIL/DID/DDI number whose destination is the floating extension number of the analogue remote maintenance. • **Through DISA** Dial the floating extension number of the analogue remote maintenance using the DISA feature. (→ 1.17.6 Direct Inward System Access (DISA)) • **Call Transfer** Call an extension (probably the operator), and request a transfer to the floating extension number of the analogue remote maintenance. (→ 1.12.1 Call Transfer)
Using an external modem (Not RMT card)	An external modem can be used instead of an RMT card to perform the remote programming. An external modem can be connected to the Serial Interface (RS-232C) of the PBX. Connect the modem to an extension port which is assigned as the DIL/DID/DDI/MSN destination or to a trunk directly to connect to the PBX from the PC. An AT command can be sent to the modem automatically when it is connected to the Serial Interface (RS-232C) port. AT commands can be programmed beforehand through system programming to initialise the modem. An AT command can also be sent manually in the PT system programming mode.
Using an ISDN TA interface (64 kbps) through an ISDN Trunk	The floating extension number of the ISDN remote maintenance must be assigned (default: 699), and dial the DIL/DID/DDI/MSN number whose destination is the floating extension number of the ISDN remote maintenance. The RMT card is not required for this method. This method is available only when an user-supplied ISDN TA that supports CAPI is used.

Conditions

- Only one system programming session can be in progress at a time, whether using a PC or a PT.
- **Programmer Code and Password for System Programming**
  To access system programming, a programmer code and its password must be entered. For more details, see Section 2.3.3 Password Security in this Feature Guide.
- **Remote Programming Limitation**
  It is possible to disable remote access through system programming.

Installation Manual References

KX-TDA30

2.5.8 RMT Card (KX-TDA3196)

3.1 Overview

3.2 Connection

3.3 Installation of the KX-TDA30 Maintenance Console

KX-TDA100/KX-TDA200

2.3.1 MPR Card

2.3.3 RMT Card (KX-TDA0196)

2.6.7 CTI-LINK Card (KX-TDA0410)

3.1 Overview

3.2 Connection

3.3 Installation of the KX-TDA Maintenance Console

KX-TDA600

2.3.1 EMPR Card

2.3.3 RMT Card (KX-TDA0196)

2.8.7 CTI-LINK Card (KX-TDA0410)

3.1 Overview

3.2 Connection

3.3 Installation of the KX-TDA600 Maintenance Console

Programming Manual References

PC Programming Manual

2.17.1 [11-1] Main

→Remote

→Password—System Password - PC Programming—User Level

→Password—System Password - PC Programming—Administrator Level

→Password—System Password - PC Programming—Installer Level

PT Programming Manual

[801] External Modem Control

[810] Remote Programming

[811] Modem Floating Extension Number

[812] ISDN Remote Floating Extension Number

Feature Guide References

1.1.1.2 Direct In Line (DIL)

1.1.1.3 Direct Inward Dialling (DID)/Direct Dialling In (DDI)

1.1.1.4 Multiple Subscriber Number (MSN) Ringing Service

2.3.2 PT Programming

Description

A PT user can perform the following programming:

a) **Personal Programming:** Customising the extension according to his needs.

b) **System Programming:** Customising the PBX according to organisational needs.

c) **Manager Programming:** Customising specified frequently changing items (e.g., Charge Management and Remote Extension Dial Lock).

Conditions

- COS programming determines what programming can be performed:
  - System programming and personal programming
  - Personal programming only
  - No programming
- The extension which is connected to the lowest numbered extension port can perform both personal programming and system programming regardless of the COS.
- The extension(s) assigned as the manager COS can perform manager programming.
- During programming, the PT is considered to be busy.
- Only one system programmer or one manager programmer is allowed to perform system or manager programming at one time. The maximum number of simultaneous programmers that each PBX supports is as follows:
  - one system programmer + 63 personal programmers
  - one manager programmer + 63 personal programmers
  - 64 personal programmers
- **System Programming Password Level**
  To access system programming, a valid password must be entered. For more details, see Section 2.3.3 Password Security in this Feature Guide.
- **Personal Programming Data Default Set**
  A user can return all of the items programmed on the telephone to default.

Programming Manual References

PC Programming Manual

2.8.11 [2-7-1] Class of Service—COS Settings—Extension Feature—Programming Mode Level

2.17.1 [11-1] Main—Password

→System Password - PT Programming—Prog ** : User Level

→System Password - PT Programming—Prog *# : Administrator Level

→Manager Password - PT Programming—Prog *1

PT Programming Manual

2.1 PT Programming

[516] Programming Mode Limitation

Feature Guide References

2.2.1 Class of Service (COS)

2.2.6 Manager Features
3.1 Capacity of System Resources

User Manual References

3.1 Customising Your Phone (Personal Programming)
3.2 Manager Programming
3.3 Customising Your System (System Programming)

2.3.3 Password Security

Description

To maintain system security, system passwords are required to access certain programming functions of the PBX. By giving different users access to different passwords, it is possible to control the amount of programming that each user is able to perform.
The following types of system passwords are available:

Password		Description	Format
PT	System Password (PT) for User	Used to access user-level PT programming. The specific PT programming items that may be programmed at user level can be selected through system programming item.	4 – 10 digits
	System Password (PT) for Administrator	Used to access administrator-level PT programming. All PT programming settings are available.	
PC	System Password (PC) for User	Used with the user-level programmer code to access user-level PC programming. The installer can specify which system programming settings are available.	4 – 10 characters
	System Password (PC) for Administrator	Used with the administrator-level programmer code to access administrator-level PC programming. The installer can specify which system programming settings are available.	
	System Password (PC) for Installer	Used with the installer-level programmer code to access installer-level PC programming. All system programming settings are available.	

The three programmer codes used for PC programming can be set through Maintenance Console 2.4.10 Tool—Programmer Code Change option. For more information about programmer codes, see Section 2.1.2 Access Levels in the PC Programming Manual. The required format of each code is as follows:

Item	Length
User Level Programmer Code	0 – 16 characters
Administrator Level Programmer Code	4 – 16 characters
Installer Level Programmer Code	4 – 16 characters

Warning to the Administrator or Installer regarding the system password

1. Please provide all system passwords to the customer.
2. To avoid unauthorised access and possible abuse of the PBX, keep the passwords secret, and inform the customer of the importance of the passwords, and the possible dangers if they become known to others.
3. The PBX has default passwords preset. For security, change these passwords the first time that you programme the PBX.
4. Change the passwords periodically.
5. It is strongly recommended that passwords of 10 numbers or characters be used for maximum protection against unauthorised access. For a list of numbers and characters that can be used in system passwords, refer to Section 1.1.2 Entering Characters in the PC Programming Manual.

6. If a system password is forgotten, it can be found by loading a backup of the system data into a PC, and checking the password using the Maintenance Console software. If you do not have a backup of the system data, you must reset the PBX to its factory defaults and reprogramme it. Therefore, we strongly recommend maintaining a backup of the system data. For more information on how to back up the system data, refer to the PC Programming Manual.
However, as system passwords can be extracted from backup copies of the system data file, do not allow unauthorised access to these files.

Programming Manual References

PC Programming Manual

2.1.2 Access Levels

2.4.10 Tool—Programmer Code Change

2.17.1 [11-1] Main—Password

PT Programming Manual

None

Feature Guide References

3.1 Capacity of System Resources

2.3.4 Quick Setup

Description

It is possible to set up the basic PBX parameters using a PC. When a PC accesses the PBX for the first time with the Installer Level Programmer Code (→ 2.3.1 PC Programming), Quick Setup display will appear automatically. The following items can be programmed as desired:

Item	Parameter	Description
Date & Time	Year/Month/Date/Hour/Minute	The date and time set on the PC will be used.
System Password	4–10 characters	Enter the system password for installer (→ 2.3.3 Password Security).
Operator & Manager	Extension Number	Assign the PBX operator to all time modes (day/lunch/break/night) (→ 2.2.5 Operator Features). The extension assigned as the PBX operators is automatically allowed to perform manager operation (→ 2.2.6 Manager Features).
Flexible Numbering Feature	**1.** Type 1 (with ✳) **2.** Type 2 (without ✳)	If "**Type 1** (with ✳)" is selected, "✳" must prefix all feature numbers (except access numbers) when an extension user wants to use a feature. **[Example]** Call Pickup feature number **Type 1 (with ✳):** ✳41 **Type 2 (without ✳):** 41 For default of the flexible numbers, refer to the [Flexible Numbering Table (available while a dial tone is heard)] (→ 2.3.6 Flexible Numbering/Fixed Numbering).
Extension	From 101/from 201 (for KX-TDA30/KX-TDA100/KX-TDA200) or from 1001/from 2001 (for KX-TDA600)	Determines the number from which default extension numbers begin.
Operator	0/9	The feature number for Operator Call can be selected.
CO Access	0/1/9	The feature number for Idle Line Access can be selected.
Remote Maintenance Number	Remote Maintenance Dial Number	Enter the complete telephone number of the PBX (including the country code). When necessary, this number will be used to access the PBX from a remote location for maintenance purposes.

Note that the programmable items may vary depending on the version of KX-TDA Maintenance Console being used.

2.3.5 Automatic Setup

Description

There are two automatic setup features as follows:

1) Automatic ISDN Configuration

2) Automatic Time Adjustment

1. Automatic ISDN Configuration

The ISDN (BRI) port configuration can be set automatically through system programming.
The following items will be set by making and receiving a call using the subscriber number assigned for each ISDN (BRI) port:

a) L1 Active Mode

b) L2 Data Link Mode

c) Access Mode (Point-to-Point/Point-to-Multipoint)

d) TEI Assignment Mode (Fix 00–63/Automatic)

2. Automatic Time Adjustment

It is possible to adjust the PBX clock automatically in the following two ways:

a) Summer Time (Daylight Saving Time) Setting:

The start and end dates of the summer time can be programmed. The PBX clock will be adjusted (one hour forward or backward) at 2:00AM of the programmed date, if enabled through system programming. It means 2:00 AM will become 3:00 AM on the start date of the summer time, and 2:00 AM will become 1:00 AM on the end date.

Note

If the Timed Reminder (Wake-up call) is set;

– On the summer time start date, the setting between 2:00 AM and 3:00 AM will not happen.

– On the summer time end date, the setting between 1:00 AM and 2:00 AM will ring twice.

b) Time Information from Telephone Company:

Time information can be received on the following calls:

- An incoming or outgoing call through an ISDN line
- An incoming call through an analogue line with Caller ID which includes the time information.

The PBX clock will be adjusted everyday with the first call after 3:05 AM, if enabled through system programming.

Note

If the Timed Reminder (Wake-up call) is set, the setting will not happen or will ring twice depending on the adjustment.

Conditions

- SMDR will record the call information using the PBX clock so that the recording time will be overlapped at the end of summer time. (→ 1.26.1 Station Message Detail Recording (SMDR))

Programming Manual References

PC Programming Manual

2.4 Tool—2.4.2 Tool—BRI Automatic Configuration

2.8.1 [2-1] Date & Time/Daylight Saving

2.8.17 [2-9] System Options—Option 2—Automatic Time Adjustment—by ISDN & Caller ID (FSK)

PT Programming Manual

None

Feature Guide References

1.21.1.1 Integrated Services Digital Network (ISDN)—SUMMARY

1.28.4 Timed Reminder

2.3.6 Flexible Numbering/Fixed Numbering

Description

To dial another extension user or to access PBX features, the access numbers (extension numbers or feature numbers) are required.
There are three types of numbering plans:

1) Flexible Numbering (available while a dial tone is heard)

2) Flexible Numbering (available while busy, DND, or ringback tone is heard)

3) Fixed Numbering (available while dialling or talking)

1. Flexible Numbering (available while a dial tone is heard)
Extension numbers and feature numbers which are available while a dial tone is heard can be customised for easy use. The numbers must not conflict. It is also possible to use default (Type 1 or Type 2) shown in the following table:

a) Extension Numbers: Extension numbers consist of leading numbers and additional numbers. Extension numbers (consisting of “0” through “9”) can be assigned as follows:

[KX-TDA30/KX-TDA100/KX-TDA200]

- Numbering schemes: 1-64
- Leading number: up to two digits
- Additional number: up to two digits (default: two digits)

[KX-TDA600]

- Numbering schemes: 1-64
- Leading number: up to three digits
- Additional number: up to two digits (default: two digits)

b) Feature Numbers: A number of up to four digits, consisting of "0" through "9", "✳", and "#"

c) Other PBX Extension Numbers (Other PBX Extension Number [TIE] -1 through 16): A number of up to three digits, consisting of "0" through "9", "✳", and "#"

[Flexible Numbering Table (available while a dial tone is heard)]

Feature	Default		
	Type 1 (with ✳)		Type 2 (without ✳)
	KX-TDA30/ KX-TDA100/ KX-TDA200	KX-TDA600	
Extension Numbering Scheme 1—Leading Number	**1 / 2**	**10 / 20**	**10**
Extension Numbering Scheme 2—Leading Number	**2 / 3**	**11 / 21**	**11**
Extension Numbering Scheme 3—Leading Number	**3 / 4**	**12 / 22**	**12**

Feature	Default		
	Type 1 (with ✳)		Type 2 (without ✳)
	KX-TDA30/ KX-TDA100/ KX-TDA200	KX-TDA600	
Extension Numbering Scheme 4—Leading Number	**4 / None**	**13 / 23**	**13**
Extension Numbering Scheme 5—Leading Number	**None**	**14 / 24**	**14**
Extension Numbering Scheme 6—Leading Number	**None**	**15 / 25**	**15**
Extension Numbering Scheme 7—Leading Number	**None**	**16 / 26**	**16**
Extension Numbering Scheme 8—Leading Number	**None**	**17 / 27**	**17**
Extension Numbering Scheme 9—Leading Number	**None**	**18 / 28**	**18**
Extension Numbering Scheme 10—Leading Number	**None**	**19 / 29**	**None**
Extension Numbering Scheme 11—Leading Number	**None**	**20 / 30**	**20**
Extension Numbering Scheme 12—Leading Number	**None**	**21 / 31**	**21**
Extension Numbering Scheme 13—Leading Number	**None**	**22 / 32**	**22**
Extension Numbering Scheme 14—Leading Number	**None**	**23 / 33**	**23**
Extension Numbering Scheme 15—Leading Number	**None**	**24 / 34**	**24**
Extension Numbering Scheme 16—Leading Number	**None**	**25 / 35**	**25**
Extension Numbering Scheme 17—Leading Number	**None**	**26 / 36**	**26**
Extension Numbering Scheme 18—Leading Number	**None**	**27 / 37**	**27**
Extension Numbering Scheme 19—Leading Number	**None**	**28 / 38**	**28**
Extension Numbering Scheme 20—Leading Number	**None**	**29 / 39**	**None**
Extension Numbering Scheme 21—Leading Number	**5 / 5**	**5 / 5**	**19**

Feature	Default		
	Type 1 (with ✳)		Type 2 (without ✳)
	KX-TDA30/ KX-TDA100/ KX-TDA200	KX-TDA600	
Extension Numbering Scheme 22—Leading Number	6 / 6	6 / 6	29
Extension Numbering Scheme 23–64—Leading Number	None	None	None
Operator Call	9 / 0	9 / 0	0
Idle Line Access (Local Access)	0 /1/ 9	0 /1/ 9	9
Trunk Group Access	8	8	8
TIE Line Access	7	7	None
Redial	#	#	#
Speed Dialling—System/Personal	✳✳	✳✳	✳
Personal Speed Dialling—Programming	✳30	✳30	30
Doorphone Call	✳31	✳31	31
Broadcasting	✳32	✳32	None
Group Paging	✳33	✳33	33
External BGM on/off	✳35	✳35	35
Outgoing Message (OGM) playback/ record/clear	✳36	✳36	36
S-CO Line Access	✳37	✳37	37
SVM—Personal Greeting Message playback/record/clear (KX-TDA30 only)	✳38	None	None
Parallel Telephone Mode set/cancel	✳39	✳39	39
Group Call Pickup	✳40	✳40	40
Directed Call Pickup	✳41	✳41	41
TAFAS—Calls through an External Pager	✳42	✳42	42
Group Paging answer	✳43	✳43	43
Automatic Callback Busy cancel/CCBS cancel	✳46	✳46	46
User Remote Operation/Walking COS/ Verification Code Entry	✳47	✳47	47
Wireless XDP Parallel Mode set/cancel	✳48	✳48	48

Feature	Default		
	Type 1 (with ✳)		Type 2 (without ✳)
	KX-TDA30/ KX-TDA100/ KX-TDA200	KX-TDA600	
Account Code Entry	✳49	✳49	49
Call Hold/Call Hold Retrieve	✳50	✳50	50
Call Hold Retrieve—Specified with a Holding Extension Number	✳51	✳51	51
Call Park/Call Park Retrieve	✳52	✳52	52
Call Hold Retrieve—Specified with a Held Trunk Number	✳53	✳53	53
Door Open	✳55	✳55	55
External Relay	✳56	✳56	56
External Feature Access	✳60	✳60	60
ISDN Hold	✳62	✳62	None
COLR set/cancel	✳7✳0	✳7✳0	7✳0
CLIR set/cancel	✳7✳1	✳7✳1	7✳1
Switch CLIP/COLP of the Trunk/Extension	✳7✳2	✳7✳2	7✳2
MCID	✳7✳3	✳7✳3	None
ISDN-FWD set/cancel/confirm	✳7✳5	✳7✳5	None
Message Waiting set/cancel/callback	✳70	✳70	70
FWD/DND set/cancel—Both	✳710	✳710	710
FWD/DND set/cancel—External	✳711	✳711	711
FWD/DND set/cancel—Internal	✳712	✳712	712
FWD/DND No Answer Timer set	✳713	✳713	713
Group FWD set/cancel—Both	✳714	✳714	714
Group FWD set/cancel—External	✳715	✳715	715
Group FWD set/cancel—Internal	✳716	✳716	716
Call Pickup Deny set/cancel	✳720	✳720	720
Paging Deny set/cancel	✳721	✳721	721
Walking Extension	✳727	✳727	727
Data Line Security set/cancel	✳730	✳730	730

Feature	Default		
	Type 1 (with ✳)		Type 2 (without ✳)
	KX-TDA30/ KX-TDA100/ KX-TDA200	KX-TDA600	
Manual Call Waiting for Extension Call off/ BSS/OHCA/Whisper OHCA	✳731	✳731	731
Automatic Call Waiting set/cancel	✳732	✳732	732
Executive Busy Override Deny set/cancel	✳733	✳733	733
Not Ready Mode on/off	✳735	✳735	735
Log-in/Log-out	✳736	✳736	736
Incoming Call Queue Monitor	✳739	✳739	739
Hot Line programme/set/cancel	✳740	✳740	740
Absent Message set/cancel	✳750	✳750	750
BGM set/cancel	✳751	✳751	751
Remote Wake-up Call	✳76✳	✳76✳	76✳
Timed Reminder set/cancel	✳760	✳760	760
Printing Message	✳761	✳761	761
Extension Dial Lock set/cancel	✳77	✳77	77
Time Service Switch	✳780	✳780	780
Remote Extension Dial Lock off	✳782	✳782	782
Remote Extension Dial Lock on	✳783	✳783	783
NDSS Monitor Release	✳784	✳784	784
Trunk Busy Out Clear	✳785	✳785	None
Extension Feature Clear	✳790	✳790	790
Extension Personal Identification Number (PIN) set/cancel	✳799	✳799	799
Dial Information (CTI)	None	None	None
Other PBX Extension Number (TIE) 1–16	None	None	None
Quick Dialling*	None	None	None

* It is possible to register Quick Dialling numbers that overlap with other registered numbers. This is used for the Automatic Rerouting of VoIP Calls To Public Trunk feature.

2. **Flexible Numbering (available while busy, DND, or ringback tone is heard)**
Feature numbers which are available while busy, DND, or ringback tone is heard can be customised for

easy use. The numbers should be one digit ("0" through "9", "✳", or "#") and must not conflict. For default, refer to the following table:

[Flexible Numbering Table (available while busy, DND, or ringback tone is heard)]

Feature	Default
Call Waiting/DND Override	**1 or 2***
Executive Busy Override	**3**
Message Waiting set	**4**
Call Monitor	**5**
Automatic Callback Busy/CCBS	**6**
Alternate Calling—Ring/Voice	**✳**

*: To use Call Waiting/DND Override, both "1" and "2" are available by default.

3. **Fixed Numbering (available while dialling or talking)**
The features which are available while dialling or talking have fixed numbers as shown in the following table:

[Fixed Numbering Table (available while dialling or talking)]

Feature	Fixed Numbering
Pulse to Tone Conversion	**✳**
Conference	**3**
Door Open	**5**

Conditions

[General]

- All features have a default feature number.
- The following are examples of feature number conflicts: 1 and 11, 0 and 00, 2 and 21, 10 and 101, 32 and 321, etc.
- **Feature number + Additional number (Parameter)**
Some flexible feature numbers require additional digits to make the feature active. For example, to set Call Waiting, the feature number for "Call Waiting" must be followed by "1" and to cancel it, the same feature number should be followed by "0".
- If a feature number includes "✳" or "#", rotary SLT users cannot use it.
- ISDN extension users cannot use the following features:
  - OGM playback/record
  - Call Hold/Call Hold Retrieve (held at its own extension)
  - ISDN Hold
  - MCID
  - Walking Extension
  - Call Waiting
  - Hot Line

  - Timed Reminder
  - Executive Busy Override
  - Call Monitor
  - Automatic Callback Busy/CCBS
- PS users cannot use the following features:
  - Personal Speed Dialling
  - OGM playback/record
  - S-CO Line Access
  - Parallel Telephone Mode set/cancel
  - Walking Extension
  - BGM set/cancel
  - Timed Reminder
- Note that extensions that will have a mailbox using a VM in DPT integration must have extension numbers of 2 to 4 digits.
- A PS can only be assigned an extension number of 4 digits or less.

Programming Manual References

PC Programming Manual

2.8.8 [2-6-1] Numbering Plan—Main
→ Extension
→ Features
→ Other PBX Extension

2.8.9 [2-6-2] Numbering Plan—Quick Dial

2.8.10 [2-6-3] Numbering Plan—B/NA DND Call Feature

PT Programming Manual

[100] Flexible Numbering

Feature Guide References

1.24.1 Voice Mail (VM) Group

1.25.1 Portable Station (PS) Connection

3.1 Capacity of System Resources

User Manual References

4.2.1 Feature Number Table

2.3.7 Floating Extension

Description

Virtual extension numbers can be assigned to resources to make them appear as extensions. These numbers are defined as floating extension numbers and can be assigned as a destination of incoming calls etc.

This feature is also known as Floating Station.

Resource		Description	Default
Device	**External Pager**	Used as the destination for TAFAS feature. (→ 1.17.3 Trunk Answer From Any Station (TAFAS))	600
	Outgoing Message (OGM)	Used to send messages for DISA feature. (→ 1.17.6 Direct Inward System Access (DISA))	5 + two-digit OGM number
	Built-in Simplified Voice Message (SVM) (KX-TDA30 only)	Used to access message boxes associated with extensions. (→ 1.17.8 Built-in Simplified Voice Message (SVM))	SVM card 1: 591 SVM card 2: 592
	Analogue Remote Maintenance	Used to access the PC programming mode through a modem on a PC.	599
	ISDN Remote Maintenance	Used to access the PC programming mode through the ISDN interface on a PC.	699
Group	**Incoming Call Distribution Group**	Used to call an incoming call distribution group. (→ 1.2.2.1 Incoming Call Distribution Group Features—SUMMARY)	6 + two-digit group number
	PS Ring Group	Used to call a PS ring group. (→ 1.25.2 PS Ring Group)	—
	VM (DPT) Group	Used to call a VM (DPT) group.	500 (VM [DPT] Group 1)
	VM (DTMF) Group	Used to call a VM (DTMF) group.	—

Conditions

- It is possible to give names to floating extension numbers.

Programming Manual References

PC Programming Manual

2.8.8 [2-6-1] Numbering Plan—Main—Extension

2.9.10 [3-5-1] Incoming Call Distribution Group—Group Settings—Main

→ Floating Extension Number

→ Group Name

2.9.17 [3-7-2] VM(DPT) Group—Unit Settings—Floating Extension No.

2.9.20 [3-8-2] VM(DTMF) Group—Group Settings—Floating Ext No.

2.9.22 [3-9] PS Ring Group—Floating Extension Number

2.11.2 [5-2] External Pager—Page Number 1, Page Number 2—Floating Extension Number
2.11.4 [5-3-2] Voice Message—DISA Message—Floating Extension Number
2.17.1 [11-1] Main—Remote
→ Remote—Analogue Remote (Modem) Floating Extension Number
→ Remote—ISDN Remote Floating Extension Number

PT Programming Manual

[623] Incoming Call Distribution Group Name
[660] VM Group Floating Extension Number
[700] External Pager Floating Extension Number
[730] Outgoing Message (OGM) Floating Extension Number
[731] Outgoing Message (OGM) Name
[811] Modem Floating Extension Number
[812] ISDN Remote Floating Extension Number

Feature Guide References

1.24.1 Voice Mail (VM) Group
2.3.1 PC Programming

2.3.8 Software Upgrading

Description

It is possible to upload software from a PC to the PBX to upgrade the following:

Data File	Storage Area
Main Processing (EMPR/MPR) software data	Operating system data area on either the EMPR card of the KX-TDA600, the MPR card of the KX-TDA100/KX-TDA200, or the Main Board of the KX-TDA30.
Default data of system programming for each country/area	Country/area data area on the EMPR card, MPR card, or Main Board
Language data for PT display	Each language data area on the EMPR card, MPR card, or Main Board. There are two types: **Type 1:** PT display except for PT system programming (→ 2.3.2 PT Programming) (5 languages max.) **Type 2:** PT system programming data (one language max.)
LPR (software on a slot card) software data (KX-TDA100/KX-TDA200/KX-TDA600 only)	Flash ROM on the slot card (e.g., BRI8)
Cell Station (CS) software data	Flash ROM on the CS

Conditions

- The software version of the EMPR or MPR can be confirmed through system programming.

Installation Manual References

KX-TDA100/KX-TDA200

2.3.1 MPR Card

KX-TDA600

2.3.1 EMPR Card

Programming Manual References

PC Programming Manual

2.7.3 [1-1] Slot—MPR Card Property—Memory Version:

PT Programming Manual

[190] Main Processing (MPR) Software Version Reference

2.4 Fault Recovery/Diagnostics

2.4.1 Power Failure Transfer

Description

When the power supply to the PBX fails, specific SLTs and/or ISDN terminal devices are automatically connected to specific trunks (**Power Failure Connections**). The PBX will switch from normal operation to the Power Failure Connections, and all existing conversations will be disconnected.
Only the trunks handled by Power Failure Connections can be used during a power failure.

Conditions

[General]

- Only trunk calls can be made during a power failure. All other features do not work.
- **DC Power Source**
  If the DC power is available from backup batteries, even if the AC power fails, the PBX will remain fully operational.

[KX-TDA600]

- The analogue trunk cards and extension cards, as well as the number of PFT ports (ports which can be used for Power Failure Connections) are as follows:

  Trunk Cards: ELCOT16 (4 PFT ports)
  Extension Cards: EMSLC16 (4 PFT ports), ESLC 16 (4 PFT ports), DHLC8 (2 PFT ports), SLC 8 (2 PFT ports)

  Only connect one extension card to each trunk card.

  Note

  Power Failure Connections must be made within the same shelf. An extension card cannot have a Power Failure Connection with a trunk card of another shelf.

  Through system programming, it is possible to allow trunk calls that are established during a power failure to be maintained even when the power returns and the connection is switched back to the normal configuration from the Power Failure Connection. However, if no special programming is performed, the connection will be dropped when power returns.
- The BRI8 (one PFT port) and BRI4 (one PFT port) cards can also be used for Power Failure Connections. For details about Power Failure Connections, refer to the Installation Manual.

[KX-TDA100/KX-TDA200]

- The analogue trunk cards and extension cards as well as the number of PFT ports (ports which can be used for Power Failure Connections) are as follows:

  Trunk Cards: LCOT16 (4 PFT ports), LCOT8 (2 PFT ports), and LCOT4 (2 PFT ports)
  Extension Cards: MSLC16 (4 PFT ports), SLC16 (4 PFT ports), DHLC8 (2 PFT ports) and SLC8 (2 PFT ports)

  Only connect one extension card to each trunk card.

Note

Through system programming, it is possible to allow trunk calls that are established during a power failure to be maintained even when the power returns and the connection is switched back to the normal configuration from the Power Failure Connection. However, if no special programming is performed, the connection will be dropped when power returns.

- The BRI8 (one PFT port) and BRI4 (one PFT port) cards can also be used for Power Failure Connections. For details about Power Failure Connections, refer to the Installation Manual.

[KX-TDA30]

- Ports 1 and 2 of the LCOT card installed in the least slot number and ports 1 and 2 of the Super Hybrid ports can be used for Power Failure Connections.

Note

The Power Failure Connections between the LCOT card and Super Hybrid ports are automatically kept so that the conversation is maintained when the power is restored and the Main Board is recovering.

- The BRI2 (one port) card can also be used for Power Failure Connections. For details about Power Failure Connections, refer to the Installation Manual.

Installation Manual References

KX-TDA30

2.2.6 Backup Battery Connection

2.11.1 Power Failure Connections

KX-TDA100/KX-TDA200

2.2.6 Backup Battery Connection

2.5.7 SLC16 Card (KX-TDA0174) and MSLC16 Card (KX-TDA0175)

2.12.1 Power Failure Connections

KX-TDA600

2.2.11 Backup Battery Connection

2.7.7 ESLC16 Card (KX-TDA6174) and EMSLC16 Card (KX-TDA6175)

2.14.1 Power Failure Connections

Programming Manual References

PC Programming Manual

2.17.3 [11-3] Power Failure Transfer (KX-TDA100/KX-TDA200/KX-TDA600 only)

PT Programming Manual

None

2.4.2 Power Failure Restart

Description

When turning the electricity back on, the PBX restarts the stored data automatically and the PBX will record the event (System Restart) in the error log.

Conditions

- In the event of a power failure, PBX memory is protected by a factory-provided lithium battery. There is no memory loss except the memories of Automatic Callback Busy (Camp-on) (→ 1.8.1 Automatic Callback Busy (Camp-on)) and Call Park (→ 1.13.2 Call Park).

2.4.3 Local Alarm Information

Description

When a PBX error occurs and the PBX detects it, the System Alarm button light on the PT of an extension, which is allowed to use this feature through system programming (a maximum of two extensions per PBX), turns on red. Pressing the button will show the error number on the display. If multiple errors occur, the error number will be displayed in order of highest priority to lowest. The System Alarm button light turns off automatically after all error numbers have been displayed.
For details about the errors and their solutions, refer to the Installation Manual.

[Error Example]

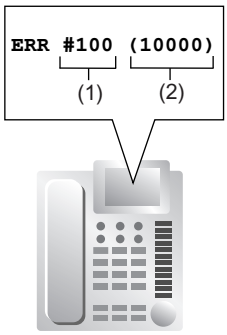

[Explanation]

Number in the Example	Item	Description
(1)	**Error Code**	Shows 3-digit error code.
(2)	**Sub Code**	Shows five-digit sub code (XYYZZ). **X:** Shelf number (1–4) **YY:** Slot number (00–11) **ZZ:** Physical port number (01–16)

Conditions

- **System Alarm Button**
  A flexible button can be customised as the System Alarm button.
- If an extension allowed to utilise this feature uses PC Console or PC Phone, the alarm information will be displayed on the PC, and can be sent to the preprogrammed destination via PC Console or PC Phone. PC Console and PC Phone use e-mail to send the information.
- The alarm information will be recorded on SMDR, if enabled through system programming.
- The PBX can be automatically diagnosed at a preprogrammed time everyday.

Installation Manual References

KX-TDA30

4.1.5 Troubleshooting by Error Log

KX-TDA100/KX-TDA200

4.1.5 Troubleshooting by Error Log

KX-TDA600

4.1.5 Troubleshooting by Error Log

Programming Manual References

PC Programming Manual

2.5.7 Utility—Message File Transfer PBX to PC

2.10.5 [4-1-4] Wired Extension—Flexible Button—Type

2.10.13 [4-2-3] Portable Station—Flexible Button—Type

2.10.17 [4-3] DSS Console—Flexible Button—Type

2.17.1 [11-1] Main

→ SMDR—Print Information—Error Log

→ Maintenance—Local Alarm Display—Extension 1, Extension 2

→ Maintenance—Daily Test Start Time—Set

→ Maintenance—Daily Test Start Time—Hour

→ Maintenance—Daily Test Start Time—Minute

PT Programming Manual

None

Feature Guide References

1.20.2 Flexible Buttons

1.26.1 Station Message Detail Recording (SMDR)

Section 3
Appendix

3.1 Capacity of System Resources

System

Item	KX-TDA30	KX-TDA100/ KX-TDA200	KX-TDA600
Absent Message—Extension	1 x 16 characters		
Absent Message—System	8 x 16 characters		
Call Park Zone	100		
Conference	3-8 parties per conference (32 parties total)		Each shelf: 3-8 parties per conference (32 parties total)
COS	64		
DID/DDI Table	32 digits, 1000 entries		
Extension number	1-4 digits (2-4 digits for extensions which have a VM [DPT] mailbox)		1-5 digits (1-4 digits for PSs, 2-4 digits for extensions which have a VM [DPT] mailbox)
Extension Personal Identification Number (PIN)	10 digits, 1 entry/extension		
Host PBX Access Code	10 digits, 10 entries/trunk group		
Multiple Subscriber Number (MSN)	10 entries per ISDN-BRI port		
Number of Characters of Name	20		
Printing message	8		
Queuing Time Table	64		128
Ring Tone Pattern Plan	8		
Simultaneous Programmers	• one system programmer + 63 personal programmers • one manager programmer + 63 personal programmers • 64 personal programmers		
SMDR Call Storage	200 calls		1000 calls (4000 calls w/ EMEC card)
Special Carrier Access Code	16 digits, 20 entries		16 digits, 100 entries
Tenant	8		
Time Service Holiday	24		
Verification Code	4 digits, 1000 entries		
Verification Code Personal Identification Number (PIN)	10 digits, 1000 entries		

Dialling

Item	KX-TDA30	KX-TDA100/ KX-TDA200	KX-TDA600
Emergency Call	32 digits, 10 entries		
Hot Line	32 digits		
Key Pad Protocol Dial (ISDN Service Access)	32 digits		
Personal Speed Dialling	Without EMEC or MEC: 32 digits, 10 entries/extn.		
	With EMEC or MEC: 32 digits, 100 entries/extn.		
Quick Dialling	4 digits, 80 entries (an additional 1000 8-digit entries w/ MEC card)	4 digits, 80 entries (an additional 4000 8-digit entries w/ EMEC or MEC card)	
Redial	32 digits		
System Speed Dialling	Without MEC: 32 digits, 1000 entries	Without EMEC or MEC: 32 digits, 1000 entries	
	With MEC: Additional 1000 32-digit entries	With EMEC or MEC: Additional 1000 32-digit entries/tenant	

Groups

Item	KX-TDA30	KX-TDA100/KX-TDA200	KX-TDA600
Broadcasting Group	8 (32 members/group)		
Call Pickup Group	64		96
Idle Extension Hunting Group	64 (16 extensions/group)		128 (16 extensions/ group)
Incoming Call Distribution Group	128 (32 extensions/group)		128 (128 extensions/ group)
Paging Group	32		96
PS Ring Group	32		
Trunk Group	64		96
VM (DPT) Group	1 group x 4 ports (8 channels)	2 groups x 12 ports (24 channels)	8 groups x 12 ports (24 channels)
VM (DTMF)Group	2 groups x 24 channels	2 groups x 32 channels	8 groups x 32 channels

TRS/Barring

Item	KX-TDA30/KX-TDA100/KX-TDA200/KX-TDA600
TRS/Barring Level	7
TRS/Barring Denied Code	16 digits, 100 entries/level

Item	KX-TDA30/KX-TDA100/KX-TDA200/KX-TDA600
TRS/Barring Exception Code	16 digits, 100 entries/level

ARS

Item	KX-TDA30/KX-TDA100/KX-TDA200	KX-TDA600
Routing Plan Table	16 entries	48 entries
Leading Number Table	16 digits, 1000 entries	
Leading Number Exception Table	16 digits, 200 entries	
ARS Carrier	10	48
Itemised Billing Code	10 digits	
Authorisation Code	10 digits	

Call Log and Message Waiting

Item	KX-TDA30	KX-TDA100/ KX-TDA200	KX-TDA600
Outgoing Call Log—PT	100 records/extn. 240 records/system	100 records/extn. 1520 records/system	100 records/extn. 3200 records/system
Outgoing Call Log—PS	100 records/extn. 140 records/system	100 records/extn. 640 records/system	100 records/extn. 2560 records/system
Incoming Call Log—PT	100 records/extn. 480 records/system	100 records/extn. 3040 records/system	100 records/extn. 6400 records/system
Incoming Call Log—PS + Incoming Call Distribution Group	100 records/extn. or group Total 2048 records/system		100 records/extn. or group Total 6400 records/ system
Message Waiting—PS + Incoming Call Distribution Group	256		640
Message Waiting—PT + SLT	256	512	1032

Voice Message

Item	KX-TDA30	KX-TDA100/KX-TDA200/KX-TDA600
Outgoing Message (OGM)	32	64
OGM Total Recording Time	8 minutes	
Built-in Simplified Voice Message (SVM)	125 messages/card	not available
SVM Total Recording Time	40, 60, or 120 minutes (depending on the recording quality)	not available

Hospitality and Charge Management Features

Item	KX-TDA30	KX-TDA100/ KX-TDA200	KX-TDA600
Billing items for guest rooms (only available w/ EMEC or MEC)	1000 records/PBX	4000 records/PBX	8000 records/PBX
Hotel Operator	4		
Charge Rate	7 digits including a decimal		
Charge Denomination	3 currency characters/symbols		

Networking

Item	KX-TDA30/KX-TDA100/KX-TDA200/KX-TDA600
TIE Line Routing and Modification Table	32 entries
Leading Number	3 digits
PBX Code	7 digits
NDSS: Monitored PBXs	8
NDSS: Registered Extensions for Monitor PBX	250

CTI

Item	KX-TDA30	KX-TDA100	KX-TDA200	KX-TDA600
PC Console	2	8		
PC Phone	24	64	128	

Password

Item	KX-TDA30/KX-TDA100/KX-TDA200/KX-TDA600
System Password for Installer	4 – 10 characters
System Password for Administrator—for PC Programming	4 – 10 characters
System Password for User—for PC Programming	4 – 10 characters
System Password for Administrator—for PT Programming	4 – 10 digits
System Password for User—for PT Programming	4 – 10 digits
Manager Password	4 – 10 digits

Programmer Code

Item	KX-TDA30/KX-TDA100/KX-TDA200/KX-TDA600
Installer Level Programmer Code	4 – 16 characters
Administrator Level Programmer Code	4 – 16 characters
User Level Programmer Code	0 – 16 characters

3.2 Exclusive Features Table

The KX-TDA30, KX-TDA100/KX-TDA200, and KX-TDA600 support certain features only available for that PBX model. The table below lists the features that are available depending on the PBX model.

	KX-TDA30	KX-TDA100/ KX-TDA200	KX-TDA600
1.6.1.3 KX-T7710 One-touch Dialling		✔	✔
1.17.8 Built-in Simplified Voice Message (SVM)	✔		
1.17.7 Automatic Fax Transfer	✔		
1.23.1 T1 Line Service		✔	✔
1.31.1 IP Proprietary Telephone (IP-PT)		✔	✔

✔: Available

3.3 Tones/Ring Tones

3.3.1 Tones/Ring Tones

Tone Patterns (Default)

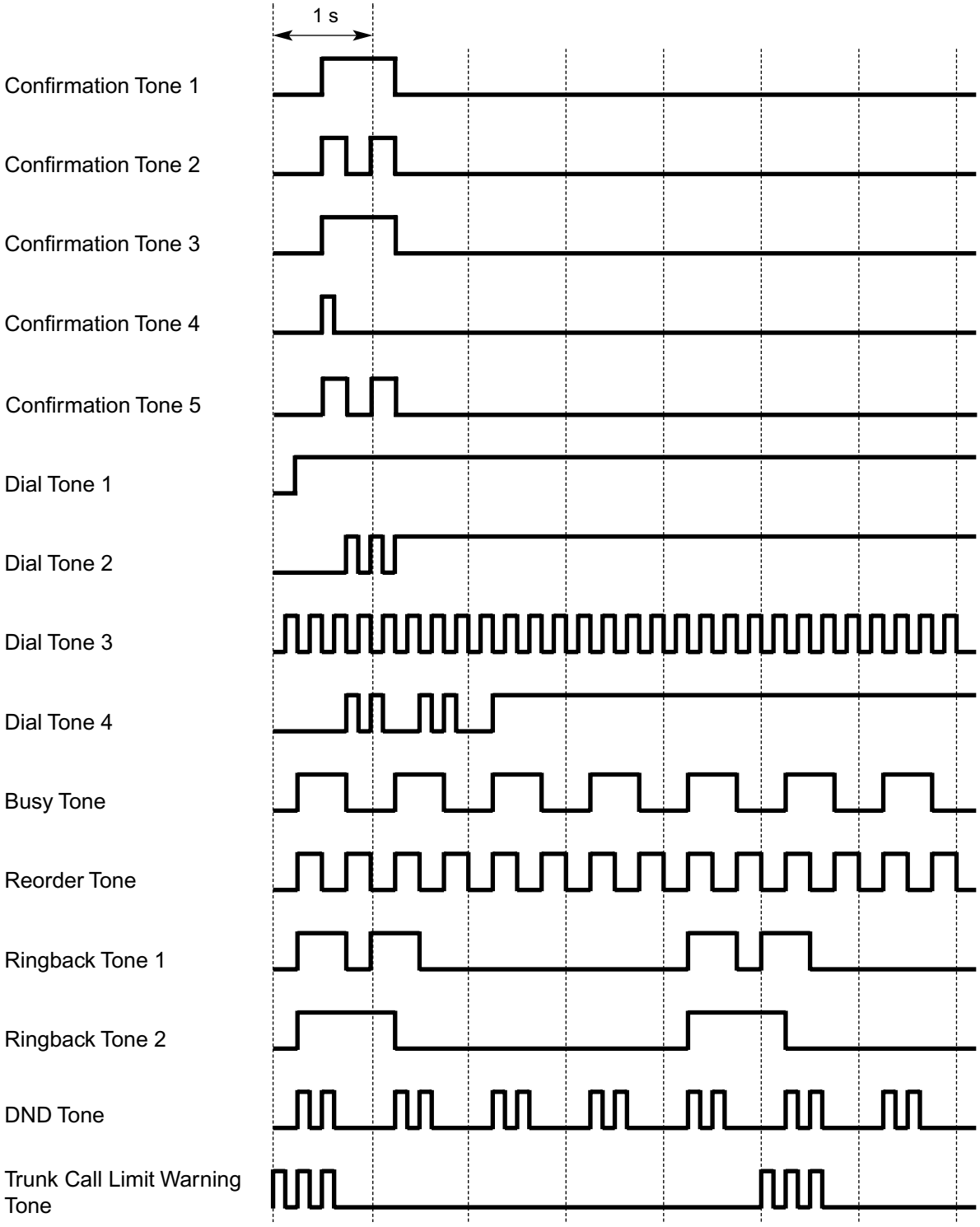

Tone Patterns (Default)

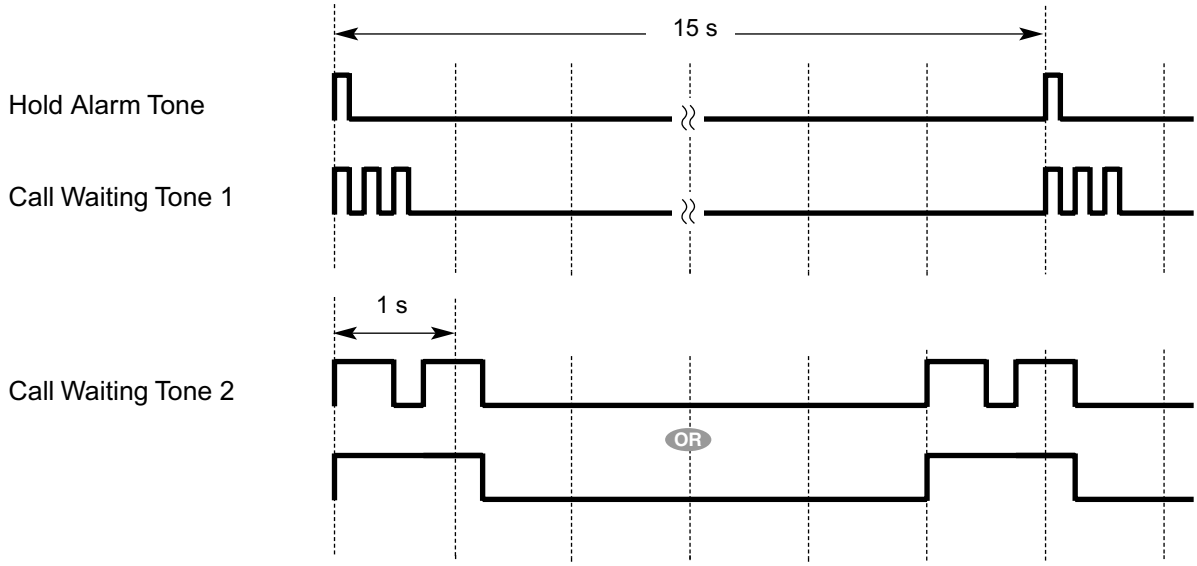

Ring Tone Patterns (Default)*

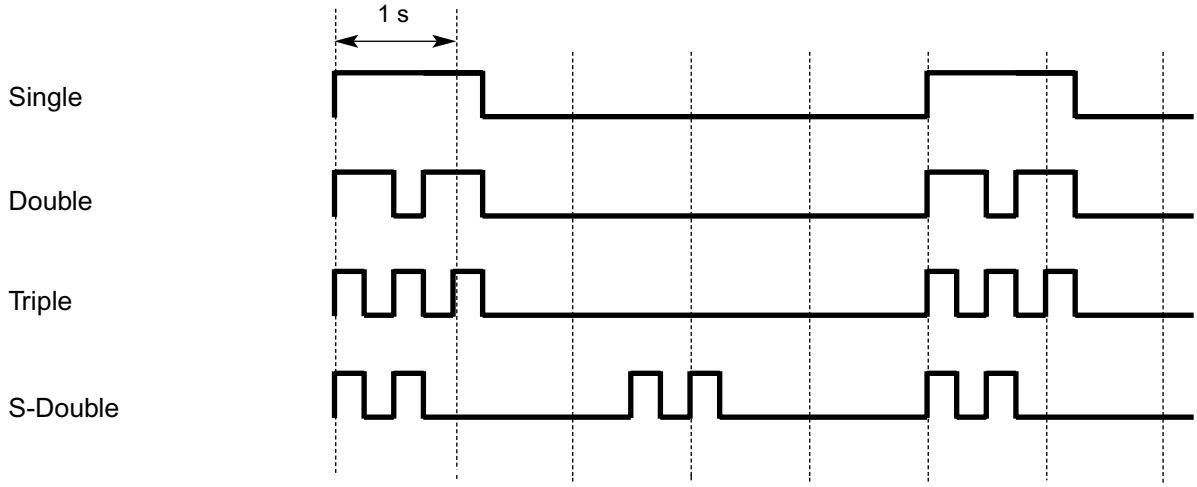

*: The duration of a ring tone may vary by country/area.

3.4 Revision History

3.4.1 KX-TDA100/KX-TDA200 PMPR Software File Version 1.1xxx

New Contents

- 1.5.4.2 Emergency Call
  CLIP Number Notification
- 1.6.1.4 Last Number Redial
  Outgoing Call Log Display by REDIAL Button
- 1.6.1.5 Speed Dialling—Personal/System
  System Speed Dialling Display by AUTO DIAL/STORE Button
- 1.11.9 Parallelled Telephone
  Digital XDP
- 1.16 Broadcasting Features
- 1.21.1.8 Three-party Conference (3PTY)—by ISDN
- 1.24.3 Voice Mail DPT (Digital) Integration
  DID Number Notification to the VPS

Changed Contents

- 1.2.2.2 Group Call Distribution
  [How the Group Call Waiting Feature Activates]
- 1.4.1.3 Call Pickup
  [Directed Call Pickup]
- 1.15.1 Paging
  Paging Group
- 1.20.1 Fixed Buttons
  FLASH/RECALL
- 1.20.3 LED Indication
  Light Pattern of the Message/Ringer Lamp
  Light Pattern of the Corresponding Extension Status Button

- 1.25.1 Portable Station (PS) Connection
  Handover

- 1.26.1 Station Message Detail Recording (SMDR)
  CD (Condition Code)

- 2.1.1 Extension Port Configuration

- 2.2.4 Time Service
  Features Using Time Service

- 3.1 Capacity of System Resources

3.4.2 KX-TDA100/KX-TDA200 PMPR Software File Version 2.0xxx

New Contents

- 1.5.4.6 Trunk Busy Out
- 1.17.9 External Sensor
- 1.17.10 External Relay Control
- 1.27 Hospitality Features
- 1.30.5.1 Network Direct Station Selection (NDSS)
- 1.31 IP Proprietary Telephone (IP-PT) Features
- 2.2.6 Manager Features
  Trunk Busy Out Clear
- 2.3.3 Password Security

Changed Contents

- 1.1.3.3 Call Waiting
- 1.6.1.4 Last Number Redial
- 1.9.1 Toll Restriction (TRS)/Call Barring (Barring)
- 1.20.2 Flexible Buttons
- 1.25.1 Portable Station (PS) Connection
- 1.26.1 Station Message Detail Recording (SMDR)
- 1.28.4 Timed Reminder
- 1.32.1 Computer Telephony Integration (CTI)
- 2.3.6 Flexible Numbering/Fixed Numbering
- 3.1 Capacity of System Resources

KX-TDA0920 SD Memory Card for Software Upgrade to Enhanced Version-only Features

- 1.30.5.1 Network Direct Station Selection (NDSS)

- 1.32.1 Computer Telephony Integration (CTI)
  SD Memory Card required for some features only

3.4.3 KX-TDA100/KX-TDA200/KX-TDA600 PMPR/PLMPR Software File Version 3.0xxx

New Contents

- 1.2.2.2 Group Call Distribution
  Automatic Call Distribution (ACD)
- 1.2.2.3 Outside Destinations in Incoming Call Distribution Group
- 1.17.6 Direct Inward System Access (DISA)
  DISA Automatic Walking COS
  DISA Call Transfer from Outside Destination
- 1.25.6 Virtual PS
- 1.30.1 TIE Line Service
  [TIE Call by Own PBX Extension Number]
- 1.30.2 Voice over Internet Protocol (VoIP) Network
  Automatic Rerouting of VoIP Calls to Public Trunks
- 1.30.5.2 Centralised Voice Mail
- 1.30.6.1 PS Roaming by Network ICD Group
- 1.33.1 Cellular Phone Features—SUMMARY

Changed Contents

- 1.2.2.1 Incoming Call Distribution Group Features—SUMMARY
  ICD Group button
- 1.2.2.7 Log-in/Log-out
  Wrap-up Timer
- 1.3.1.1 Call Forwarding (FWD)/Do Not Disturb (DND)—SUMMARY
- 1.4.1.4 Hands-free Answerback
- 1.5.5.2 Line Preference—Outgoing
- 1.6.1.6 Quick Dialling
- 1.12.1 Call Transfer
  One-touch Transfer

- 1.14.1.2 Conference
- 1.17.6 Direct Inward System Access (DISA)
  End of Call Detection
- 1.30.4.1 QSIG Standard Features—SUMMARY
- 1.30.5.1 Network Direct Station Selection (NDSS)
- 2.3.2 PT Programming
- 2.3.6 Flexible Numbering/Fixed Numbering
- 3.1 Capacity of System Resources

KX-TDA0920/KX-TDA6920 SD Memory Card for Software Upgrade to Enhanced Version-only Features

- 1.2.2.2 Group Call Distribution
  Automatic Call Distribution (ACD)
- 1.2.2.3 Outside Destinations in Incoming Call Distribution Group
- 1.17.6 Direct Inward System Access (DISA)
  DISA Automatic Walking COS
  DISA Call Transfer from Outside Destination
- 1.30.6.1 PS Roaming by Network ICD Group
- 1.30.1 TIE Line Service
  [TIE Call by Own PBX Extension Number]
- 1.30.5.1 Network Direct Station Selection (NDSS)
- 1.30.5.2 Centralised Voice Mail
- 1.32.1 Computer Telephony Integration (CTI)
  SD Memory Card required for some features only

3.4.4 KX-TDA30 PSMPR Software File Version 1.1xxx

New Contents

- 1.16 Broadcasting Features
- 1.21.1.8 Three-party Conference (3PTY)—by ISDN
- 1.24.3 Voice Mail DPT (Digital) Integration
  DID Number Notification to the VPS

Changed Contents

- 1.4.1.3 Call Pickup
  [Directed Call Pickup]
- 1.11.9 Parallelled Telephone
  Digital XDP
- 1.15.1 Paging
  Paging Group
- 1.20.3 LED Indication
  Light Pattern of the Message/Ringer Lamp
  Light Pattern of the Corresponding Extension Status Button
- 1.25.1 Portable Station (PS) Connection
  Handover
- 1.26.1 Station Message Detail Recording (SMDR)
  CD (Condition Code)
- 2.2.4 Time Service
  Features Using Time Service
- 3.1 Capacity of System Resources

3.4.5 KX-TDA30 PSMPR Software File Version 2.0xxx

New Contents

- 1.5.4.6 Trunk Busy Out
- 1.17.7 Automatic Fax Transfer
- 1.17.9 External Sensor
- 1.17.10 External Relay Control
- 1.27 Hospitality Features
- 1.30.5.1 Network Direct Station Selection (NDSS)
- 2.2.6 Manager Features
  Trunk Busy Out Clear
- 2.3.3 Password Security

Changed Contents

- 1.1.3.3 Call Waiting
- 1.6.1.4 Last Number Redial
  Outgoing Call Log
- 1.9.1 Toll Restriction (TRS)/Call Barring (Barring)
- 1.20.2 Flexible Buttons
- 1.25.1 Portable Station (PS) Connection
- 1.26.1 Station Message Detail Recording (SMDR)
- 1.28.4 Timed Reminder
- 1.32.1 Computer Telephony Integration (CTI)
- 2.3.6 Flexible Numbering/Fixed Numbering
- 3.1 Capacity of System Resources

KX-TDA3920 SD Memory Card for Software Upgrade to Enhanced Version-only Features

- 1.30.5.1 Network Direct Station Selection (NDSS)

- 1.32.1 Computer Telephony Integration (CTI)
  SD Memory Card required for some features only

3.4.6 KX-TDA30 PSMPR Software File Version 2.2xxx

New Contents

- 1.5.4.6 Trunk Busy Out
- 1.17.8 Built-in Simplified Voice Message (SVM)
- 1.17.7 Automatic Fax Transfer
- 1.17.9 External Sensor
- 1.17.10 External Relay Control
- 1.27 Hospitality Features
- 1.30.5.1 Network Direct Station Selection (NDSS)
- 2.2.6 Manager Features
  Trunk Busy Out Clear
- 2.3.3 Password Security

Changed Contents

- 1.1.3.3 Call Waiting
- 1.6.1.4 Last Number Redial
  Outgoing Call Log
- 1.9.1 Toll Restriction (TRS)/Call Barring (Barring)
- 1.20.2 Flexible Buttons
- 1.25.1 Portable Station (PS) Connection
- 1.26.1 Station Message Detail Recording (SMDR)
- 1.28.4 Timed Reminder
- 1.29.1 Dial Tone
- 1.32.1 Computer Telephony Integration (CTI)
- 2.3.6 Flexible Numbering/Fixed Numbering

- 3.1 Capacity of System Resources

KX-TDA3920 SD Memory Card for Software Upgrade to Enhanced Version-only Features

- 1.30.5.1 Network Direct Station Selection (NDSS)

- 1.32.1 Computer Telephony Integration (CTI)
  SD Memory Card required for some features only

3.4.7 KX-TDA30 PSMPR Software File Version 3.0xxx

New Contents

- 1.2.2.2 Group Call Distribution
  Automatic Call Distribution (ACD)
- 1.2.2.3 Outside Destinations in Incoming Call Distribution Group
- 1.17.6 Direct Inward System Access (DISA)
  DISA Automatic Walking COS
  DISA Call Transfer from Outside Destination
- 1.25.6 Virtual PS
- 1.30.1 TIE Line Service
  [TIE Call by Own PBX Extension Number]
- 1.30.2 Voice over Internet Protocol (VoIP) Network
  Automatic Rerouting of VoIP Calls to Public Trunks
- 1.30.5.2 Centralised Voice Mail
- 1.30.6.1 PS Roaming by Network ICD Group
- 1.33.1 Cellular Phone Features—SUMMARY

Changed Contents

- 1.2.2.1 Incoming Call Distribution Group Features—SUMMARY
  ICD Group button
- 1.2.2.7 Log-in/Log-out
  Wrap-up Timer
- 1.3.1.1 Call Forwarding (FWD)/Do Not Disturb (DND)—SUMMARY
- 1.4.1.4 Hands-free Answerback
- 1.5.5.2 Line Preference—Outgoing
- 1.6.1.6 Quick Dialling
- 1.12.1 Call Transfer
  One-touch Transfer

- 1.14.1.2 Conference

- 1.17.6 Direct Inward System Access (DISA)
  End of Call Detection

- 1.30.4.1 QSIG Standard Features—SUMMARY

- 1.30.5.1 Network Direct Station Selection (NDSS)

- 2.3.2 PT Programming

- 2.3.6 Flexible Numbering/Fixed Numbering

- 3.1 Capacity of System Resources

KX-TDA3920 SD Memory Card for Software Upgrade to Enhanced Version-only Features

- 1.2.2.2 Group Call Distribution
  Automatic Call Distribution (ACD)

- 1.2.2.3 Outside Destinations in Incoming Call Distribution Group

- 1.17.6 Direct Inward System Access (DISA)
  DISA Automatic Walking COS
  DISA Call Transfer from Outside Destination

- 1.30.6.1 PS Roaming by Network ICD Group

- 1.30.1 TIE Line Service
  [TIE Call by Own PBX Extension Number]

- 1.30.5.1 Network Direct Station Selection (NDSS)

- 1.30.5.2 Centralised Voice Mail

- 1.32.1 Computer Telephony Integration (CTI)
  SD Memory Card required for some features only

3.4.8 KX-TDA600 PLMPR Software File Version 3.1xxx

New Contents

- 1.7.1 Primary Directory Number (PDN)/Secondary Directory Number (SDN) Extension
- 1.1.3.3 Call Waiting
  Automatic Call Waiting
- 1.30.1 TIE Line Service
  Override using an Itemised Billing Code for ARS

Changed Contents

- 1.1.1.6 Intercept Routing
- 1.4.1.2 Line Preference—Incoming
- 1.5.3 Intercom Call
- 1.5.5.2 Line Preference—Outgoing
- 1.9.5 Walking COS
- 1.12.1 Call Transfer
- 1.17.6 Direct Inward System Access (DISA)
- 1.18.2 Incoming Call Log
- 1.20.2 Flexible Buttons
- 1.20.3 LED Indication
- 1.30.1 TIE Line Service
  Blocking trunk calls made through another PBX and how to override it
- 2.2.1 Class of Service (COS)

Index

A

AA —> Automated Attendant 200
Absent Message 235
Account Code Entry 91
Advice of Charge (AOC) 256
Alarm Information, Local 436
Alternate Calling—Ring/Voice 87
Alternate Receiving/Calling Mode (Ring/Voice) Override 83
Alternate Receiving—Ring/Voice 87
ANI —> Automatic Number Identification 223
Answering Features 79
Answering, One-touch Direct 79
AOC —> Advice of Charge 256
Appendix 439
ARS —> Automatic Route Selection 147
Audible Tone Features 328
Authorisation Code 151
Automated Attendant 200
Automatic Call Hold 173
Automatic Call Park 176
Automatic Call Waiting 43
Automatic Callback Busy (Camp-on) 124
Automatic Extension Release 86
Automatic Fax Transfer 211
Automatic Log-out 65
Automatic Number Identification (ANI) 223
Automatic Privacy 184
Automatic Redial 111
Automatic Rerouting of VoIP Calls to Public Trunks 357
Automatic Route Selection (ARS) 147
Automatic Setup 421
Automatic Station Release —> Automatic Extension Release 86

B

Background Music (BGM) 195
Barring 133
BGM —> Background Music 195
BGM—External 195
Billing Code, Itemised 151
Billing for Guest Room Calls 318
Block, Internal Call 38
Boss & Secretary feature 72
Broadcasting 188
Broadcasting Group 188
Budget Management 138
Built-in Simplified Voice Message (SVM) 213
Busy on Busy 62
Busy Override Deny, Executive 125
Busy Override, Executive 125
Busy Station Signalling (BSS) —> Call Waiting 43
Buttons, Fixed 237
Buttons, Flexible 240
Buttons, PS Feature 296

C

Call Billing for Guest Room 318
Call Charge Management 312
Call Charge Services 311
Call Directory—Extension Dialling 87
Call Directory—Speed Dialling 113
Call Forwarding (CF)—by ISDN (P-MP) 257
Call Forwarding (CF)—by ISDN (P-P) 259
Call Forwarding (CF)—by QSIG 365
Call Forwarding (FWD) 69, 70
Call Hold 173
Call Hold (HOLD)—by ISDN 261
Call Hold Retrieve Deny 173
Call Hold, Automatic 173
Call Log, Incoming 228
Call Log, Outgoing 111
Call Monitor 126
Call Park 176
Call Park Recall 176
Call Park Retrieve Deny 176
Call Pickup 81
Call Pickup Group 81, 396
Call Pickup, Directed 81
Call Splitting 178
Call Transfer 170
Call Transfer (CT)—by ISDN 262
Call Transfer (CT)—by QSIG 367
Call Transfer with Announcement 170
Call Transfer without Announcement 170
Call Transfer—Screened —> Call Transfer with Announcement 170
Call Transfer—Unscreened —> Call Transfer without Announcement 170
Call Waiting 43
Call Waiting Caller ID (Visual Caller ID) 44
Call Waiting Tone 130
Callback Busy, Automatic (Camp-on) 124
Caller ID 223
Calling Line Identification (CLI) Distribution 28
Calling Line Identification Presentation (CLIP) 223, 253
Calling Line Identification Presentation (CLIP)—by QSIG 363
Calling Line Identification Restriction (CLIR) 253
Calling Name Identification Presentation (CNIP)—by QSIG 363
Calling Party Control (CPC) Signal Detection 169
Capacity of System Resources 440
Carrier Access Code, Special 100
CCBS by QSIG —> Completion of Calls to Busy Subscriber—by QSIG 369
CCBS —> Completion of Calls to Busy Subscriber 265
Cellular Phone Features—SUMMARY 389
Cellular Phone XDP Parallel 55
Centralised Voice Mail 375
Centrex Service, ISDN 250
CF by ISDN (P-MP) —> Call Forwarding—by ISDN (P-MP) 257
CF by ISDN (P-P) —> Call Forwarding—by ISDN (P-P) 259
CF by QSIG —> Call Forwarding—by QSIG 365
Charge Management, Call 312
Charge Services, Call 311
Circular Hunting 45
Class of Service (COS) 394
CLI —> Calling Line Identification Distribution 28
CLIP by QSIG —> Calling Line Identification Presentation—by QSIG 363
CLIP —> Calling Line Identification Presentation 223, 253
CLIR —> Calling Line Identification Restriction 253, 363
CNIP by QSIG —> Calling Name Identification Presentation—by QSIG

363
CNIR —> Calling Name Identification Restriction 364
Code Entry, Verified 144
COLP by QSIG —> Connected Line Identification Presentation—by QSIG 363
COLP —> Connected Line Identification Presentation 253
COLR —> Connected Line Identification Restriction 253, 363
Completion of Calls to Busy Subscriber (CCBS) 265
Completion of Calls to Busy Subscriber (CCBS)—by QSIG 369
Computer Telephony Integration (CTI) 384
Conference 181, 182, 188
Confirmation Tone 330
Connected Line Identification Presentation (COLP) 253
Connected Line Identification Presentation (COLP)—by QSIG 363
Connected Line Identification Restriction (COLR) 253
Connected Name Identification Presentation (CONP)—by QSIG 363
CONP by QSIG —> Connected Name Identification Presentation—by QSIG 363
CONR —> Connected Name Identification Restriction 364
Consultation Hold 161, 170, 178
COS —> Class of Service 394
CPC —> Calling Party Control Signal Detection 169
CT by ISDN —> Call Transfer—by ISDN 262
CT by QSIG —> Call Transfer—by QSIG 367
CTI —> Computer Telephony Integration 384

D

Data Line Security 158
DDI —> Direct Dialling In 22
Delayed Ringing 51
Denied Code Tables 133
Diagnostics 433
Dial Tone 328
Dial Tone Transfer 140
Dial Type Selection 93
Dialling Digit Restriction during Conversation 163
Dialling, One-touch 109
DID —> Direct Inward Dialling 22
Digital XDP 165
DIL —> Direct In Line 20
Direct Dialling In (DDI) 22
Direct In Line (DIL) 20
Direct Inward Dialling (DID) 22
Direct Inward System Access (DISA) 200
Direct One-touch Answering 79
Direct Recording 214
Direct Trunk Access 103
Directed Call Pickup 81
Directory, Call—Extension Dialling 87
Directory, Call—Speed Dialling 113
Directory, PS 295
DISA AA Service —> DISA Built-in Automated Attendant Number 200
DISA Automatic Walking COS 203
DISA Built-in Automated Attendant Number (DISA AA Service) 200
DISA Intercept Routing—Busy 201
DISA Intercept Routing—DND 202
DISA Intercept Routing—No Answer 202
DISA Intercept Routing—No Dial 200
DISA Security Mode 201
DISA —> Direct Inward System Access 200
Display Information 246
Display Lock 113, 216, 229
Distribution, Group Call 51
DND Override 74
DND —> Do Not Disturb 69, 74
DND, Paging 74, 186
Do Not Disturb (DND) 69, 74
Door Open 193
Doorphone Call 191

E

E1 Line Service 269
EFA —> External Feature Access 161
Electronic Station Lockout —> Extension Dial Lock 139
Emergency Call 90
Exception Code Tables 133
Exclusive Call Hold 173
Exclusive Features Table 445
Executive Busy Override 125
Executive Busy Override Deny 125
Extension Controlling Features 321
Extension Dial Lock 139
Extension Feature Clear 323
Extension Personal Identification Number (PIN) 321
Extension PIN Lock 321
Extension Port Configuration 392
Extension Release, Automatic 86
Extension User Group 396
Extension-to-Trunk Call Duration 163
External Feature Access (EFA) 161
External Relay Control 221
External Sensor 219
EXtra Device Port (XDP) 392

F

Fault Recovery/Diagnostics 433
Fax Transfer, Automatic 211
Feature Clear, Extension 323
Feature Highlights 5
First Party Call Control 384
Fixed Buttons 237
Flash/Recall/Terminate 159
Flexible Buttons 240
Flexible Numbering/Fixed Numbering 423
Floating Extension 430
Floating Station —> Floating Extension 430
Full One-touch Dialling 109
FWD —> Call Forwarding 69, 70
FWD, Multiple 72
FWD/DND Button Types 76
FWD/DND Button, Group FWD Button 76
FWD/DND Setting by Fixed FWD/DND button 77
FWD—All Calls 70
FWD—Busy 70
FWD—Busy/No Answer 70
FWD—Follow Me 70
FWD—No Answer 70

G

Group 396
Group Call Distribution 51
Group Call Pickup 81
Group FWD Button Types 76
Group, Broadcasting 188
Group, Call Pickup 81, 396
Group, Extension User 396
Group, Idle Extension Hunting 45, 397
Group, Incoming Call Distribution 47, 397
Group, Paging 185, 397
Group, PS Ring 292, 398
Group, Trunk 396
Group, Voice Mail (VM) 273, 398

H

Handover 290
Handset/Headset Selection —> Headset Operation 156
Hands-free Answerback 83
Hands-free Operation 153
Headset Operation 156
Hold Recall 173
Hold Retrieve Deny, Call 173
Hold, Call 173
Hold, Call (HOLD)—by ISDN 261
Hold, Consultation 161, 170, 178
Hold, Exclusive Call 173
Hospitality Features 314
Host PBX Access Code (Access Code to the Telephone Company from a Host PBX) 98
Hot Line 117
Hotel Operator 315
Hunting, Circular 45
Hunting, Idle Extension 45
Hunting, Priority 51
Hurry-up Transfer —> Manual Queue Redirection 58

I

ICD Group —> Incoming Call Distribution Group 47, 397
Idle Extension Hunting 45
Idle Extension Hunting Group 45, 397
Idle Line Access (Local Access) 103
Idle Line Preference 102
Incoming Call Distribution Group 47, 397
Incoming Call Indication Features 40
Incoming Call Log 228
Incoming Call Queue Monitor 67
Incoming Trunk Call Features 16
Integrated Services Digital Network (ISDN) 248
Intercept Routing 30
Intercept Routing, DISA—Busy 201
Intercept Routing, DISA—DND 202, 208
Intercept Routing, DISA—No Answer 202
Intercept Routing, DISA—No Dial 200, 208
Intercept Routing—Busy 30
Intercept Routing—DND 30
Intercept Routing—No Answer (IRNA) 30
Intercept Routing—No Destination 35
Intercept Routing—Overflow in an Incoming Call Distribution Group 61
Intercom Call 87
Internal Call Block 38
Internal Call Features 36
Interrupt Redial 111
IP Proprietary Telephone (IP-PT) 382
IRNA —> Intercept Routing—No Answer 30
ISDN Centrex Service 250
ISDN Extension 266
ISDN Service Access by Keypad Protocol 268
ISDN —> Integrated Services Digital Network 248
Itemised Billing Code 151

L

Last Number Redial 111
LCS —> Live Call Screening 286
LED Indication 119, 243
Line Preference Override 102
Line Preference—Incoming 80
Line Preference—Outgoing 102
Live Call Screening (LCS) 286
Local Alarm Information 436
Lock, Display 113, 216, 229
Lock, Extension Dial 139
Lock, Extension PIN 321
Lock, Remote Extension Dial 139
Log-in/Log-out 64
Log-in/Log-out Monitor 65

M

Making Calls with an SDN Button 118
Malicious Call Identification (MCID) 264
Manager Features 411
Manual Queue Redirection 58
MCID —> Malicious Call Identification 264
Memory Dialling Features 106
Message Features 231
Message Waiting 231
Message, Absent 235
Message, Outgoing (OGM) 197
Message, Printing 310
Monitor, Call 126
MSN —> Multiple Subscriber Number Ringing Service 25
Multiple FWD 72
Multiple Subscriber Number (MSN) Ringing Service 25
Multiple VPSs 377
Music on Hold 179
Music, Background (BGM) 195
Mute 155

N

NDSS —> Network Direct Station Selection 370
Network Direct Station Selection (NDSS) 370
Network ICD Group 378
Networking Features 332
No Line Preference 80, 102
Numbering, Fixed/Flexible 423

O

Off-hook Call Announcement (OHCA) 131
Off-hook Monitor 154
OGM —> Outgoing Message 197
OHCA —> Off-hook Call Announcement 131
OHCA, Whisper 132
One-touch Answering, Direct 79
One-touch Dialling 109
One-touch Dialling, Full 109
One-touch Transfer 171
Operator Call 410
Operator Features 410
Operator, Hotel 315
Outgoing Call Log 111
Outgoing Message (OGM) 197
Outside Destinations in Incoming Call Distribution Group 55
Overflow Feature 61

P

Paging 185
Paging Deny 185
Paging DND 74, 186
Paging Group 185, 397
Parallelled Telephone 165
Password 418
Pause Insertion 97
PC Console 387
PC Phone 387
PC Programming 413
PDN —> Primary Directory Number 118
Personal Identification Number (PIN), Extension 321
Personal Identification Number (PIN), Verification Code 144
Personal Speed Dialling 113
Pickup Dialling —> Hot Line 117
Pickup, Group Call 81, 396
PIN Lock, Extension 321
PIN —> Extension Personal Identification Number 321
PIN —> Verification Code Personal Identification Number 144
Port Configuration, Extension 392
Portable Station (PS) Connection 290
Portable Station (PS) Features 290
Power Failure Connections 433
Power Failure Restart 435
Power Failure Transfer 433
Predialling 85
Primary Directory Number (PDN) 118
Prime Line Preference 80, 102
Printing Message 310
Priority Hunting 51
Privacy Release 184
Proprietary Telephone (PT) Features 237
PS Directory 295
PS Feature Buttons 296
PS Ring Group 292, 398
PS Roaming by Network ICD Group 380
PS —> Portable Station Features 290
PT Programming 416
PT —> Proprietary Telephone Features 237
Pulse to Tone Conversion 93

Q

QSIG Enhanced Features 370
QSIG Standard Features 361
Queue Redirection, Manual 58
Queuing Feature 57
Quick Dialling 115
Quick Setup 420

R

Recall 159
Recording into the VPS, Two-way 286
Recording, Direct 214
Redial, Automatic 111
Redial, Interrupt 111
Redial, Last Number 111
Relay Control, External 221
Remote Control 67
Remote Extension Dial Lock 139
Remote Station Lock Control —> Remote Extension Dial Lock 139
Reverse Circuit 95
Revision History 448
Ring 51
Ring Tone Pattern Selection 41
Ring Tones 446
Ringing Line Preference 80
Room Status Control 315
Route Selection, Automatic (ARS) 147

S

S-CO Line Access 103
Screening, Live Call (LCS) 286
SDN Direct Dial 118
SDN Walking COS 118
SDN —> Secondary Directory Number 118
Second Call Notification to Busy Extension 128
Secondary Directory Number (SDN) 118
Security Mode, DISA 201
Sensor, External 219
Setup, Automatic 421
Setup, Quick 420
SMDR —> Station Message Detail Recording 302
Software Upgrading 432
Special Carrier Access Code 100
Speed Dialling—Personal/System 113
Splitting, Call 178
Station Hunting —> Idle Extension Hunting 45
Station Message Detail Recording (SMDR) 302
Station Password Lock —> Extension PIN Lock 321
Station Programme Clear —> Extension Feature Clear 323
Station Speed Dialling —> Personal Speed Dialling 113
Subaddressing 249
Supervisory Feature 67
SVM Log 215
SVM —> Built-in Simplified Voice Message 213
System Configuration and Administration Features 391
System Configuration—Hardware 392
System Configuration—Software 394
System Data Control 413
System Speed Dialling 113

System Speed Dialling, TRS/Barring Override by 133

T

T1 Line Service 271
TAFAS —> Trunk Answer From Any Station 194
Tenant Service 400
Tenant-to-Tenant Call Block 401
Terminate 159
Terminated Hunting 45
Third Party Call Control 384
Three-party Conference (3PTY)—by ISDN 263
TIE Line Service 332
Time Service 405
Timed Reminder 326
Toll Restriction (TRS) 133
Toll Restriction (TRS)/Call Barring (Barring) 133
Tone, Audible 328
Tone, Call Waiting 130
Tone, Confirmation 330
Tone, Dial 328
Tones/Ring Tones 446
Transfer Recall 170
Transfer, Call 170
Transfer, One-touch 171
Transferring Features 170
TRS/Barring Level 134
TRS/Barring Override by System Speed Dialling 133
TRS/Barring —> Toll Restriction/Call Barring Features 133
Trunk Access 103
Trunk Answer From Any Station (TAFAS) 194
Trunk Busy Out 96
Trunk Call Features 89
Trunk Call Limitation 163
Trunk Group 396
Trunk Group Access 103
Trunk-to-Trunk Call Duration 163
Two-way Recording into the VPS 286

U

UCD —> Uniform Call Distribution 51
Unattended Conference 182
Uniform Call Distribution (UCD) 51
Upgrading Software 432
User-to-user Signalling Type 1 (UUS-1) 249

V

Verification Code Entry 144
Verification Code Personal Identification Number (PIN) 144
VIP Call 60
Virtual Private Network (VPN) 359
Virtual PS 300
VM —> Voice Mail Features 273
Voice Mail (VM) Group 273, 398
Voice Mail DPT (Digital) Integration 283
Voice Mail DTMF Integration 276
Voice Mail Features 273
Voice Mail, Centralised 375
Voice Message, Built-in Simplified (SVM) 213
Voice over Internet Protocol (VoIP) Network 356
VoIP —> Voice over Internet Protocol Network 356
VPN —> Virtual Private Network 359
VPS Data Control by the PBX 287

W

Walking COS 142
Walking COS Through DISA 202
Walking COS, DISA Automatic 203
Walking Extension 325
Walking Station —> Walking Extension 325
Whisper OHCA 132
Wireless XDP Parallel Mode 297
Wrap-up 64

X

XDP Parallel Mode, Wireless 297
XDP —> EXtra Device Port 392
XDP, Digital 165

Panasonic Communications Co., Ltd.
1-62, 4-chome, Minoshima, Hakata-ku, Fukuoka 812-8531, Japan

Copyright:
This material is copyrighted by Panasonic Communications Co., Ltd., and may be reproduced for internal use only. All other reproduction, in whole or in part, is prohibited without the written consent of Panasonic Communications Co., Ltd.

© 2005 Panasonic Communications Co., Ltd. All Rights Reserved.

PSQX3659VA KK0805BM3076