INSTRUCTION MANUAL

WaterTechw² pH8000 Sensor

partech

** This page is intentionally left blank **

Table of Contents

1 Foreword

The WaterTechw² family of sensors has been specifically designed for use with the 7300w² Monitor.

Measuring pH is a vital part of control systems throughout water, wastewater and process industries. In activated sludge plants, the biological process is greatly influenced by the acid or alkaline condition of the mixed liquor, on-line control is vital to maintain effluent quality. In effluent discharge regulations, pH is the most common water quality parameter, giving vital feedback on plant performance and protecting the environment from pollution events.

In sewage and industrial effluent treatment, pH control is vital for ensuring that pollutants are removed effectively. When the pH moves away from a neutral position the biological activity of the bacteria reduces, at less than 5pH or greater than 10pH then the activity ceases and the treatment system will start to breakdown. In combination with the 7300w² Monitor we provide the monitoring and control functionality to ensure that the control system remains functional and is carried out in the most cost effective manner.

pH monitoring and control also plays a vital role in the success of potable water treatment. If the water is acidic (lower than 7), lime, soda ash, or sodium hydroxide is added to raise the pH. Lime is commonly used for pH adjustment for municipal water, or at the start of a treatment plant for process water, as it is cheap, but it also increases the ionic load by raising the water hardness. Making the water slightly alkaline ensures that coagulation and flocculation processes work effectively and also helps to minimize the risk of lead being dissolved from lead pipes and lead solder in pipe fittings. Acid (HCl or H_2SO_4) may be added to alkaline waters in some circumstances to lower the pH. To ensure correct treatment, it is necessary to monitor as well as control the optimisation of the chemical dosing.

The WaterTechw² pH8000 sensor has been designed to provide highly reliable operation across the range of drinking water and wastewater applications. The flat faced electrode included the latest innovations in double junction reference with the ERP reference path. We also offer a version of the electrode that is designed to monitor pH in low conductivity (low ionic strength) applications.

WaterTechw² pH8000 Sensor

2 Introduction

2.1 Manual Conventions

All dimensions stated in this manual are in millimetres unless otherwise stated.

The manual has been written assuming the user has a basic knowledge of instrumentation and an understanding of the type of measurement being made. Training in the use of the 7300w² Monitor and sensors can be provided, please contact Partech for further information.

Icons have been used throughout this manual to draw your attention to precautions and useful notes.

They are categorised in the following way-

NOTES: General notes of interest to the user.

GENERAL CAUTION: Used where caution is required to prevent injury, damage, corruption of data, loss of calibration or invalidation of warranty etc.

INSTALLATION NOTES: General installation notes of interest to the installer.

ELECTRICAL CAUTION: Used where there is a danger of electric shock to the installer or end user, or where caution is required to prevent damage to the instrument.

MAINTENANCE NOTES: Used to highlight recommended maintenance procedures and help with fault finding.

ENVIRONMENTAL NOTES: General notes on environmental issues, waste and disposal.

2.2 WaterWatch² Trademark

WaterWatchw² is the family name for the w² range of monitors and sensors. Sensors and instruments designed for specific use with the 7300w² Monitor will be suffixed with the w² trademark.

2.3 Scope of Manual

This manual describes the installation, configuration, testing and operation of the WaterTechw² pH8000 Sensor. Please refer to 7300w² Monitor manual for standard functions of the 7300w² Monitor.

2.4 External Sensors

External sensors refers to any sensors, expansion modules or instruments connected externally to the 7300w² Monitor.

3 Safety Precautions

3.1 General

Read the safety precautions carefully.

Check the delivery of your WaterTechw² Sensor for damage. Any damage should be reported to your supplier as soon as possible.

Use care when unpacking the sensor. **NEVER** use sharp instruments to open the packaging, as this can cause damage to the sensor or cable.

Only use accessories specifically manufactured by Partech for use with this sensor.

Read the operating instructions carefully before installing and operating this sensor.

Keep the cable connections dry and free from contamination during installation.

Keep the sensor away from high voltage cables.

3.2 Electrical installation

Only suitably qualified personnel or competent person may install, operate or repair this equipment. The installer must ensure all electrical installation comply with local wiring regulations and standards (refer to BS7671 for UK installations).

Please check the sensor has been terminated correctly. Incorrect termination may causes damage to the sensor or monitor.

The WaterWatch² family of sensors are designed exclusively for use with the 7300w² Monitor. DO NOT connect to other monitors.

Sensors need to be correctly addressed to the monitor before use. Please read the *Sensor Configuration* section of this manual for full details.

3.3 Operating

Because these sensors have a wide range of applications, users must acquire the appropriate knowledge to use these sensors in their specific application.

Partech are always available to provide advice and assistance in your application. Please contact Partech for further information.

These sensors must be correctly calibrated before use. Please read the *Calibration* section of this manual for full details of calibration procedures.

3.4 Service and Maintenance

Before maintenance, this equipment must be isolated or disconnected from HAZARDOUS LIVE voltages before access.

Maintenance instructions for the WaterTechw² pH8000 Sensor should be carried out as specified in this instruction manual. Failure to carry out regular maintenance could invalidate the Warranty.

Services and repairs must be carried out by a Partech engineer. Partech can provide a service contract for your system. Please ask for details.

3.5 End of Life Disposal

Equipment should be recycled according to local regulations.

Any calibration solutions should be disposed of as described in the Manufacture Safety Data Sheet accompanied with the calibration solution.

Partech can provide recycling and disposal of your old Partech equipment, and may also provide the same service for other manufactures equipment when replaced with Partech equipment.

Partech may provide a trade-in for old Partech equipment when upgrading your system. Please contact us for further information.

4 The Sensor and Installation

Whilst every attempt has been made to ensure that these instructions are correct, common sense and good engineering practice should always be used, as every installation can present a new set of challenges and difficulties. If you are in any doubt please contact Partech or your local distributor for further information.

4.1 The WaterTechw² Sensor

The pH8000 sensor consists of an electronic assembly and a “consumable” replaceable part.

The WaterTechw² pH8000 Sensor has been designed to provide highly reliable pH and Temperature measurements. The sensor uses a flat surfaced electrode which includes an extended reference path, these features combine to provide an extremely robust pH measurement, suitable for use in surface water, waste water and drinking water applications.

The electrode uses field proven flat surface, self-cleaning technology. The reference system is enhanced by the Extended Path Reference (ERP) design which provides a complex path to protect the reference in the presence of interacting ions such as proteins, silver and sulphides.

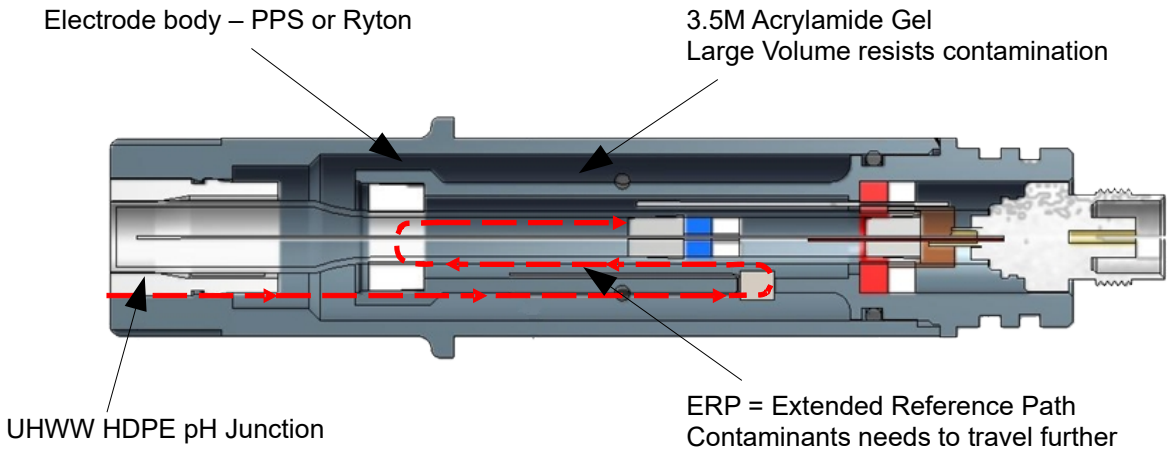

4.2 Flowcell Assembly

Our flowcell assemblies are intended for applications where it is not possible to gain direct access to the sample using a dip sensor, these are typically applications in drinking water and final effluent

discharge.

4.3 Dip Housing

The Dip housing has been specifically designed for use in open channels and easy access points. Mounting shafts are available in a variety of lengths to suit any application. They range from 0.5 to 3.0 metre lengths. A range of mounting bracket options are also available. See *Mounting Options* section of this manual for full details. The sensor connects directly to the 7300w² Monitor.

For installation in applications where gross fouling is anticipated we recommend that the sensor is installed using our specially designed mounting system, with a flexible joint in the mounting shaft. The flexible joint moves the sensor in the process, reducing bio-fouling and allowing rags to fall away from the assembly. This motion is similar to that achieved by using a floating ball assembly, with the added advantage of placing the sensor below the surface of the liquid.

WaterTechw² pH8000 Dip Sensor

5 Mechanical Installation

Reliable accurate measurement from any instrument can only be achieved by correct installation of the measuring device; in the case of the WaterTechw² pH8000 Sensor, this is particularly important. If you are in any doubt contact Partech or your local distributor for advice.

Below are some points that should be considered before starting to install the sensor, or in the event an installed sensor gives unreliable measurements-

- Ensure that the sensor is immersed deeply enough into the sample.
- The sensor should be mounted in such a way as to allow easy access for calibration and maintenance. It should be possible to remove the sensor from the process without the need to shut the process down.
- The sensor must be monitoring a sample of the process that is representative of the whole process.
- To allow a single technician to calibrate and maintain the system the sensor should be placed within sight of the 7300w² Monitor. Although cable runs of up to 100 metres are possible operational problems can be caused.
- When possible, angle the sensor so that it is pointing down stream, this will allow any “ragging” to be removed by the flow past the sensor.
- Do not install where there is a likelihood of freezing.

5.1.1 Mounting Options – Flowcell assembly

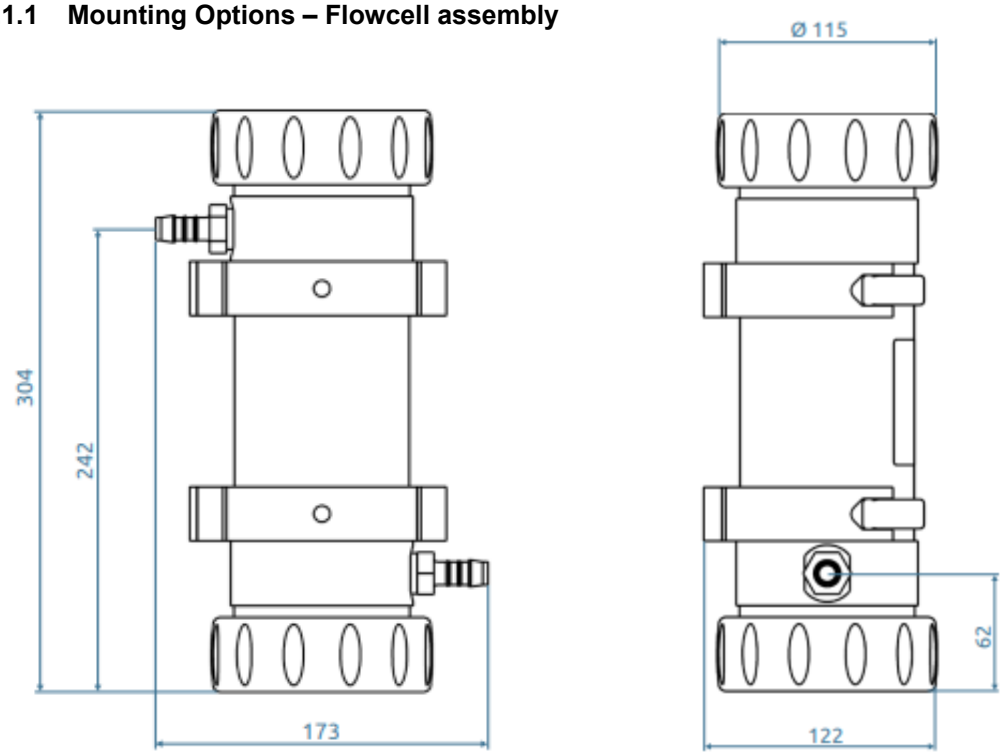

The inlet and return hose tails require a 12mm internal diameter hose. Alternatively, user fittings and hoses can be attached by removing the hose tails to reveal a 1/2” BSPT thread.

The flowcell has been designed to take a small positive pressure (1Bar) on the inlet, however the outlet from the unit is normally fed to an open drain. We advise using an open drain, as this allows visual inspection to confirm a flow is present.

5.1.2 Mounting Options – Dip Housing

Partech offer a range of mounting brackets for the installation of the WaterTechw² pH8000 sensor, which will allow the user to apply the sensor in a wide variety of locations. Drawings of the brackets are shown in the relevant “Optional Accessories” sections of this manual. When assessing mounting options, attention should be paid to the accessibility of the sensor for calibration and maintenance, stability of the sensor in the flow conditions present on site and to ensuring the sensor is fully submerged at all times.

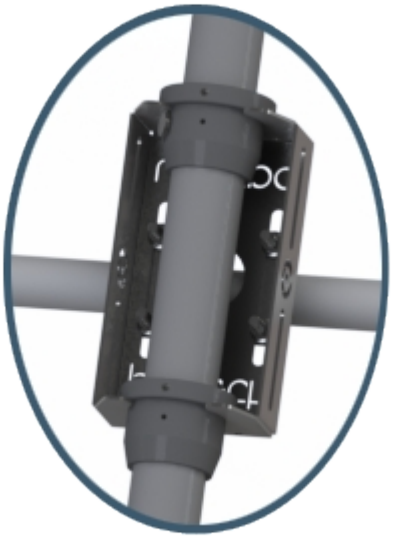

5.1.3 Mounting Options – Dip Housing Shaft Mount

Mounting shaft fitting can be used to allows the WaterTechw² pH8000 Sensor to be fitted to a number of mounting accessories. Partech supply mounting shafts manufactured from 2” nominal bore grey ABS pipe in 1.0, 2.0 and 3.0 metre lengths. Whilst other lengths can be provided as special orders, generally standard lengths will satisfy most requirements. It should be noted that sensors with long mounting shafts are difficult to move safely and can present problems with calibration and maintenance, shaft lengths should be kept to a minimum where possible.

5.1.4 Mounting Options – Dip Housing Handrail and Wall Brackets

The mounting shafts described above need to be attached to the structure of the tank or flow channel where measurement is required. The mounting shaft sits inside the mounting bracket and is located using locking collars. To remove the mounting shaft, remove the locking thumb screw and lift the shaft from the bracket.

Care should be taken to ensure that the sensor can be reached from the walkway to allow removal for calibration and maintenance.

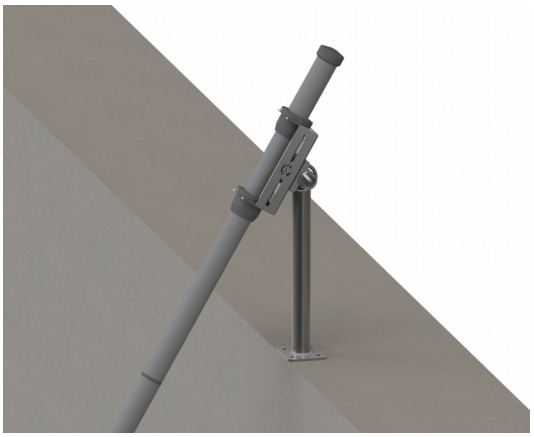

5.1.5 Customer Supplied Brackets

When creating brackets to mount the WaterTechw² pH8000 Sensor, care should be taken to ensure that the following guidelines are observed:

- The bracket must be strong enough to support the sensor with minimum movement when installed into the sample.
- The sensor should be fitted by clamping around the sensor body or suspended by the cable.
- Consideration should be given to enable simple removal and replacement of the sensor for inspection, calibration and servicing to be carried out.

5.2 Electrical Installation

5.2.1 Electrical Installation – Dip or ModTechw² Interface to 7300w²

The following instructions detail the connection of the ModTechw² Interface box or the Dip senors to the 7300w² Monitor.

Unscrew the two cover screws on the lower panel of the 7300w² Monitor to reveal the Terminals. Each terminal strip is labelled as illustrated below. (This equipment must be isolated or disconnected from HAZARDOUS LIVE voltages before access). Refer to the 7300w² Monitor user manual for full description of all the terminals within the monitor.

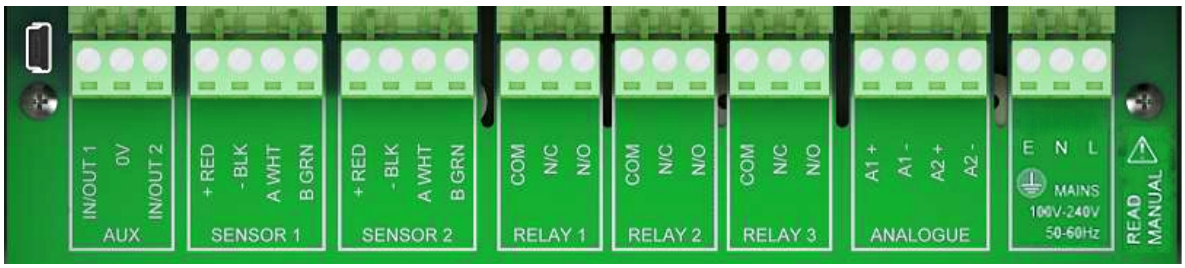

The maximum size wire that can be terminated is 2.5mm² CSA. All the connections are via removable Plug/Socket terminals. To disengage the terminal strip, simply pull down to release.

5.2.2 Sensor Connections

When routing the sensor cables, please ensure the cable is separated from any mains cables. Although the Waterwatch² sensors have a high resistance to interference, separation of mains and data cables is always good practice and should be followed where practical.

All Waterwatch² sensors and Expansion Boxes communicate with the monitor using the ModTechw² Protocol. This protocol is a modified Modbus Protocol and has been specifically developed to take advantage of the advanced features and diagnostics designed into the w² range of sensors.

Note: These sensors can **NOT** be used with other monitors that are not included in the w² family.

All sensors within the w² family of instruments are connected to the 7300w² Monitor using the same 4 wire configuration.

- RED and BLACK wires provide the 12VDC supply to the sensor and the communication ground.
- WHITE and GREEN provide data communication.

A maximum of two sensors can be directly connected to the standard 7300w² Monitor, however additional sensors can be added using the optional Expansion Boxes available separately.

Remove the 4-way connector from the 7300w² Monitor by pulling downwards to disconnect for easy access to the connections. Connect the sensor cores as follows:

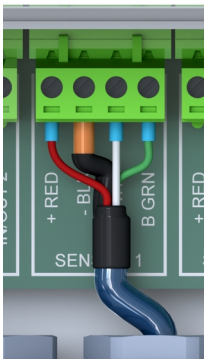

(Terminals from left to right on the 4 way connector)

Term 1 (Left)	-	RED (+12V)
Term 2	-	Black (0V)
Term 3	-	White (Data A)
Term 4 (Right)	-	Green (Data B)

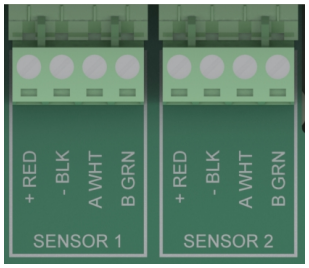

Always connect the screen drain wire with the Black (Term 2). Illustration Left shows drain wire and Black wire connected together, and covered in Black Heat shrink.

Always use Bootlace ferrules when terminating the sensors to ensure a good connection to the terminals.

5.2.3 Extending Sensor Cables

Sensors are usually supplied with 10M cables (longer cables can be provided by request). These cables can be extended to a maximum length of 100M. To ensure optimum performance, we advise the use of Partech ModTechw² cable for extensions. Partech can supply Junction Boxes to allow for easy termination of cable extensions. These should be used on all installations where the cable length from the sensor to the monitor exceeds 20M (Partech Junction Boxes include on-board filtering for long cable lengths). Junction Boxes are also useful for local connection of sensors close to the sample point. This allows for easy replacement of sensors without the need to pull back cables to the monitor. The Junction Box has an on-board terminator switch that can be activated to terminate the network if the sensor is to be removed for long periods.

When joining cables, ensure the connection is fully waterproof. Any moisture ingress can effect the performance of the sensor and monitor. Always ensure the screen is continued when making joints.

ModTechw² Cable specification:

- 2 Twisted Pair: Red/Black (Power) and Green/White (Data) with Screen and Drain wire
- Cores 24AWG (0,22mm²) 7 x 0,20mm
- Outer Insulation: PUR Polyurethane Blue (RAL5003), Diameter - 5mmØ

6 Sensor Configuration

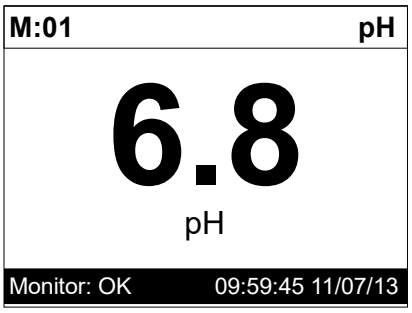

Before attempting to configure the sensor, please read the user manual that came with your monitor. The monitor manual will introduce you to the basic set-up of the monitor, and will familiarise you with the monitor menu structure and buttons.

The monitor leaves the factory with no sensors pre-installed.

Assuming the monitor has been physically connected to a sensor, the next step is to register and configure the sensor before any measurements can be made. A single sensor may provide one or more measurements. We advise only connecting one sensor at a time. Once the first sensor has been registered, connect the second and register again. Repeat for any additional sensors.

All sensors must be registered to the monitor in this way, even if they are different types.

Please note that live measurements are not available until the Sensor Configuration stage has been completed.

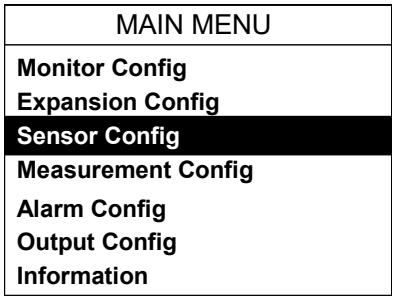

6.1 Sensor Config

From the MAIN MENU screen, select SENSOR CONFIG by pressing ▼, and press OK to accept.

6.2 Sensor Status

This option allows the user to review the current status of the 8 sensor channels, these will all be set to disabled until a sensor is added.

Once a sensor has been installed the display will be updated to indicate the sensor type installed and it's status.

6.3 Add Sensor

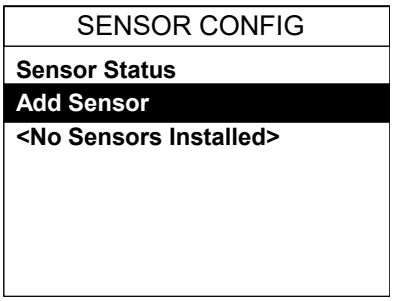

1. From the MAIN MENU screen, select SENSOR CONFIG by pressing ▼ and press OK.
2. The SENSOR MENU should be displayed. Press ▼ to highlight ADD SENSOR, and press OK.
3. The Monitor will now search all possible addresses (0 to 240) to find any attached sensors. During the search, any sensors found will be displayed momentary before continuing with the search. Default sensor address for WaterTechw² pH8000 = 18
4. Once the search is complete, the Monitor will display a list of sensors found. Each sensor will be automatically allocated a new number from S:01 to S:08.
5. Repeat the above process to install a second, third or more sensors. A total of 8 sensors are possible (expansion box may be required to add additional sensors).
6. Sensor addition is now complete.
7. If a single or multiple sensors have been found the MENU can be pressed to escape from continuing the search.

6.4 S:0x WaterTechw² pH8000

Once the sensor has been added and registered, the monitor will provide a list of functions specific to the sensor. Press ▲ or ▼ to select the sensor and press OK. The CONFIG MENU will display a list of sensor functions.

SENSOR CONFIG
Sensor Status
Add Sensor
S:01 WaterTechw² pH8000

6.4.1 S:0x Info

This function provides a range of diagnostic information that may be requested by Partech for fault finding Press the OK key to access the information sub-menu.

Only the first two pages of this sub-menu are shown as they are deemed the most relevant for initial diagnosis.

S:01 CONFIG
S:01 Info
S:01 Remove
S:01 Modbus Address

The first page of this information menu option shows the sensor type, Modbus address and the sensor serial number. Press the ▲ key to access the next page.

S:01 INFO	
Type	**WaterTechw² pH8000**
SN	**423566**
Address	**18**
Status	**OK**
Press OK or MENU to Exit	**Page 1/5**

The second page displays the installed firmware version numbers and the factory date. Press the MENU key to escape from this sub-menu.

This will return us the the Sensor Config. Menu again.

S:01 INFO	
Sensor F/W	**v1.01.6**
Common F/W	**v1.05.66**
Common 2 F/W	**N/A**
Factory Date	**11/07/2013 10:29**
Press OK or MENU to Exit	**Page 2/5**

6.4.2 S:0x Remove

⚠ This allows the sensor to be removed for re-configuration of the monitor or if a sensor has been added on error. If a sensor has been replaced with a new sensors, the old sensor must be removed, and the new sensor installed.

You will be prompted with *'Are you sure?'* before the sensor is removed. Press OK to accept and remove.

S:01 CONFIG
S:01 Info
S:01 Remove
S:01 Modbus Address

6.4.3 S:0x Modbus Address

All Waterwatch² sensors and Expansion Boxes communicate with the monitor using the ModTechw² Protocol. This protocol is a modified Modbus Protocol, and has been specifically developed to take advantage of the advanced features and diagnostics designed into the w² range of sensors. The term “Modbus Address” has been used as a generic term to describe the address of each sensor and Expansion Box on the Modtechw² network.

S:01 CONFIG
S:01 Info
S:01 Remove
S:01 Modbus Address

Once the first sensor has been configured, it will be necessary to change the Modbus Address before connecting a second sensor, if they are of the same type. If only one sensor is to be connected to the

7300w² monitor or several sensors of different types, it is not necessary to change the Modbus Address.

All sensors and Expansion Boxes have default addresses starting from address 10 to 240, leaving addresses 1-9 free for user configuration. It is good practice to allocate Sensors 1-8 to Modbus Address 1–8.

The following describes how to change the Modbus address of a sensor:

S:01 MODBUS ADDRESS
18
Use ←↓↑→ to set value
Press OK to accept
Press MENU to cancel

1. From the SENSOR CONFIG screen, use ▲ or ▼ to highlight the sensor to be re-addressed i.e. “S:01 WaterTechw² pH8000”, then press OK to select.
2. Select MODBUS ADDRESS and press OK to select.
3. Press ◀ or ▶ to move the cursor below the digit to be changed.
4. Press ▲ or ▼ to increase or decrease the digit.
5. Press OK to accept.

Once the Modbus address has been changed, you are then free to configure the next sensor. Note: The Modbus address is stored in the sensor not the monitor.

7 Measurement Configuration

The monitor leaves the factory without any measurements configured. Measurements can only be added after installing the relevant sensor(s).

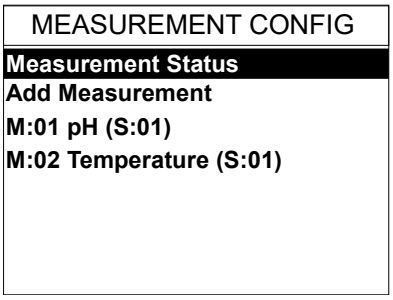

Once the sensor(s) have been registered with the monitor and installed, the measurements are then available to be configured if required.

The screen shot to the left shows the default configuration after the installation of the WaterTechw² pH8000 sensor on a single sensor configuration. There are two default measurements:

M:01 = pH (S:01)

M:02 = Temperature (S:01)

If a measurement has been removed or the temperature measurement, for example, is no longer required then the following descriptions should be followed. Otherwise measurement configuration is not normally addressed during basic systems commissioning.

7.1 Measurement Status

This option allows the user to review the current status of the 16 measurement channels. Configured measurements will show the type of measurement and description and serial number of the sensor providing the measurement. If only one measurement is configured, the remaining fifteen measurement allocations will display “DISABLED”.

7.2 Measurement Config

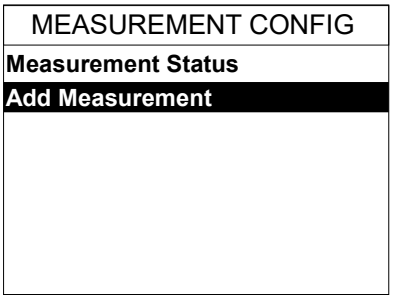

From the MAIN MENU screen, select MEASUREMENT CONFIG using to highlight and press .

7.2.1 Add Measurement

1. From the MAIN MENU screen, select MEASUREMENT CONFIG by pressing or , and press . Note that the screenshot on the left shows the MEASUREMENT CONFIG display with both pH and temperature measurements removed.

2. The MEASUREMENT MENU should be displayed. Press to highlight ADD MEASUREMENT, and press .

3. All available measurements will be displayed in a list. Press or to highlight the first measurement to be loaded.

4. Press to select the measurement. Repeat the process if more measurements are required.

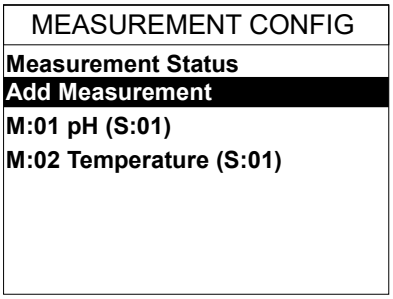

5. Each measurement will be allocated a measurement number from M01 – M16. A total of 16 measurements may be displayed.

   N.B. The measurement number has no relevance to the sensor number.

6. Press to return back to the display screen. The first configured measurements should now be displayed.

The Measurement Menu will list all configured measurements in order M:01 to M:16 the list will also indicate the sensor number that is delivering the signal for the measurement

7.3 Measurement Menu pH8000

Selecting a measurement channel will reveal a new sub-menu associated with that measurement. In **MEASUREMENT CONFIG** press ▼ to highlight the required measurement and press OK.

MEASUREMENT CONFIG
Measurement Status
Add Measurement
M:01 pH (S:01)
M:02 Temperature (S:01)

The sub-menu for **pH** is as follows:

M:01 CONFIG
M:01 Info
M:01 Title
M:01 Units
M:01 Set Cal Low (4pH)
M:01 Set Cal Mid (7pH)
M:01 Set Cal High (10pH)
M:01 Calibration Mode

7.3.1 M:0x Info *(pH)*

This option provides additional information on the measurement. This information will only be required if a problem exists with the instrument performance.

7.3.2 M:0x Title *(pH)*

This allows the title of the measurement to be changed from it's default, the measurement title is used in measurement mode to identify the measured value. A selection of standard terms are available along with a 'User Defined' option that can be adjusted to suit your requirements. For example this could be changed to 'MLSS – Lane 1'. The maximum number of characters is 20.

7.3.3 M:0x Units *(pH)*

This allows the units of the measurement to be changed from it's default, the measurement units are used in measurement mode. A selection of standard terms are available along with a 'User Defined' option that can be adjusted to suit your requirements. The maximum number of characters is 4. The default is “pH”.

7.3.4 M:0x Set Cal Low *(4pH)*

To perform Calibration of sensor. See the calibration section of this manual for full details.

7.3.5 M:0x Set Cal Mid *(7pH)*

To perform Calibration of sensor. See the calibration section of this manual for full details.

7.3.6 M:0x Set Cal High *(10pH)*

To perform Calibration of sensor. See the calibration section of this manual for full details.

7.3.7 M:0x Calibration Mode *(pH)*

Calibration can be performed as 2 point or 3 point calibration. This option selects the method required. See the calibration section of this manual for full details.

7.3.8 Averaging *(pH)*

This allows the user to impose averaging on the measured value, this is used to reduce the speed of reaction to the process changes. The following values are available for the user to select:

Damping Rate	Response Time (Seconds)	Typical Use
Instant	0.2s	
Very Fast	1s	Default
Fast	10s	
Medium	30s	
Slow	1m	
Very Slow	2m	

AVERAGING
Instant (0.2 second)
Very Fast (1 second) ✓
Fast (10 seconds)
Medium (30 seconds)
Slow (1 minute)
Very Slow (2 minutes)

7.3.9 Remove *(pH)*

If a measurement is no longer required, the measurement configuration can be removed from the 7300w² monitor in the following way.

1. From the MEASURMENT CONFIG screen, use ▲ or ▼ to highlight the measurement to be removed i.e. “M:01 pH(S:01)”, then press OK to select.
2. Select REMOVE and press OK to select.
3. Screen will display “Are you sure?”. Press OK to remove or MENU to exit without removing.

Once removed, any Alarms or Analogue outputs configured to the measurement will also be removed.

7.3.10 M:0x Display Position *(pH)*

Display Position allows two measurement to swap places, to allow the user to re-arrange the display as required. The display position refers to the M:0# number allocated to the measurement. The screen will always display the measurements in order from M:01 to M:16.

To swap measurements, use the DISPLAY POSITION menu.

The example below swaps measurement M:01 with M:03:

1. From the MEASUREMENT CONFIG screen, use ▲ or ▼ to highlight the measurement to be moved i.e. “M:01 pH(S:01)”, then press OK to select.
2. Select DISPLAY POSITION using ▲ or ▼ and press OK to select.
3. The current display position will be shown, e.g. 1 for M:01 pH(S:01).
4. Press ◀ or ▶ to move the cursor below the digit to be changed.
5. Press ▲ or ▼ to increase or decrease the digit to the desired new position (e.g. 3)
6. Press OK to accept. Measurement M:01 will now become Measurement M:03, and the measurement registered as M:03 will now become measurement M:01.
7. Note: any alarms or analogue outputs registered to a specific measurement will also be updated to the new display position (it is not necessary to re-configure alarms or analogues).

M:01 CONFIG
M:01 Set Cal Mid (7pH)
M:01 Set Cal High (10pH)
M:01 Calibration Mode
M:01 Averaging
M:01 Remove
M:01 Display Position
M:01 Restore Defaults

7.3.11 M:0x Restore Defaults

This option restores the measurement configurations back to the factory default settings.

7.4 Measurement Menu Temperature

The following measurement menus are available once the Temperature measurement is installed.

M:02 CONFIG
M:02 Info
M:02 Title
M:02 Set Cal (25.0 °C)
M:02 Averaging
M:02 Remove
M:02 Display Position
M:02 Restore Defaults

7.4.1 M:0x Info *(Temp)*

This option provides additional information on the measurement. This information will only be required if a problem exists with the instrument performance.

7.4.2 M:0x Title *(Temp)*

This allows the title of the measurement to be changed from it's default, the measurement title is used in measurement mode to identify the measured value. A selection of standard terms are available along with a 'User Defined' option that can be adjusted to suit your requirements. For example this could be changed to 'MLSS – Lane 1'. The maximum number of characters is 20.

7.4.3 M:0x Set Cal (25.0°C) *(Temp)*

To perform Calibration of sensor. See the calibration section of this manual for full details.

7.4.4 Averaging *(Temp)*

This allows the user to impose averaging on the measured value. This is used to reduce the speed of reaction to the process changes. Default is 1 second, this should be sufficient for most applications.

7.4.5 Remove *(Temp)*

If a measurement is no longer required, the measurement configuration can be removed from the 7300w² monitor in the following way.

1. From the MEASURMENT CONFIG screen, use ▲ or ▼ to highlight the measurement to be removed i.e. “M:01 Temperature(S:01)”, then press OK to select.
2. Select REMOVE and press OK to select.
3. Screen will display “Are you sure?”. Press OK to remove or MENU to exit without removing.

Once removed, any Alarms or Analogue outputs configured to the measurement will also be removed.

7.4.6 M:0x Display Position *(Temp)*

Display Position allows two measurement to swap places, to allow the user to re-arrange the display as required. The display position refers to the M:0# number allocated to the measurement. The screen will always display the measurements in order from M:01 to M:16.

To swap measurements, use the DISPLAY POSITION menu.

The example below swaps measurement M:01 with M:03:

1. From the MEASUREMENT CONFIG screen, use ▲ or ▼ to highlight the measurement to be moved i.e. “M:01 Temperature(S:01)”, then press OK to select.
2. Select DISPLAY POSITION using ▲ or ▼ and press OK to select.
3. The current display position will be shown, e.g. 1 for M:01 temperature (S:01).
4. Press ◀ or ▶ to move the cursor below the digit to be changed.
5. Press ▲ or ▼ to increase or decrease the digit to the desired new position (e.g. 3)
6. Press OK to accept. Measurement M:01 will now become Measurement M:03, and the measurement registered as M:03 will now become measurement M:01.
7. Note: any alarms or analogue outputs registered to a specific measurement will also be updated to the new display position (it is not necessary to re-configure alarms or analogues).

7.4.7 M:0x Restore Defaults

This option restores the measurement configurations back to the factory default settings.

8 Calibration

Once the measurement has been added and registered, the monitor will provide a list of functions specific to the measurement. Press ▲ or ▼ to select the measurement in the MEASUREMENT MENU and press OK . The CONFIG MENU will display a list of measurement functions including the Calibrate function.

Press ▲ or ▼ to select the calibrate function and press OK .

8.1 pH Calibration Modes

M:01 CALIBRATION MODE	
Two Point Low Calibration	
Two Point High Calibration	
Three Point Calibration	✓

pH sensor calibration can be performed in three ways (modes):

- 3 Point Calibration (4pH 7pH and 10pH) – *For General Application.*
- 2 Point Calibration Low (4pH and 7pH) – *For Acidic Applications.*
- 2 Point Calibration High (7pH and 10pH) – *For Alkali Applications.*

To change the calibration mode, follow the steps below:

1. From the MAIN MENU screen, select MEASUREMENT CONFIG by pressing ▼ or ▲ , and press OK.
2. Select the measurement to be calibrated i.e. “M:01 pH(S:01)” by pressing ▼ or ▲ , and press OK.
3. Select “CALIBRATION MODE” by pressing ▼ or ▲ , and press OK.
4. Select the calibration mode required by pressing ▼ or ▲ to select, and press OK.
5. A tick will appear next to the chosen mode.
6. Pressing MENU will return back to the CONFIG menu. Depending on the mode selected, a combination of “SET CAL LOW”, “SET CAL MID” and “SET CAL HIGH”, or all three will be displayed.

8.2 pH Calibration LOW, MID and HIGH

Calibration for Low (4pH), Mid (7pH) and High (10pH) is the same, with the exception of instruction 5 (see below). The instructions below are for Low (4pH) calibration. Follow these instruction for Mid and High, but substitute the 4pH reference for 7pH or 10pH.

M:01 CONFIG
M:01 Info
M:01 Title
M:01 Units
M:01 Set Cal Low (4pH)
M:01 Set Cal Mid (7pH)
M:01 Set Cal High (10pH)
M:01 Calibration Mode

1. From the MAIN MENU screen, select MEASUREMENT CONFIG by pressing ▼ or ▲ , and press OK.
2. Select the measurement to be calibrated i.e. “M:01 pH(S:01)” by pressing ▼ or ▲ , and press OK.
3. Select “SET CAL LOW” by pressing ▼ or ▲ , and press OK.
4. CALIBRATE SENSOR screen will confirm calibration is about to start. Press OK .

M:01 CALIBRATE
CALIBRATE MEASUREMENT **M:01 pH** **S:01 WaterTechw² pH8000** **SN:400001** **Last Calibrated: 01/01/1970 00:00:00** **By: System** **Press OK to contiue or MENU to Exit**

5. For the Low & High (4pH & 10pH) calibration, there is an option to change the standard using the arrow buttons. It is advised to retain the default standards and press OK to continue.

M:01 SET CAL LOW (4pH)

4.00 pH

Use ←↓↑→ to set value

Press OK to accept

Press MENU to cancel

6. Place the sensor in a 4pH buffer solution. Allow the measurement to settle. Once the measurement is stable, Press OK to accept. The value will be stored.
7. When the Calibration is complete, the monitor will display "Calibration Successful". Press OK to return back to the CONFIG menu.
8. Repeat for Mid and High Calibration.

M:01 SET CAL LOW (4.00pH)

Insert sensor into calibration solution and wait for measurement to stabilise

3.90 pH

Press OK to contiue or MENU to Exit

8.3 Temperature Calibration

Calibration of the temperature sensor is a single point calibration. A temperature measurement is required to provided an accurate calculation of the pH measurement, however, this measurement is provided to the user as an indication of the samples temperature. Accuracy of this measurement < ±1°C. For highly accurate temperature measurements, we would suggest a dedicated temperature sensor.

1. From the MAIN MENU screen, select MEASUREMENT CONFIG by pressing ▼ or ▲, and press OK.
2. Select the "Temperature (S:01)" by pressing ▼ or ▲, and press OK.
3. Select "SET CAL (25.0°C) by pressing ▼ or ▲, and press OK.
4. SET CAL screen will confirm calibration is about to start. Press OK

MEASUREMENT CONFIG

Measurement Status
Add Measurement
M:01 pH (S:01)
M:02 Temperature (S:01)

M:02 SET CAL (25.0°C)

CALIBRATE MEASUREMENT
M:02 Temperature
S:01 WaterTechw² pH8000
SN: 400001
Last Calibrated: 01/01/2013 00:00:00
By:

Press OK to contiue or MENU to Exit

5. It is advised to calibrate to 25°C for best results, however, this screen allows the calibration temperature to be changed to a user value. Use ▼ or ▲ to change the calibration value, and press OK to accept.

M:02 SET CAL (25.0°C)

25.0 °C

Use ←↓↑→ to set value

Press OK to accept

Press MENU to cancel

6. Place the temperature sensor into a stable temperature medium to the temperature specified above. Allow the measurement to stabilise. Once the measurement is stable, Press OK to accept.
7. The calibration value will be stored in the sensor.
8. Calibration complete.

M:02 SET CAL (25.0°C)

Insert sensor into calibration solution and wait for measurement to stabilise

24.5 °C

Press OK to contiue or MENU to Exit

9 Maintenance

9.1 General cleaning

The glass pH measurement surface in the pH sensor must be kept as clean as possible. If dirty, wash the glass pH measurement surface in soapy water and rinse before storage or use. If this is not enough, soak the sensor in a special cleansing solution overnight, then rinse before use. As far as possible, avoid any contact between the glass surface and oil, hydrocarbons or colloids.

9.2 Inspection

The WaterTechw² pH8000 Sensor should be periodically inspected and cleaned as described above.

10 Optional Accessories

Partech have a full range of brackets and mounting shafts for a number of application. Please contact Partech for details.

Example of our standard hand rail bracket

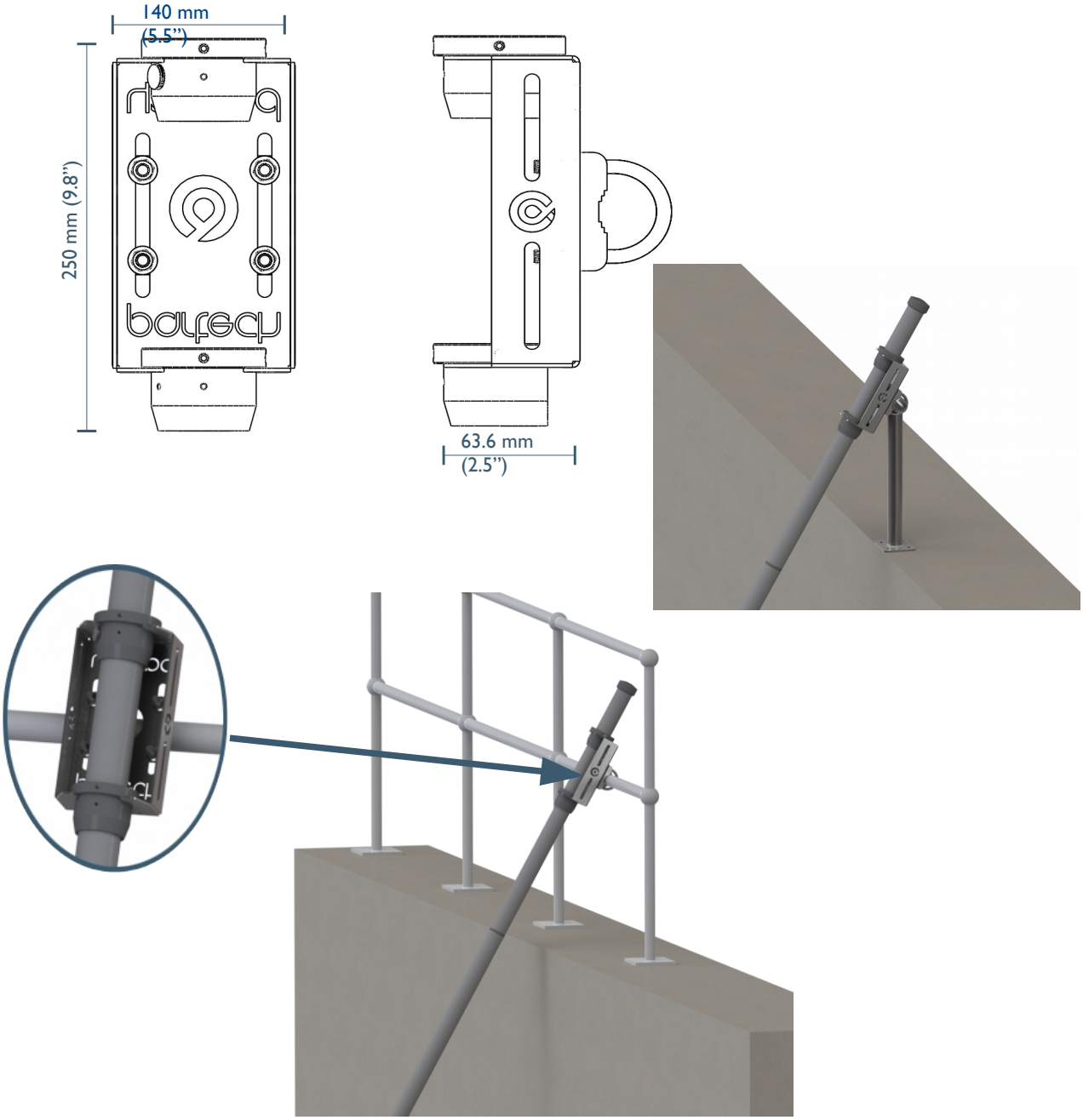

11 Technical Support

Technical Support is available by phone, fax, or email, the details of which are shown below.

- Phone: +44 (0) 1726 879800
- Fax: +44 (0) 1726 879801
- Email: techsupport@partech.co.uk
- Website: www.partech.co.uk

To enable us to provide quick and accurate technical support please have the following information ready when you contact us:

- Serial Number or original purchase details.
- Sensor Type, and Serial Number.
- Application details.
- Description of fault.
- Digital photos can also be useful to determine correct installation and suitability to the application.

11.1 Returning Equipment for Repair

If equipment needs to be returned to Partech for repair or service the following address should be used:

SERVICE DEPARTMENT
PARTECH INSTRUMENTS
ROCKHILL BUSINESS PARK
HIGHER BUGLE
ST AUSTELL
CORNWALL
PL26 8RA
UNITED KINGDOM

Please include the following information with the returned equipment. Also ensure that sensor is clean and adequately protected for transportation (Advice on packing can be provided by our service department).

- Contact name and phone number of person authorising the repair
- Site details including application sample point
- Return address for equipment
- Description of fault or service required
- Any special safety precautions because of nature of application

12 Technical Specification

12.1 Physical

Dimensions.....60 mm Diameter x 255 mm long
Weight.....0.35 kg (inc. 10 metres of cable)
Protection Class.....IP68
Enclosure Material.....Black PVC with Nylon Cable Gland
Electrode Body.....PPS (Ryton)
Cable Length.....10 metres Standard, 100 metres Max

12.2 Environmental Data

Operating Temperatures.....0 to 70°C
Storage Temperatures.....0 to 70°C
Location.....Indoor/Outdoor

12.3 Electrical

Supply.....12VDC from 7300w² Monitor
Sensor Communication.....Partech w² Protocol

12.4 Service Replacement

Consumable Part.....Electrode Replacement PN224459

12.5 Measurement

WaterTechw² Measurement	***Range***	***Accuracy***	***Measurement Principle***
pH	*0 - 14 pH*	*±0.05pH*	*Combined Electrode (pH/Reference), Ag,AgCl ref Gel Electrolyte (Acrylamide), Double Junction ERP Reference*
Temperature	*0 - 70°C*	*< ±0.5°C*	*Integrated circuit temperature transducer*

partech

Partech Instruments
Rockhill Business Park, Higher Bugle, St Austell, Cornwall, PL26 8RA, UK
Tel: +44(0)1726 879800
Email: info@partech.co.uk Web: www.partech.co.uk