Strainer *Y- Type*

JOKWANG

Materials (Standard)

No	Part	JST-YT12[JKB]	JST-YT11[FSF-S]	JST-YF11[FST-F]	JST-YF21[SST]
a	Body	Bronze	Cast Iron		Cast Steel
b	Cap	Forged brass		Cast Iron	Cast Steel
c	Screen	Stainless steel (for reference see filtering metal)			
d	Gasket	Non asbestos			
e	Plug			Malleable iron	Steel
f	Bolt			Steel	
Connection		PT Screwed		10K FF flange	20K RF flange
Working Pressure		Max. 10kgf/ cm²{1.0MPa}			Max. 20kgf/ cm²{2.0MPa}
Working Temperature		Max 200˚c			Max 300˚c
Working Fluid		air, steam, water and/ or noncorrosive media			

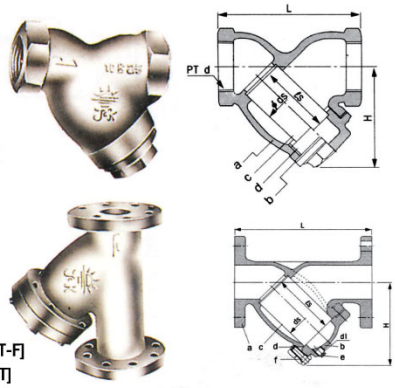

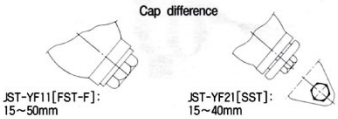

model JST-YT12, JST-Y11[JKB, FST-S] screwed

Dimensions

Model	Size mm(inch) / Part	15(1/2")	20(3/4")	25(1")	32(1 1/4")	40(1 1/2")	50(2")
	d	PT 1/2"	PT 3/4"	PT 1"	PT 1 1/4"	PT 1 1/2"	PT 2"
	l	80	80	94	114	140	152
JKB	h	60	60	75	85	95	105
	ds	23	23	28	38	46	51
	ℓs	34.3	34.3	49	63	66	75.5
	Wt (kg)	0.5	0.5	1.4	1.4	2.1	2.8
	d	PT1/2"	PT3/4"	PT 1 1/4"	PT 1 1/4"	PT 1 1/2"	PT 2"
	l	80	94	114	140	152	174
FST-S	h	60	75	85	95	105	115
	ds	23	28	38	46	51	59
	ℓs	34.3	49	63	66	75.5	87.5
	Wt (kg)	0.6	0.9	1.4	2.1	2.8	4.2

Note :
- Connection types available upon request NPT, BSP screwed for JKB and FST-S (subject to special quotation) ANSI, DIN flanged for FST-F and SST.
- The weight and lenght "L" are based on standard products and they may be subject to change.

model JST-YF11, JST-YF21[FST-F, SST] flanged

Dimensions

Model	Size mm(inch) / Part	15 (1/2")	20 (3/4")	25 (1")	32 (1 1/4")	40 (1 1/2")	50 (2")	65 (2 1/2")	80 (3")	100 (4")	125 (5")	150 (6")	200 (8")	250 (10")	300 (12")	350 (14")
	d	125	140	165	178	195	220	28.5	305	360	410	480	590	650	800	900
	l	65	75	85	95	105	115	206	236	274	324	378	450	470	500	600
JKB	h	23	28	38	46	51	59	70	85	106	134	160	206	264	324	365
	ds	34.3	49	63	66	75.5	87.5	160	190	230	270	320	380	365	425	465
	ℓs							1/2"	3/4"	1"	1"	1"	1 1/4"	2"	2"	2"
	Wt (kg)	2	2.6	4.3	6.2	6.2	8.1	12	13.6	22.8	43.7	59	100	190	260	330
	d	145	150	170	212	212	243	256	295	340	410	480	580	660	800	900
	l	75	85	105	125	125	160	155	190	215	290	300	400	440	545	600
FST-S	h	24	31	39	44	44	52	75	89	109	141	161	219	264	324	359
	ds	53	67	80	102	102	134	115	138	158	258	265	351	355	415	455
	ℓs						M20 X 1.5	M24 X 2	M24 X 2	M30 X 2	M30 X 2	M30 X 2	M30 X 2	M36 X 2	M36 X 2	M36 X 2
	Wt (kg)	2.6	3.5	5.3	7.8	7.8	10.4	12.6	19.2	29.5	49.5	65	110	205	275	350

Filtering Metals

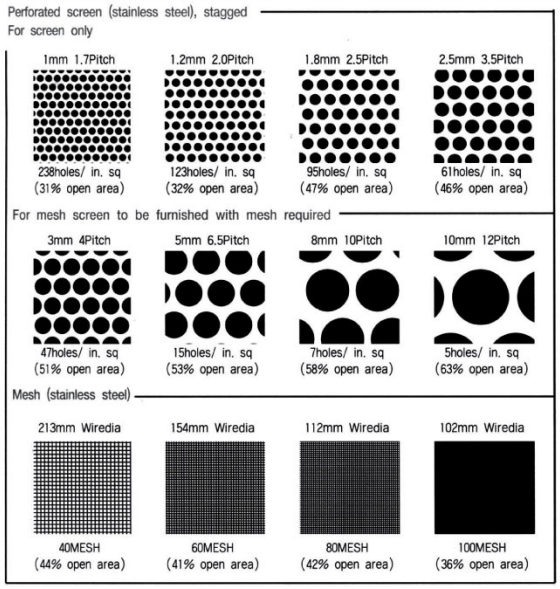

Friction Loss Curve Of Water Head

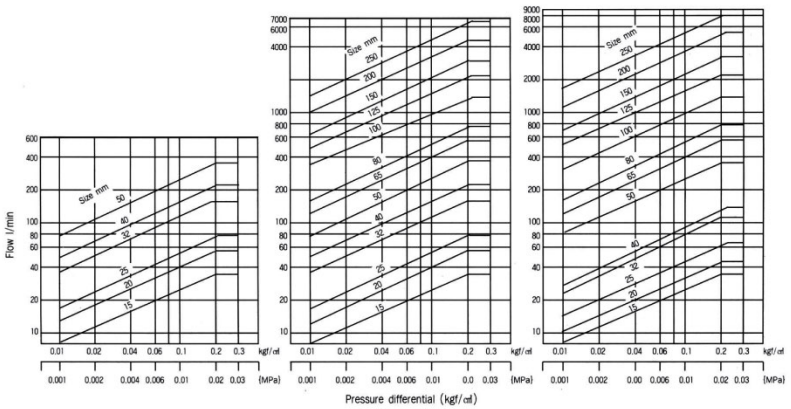

$$R = \frac{\sqrt{3}\times\pi}{6}\times\left(\frac{D}{P}\right)^2\times 100 = \frac{91\times D^2}{P^2}\ (\%)$$

R = Open area ratio(%)
P: Pitch (Width)
P₁: Pitch (deepth)
D: Diameter of hole
T: Tickness
The letters show in dimension(mm)

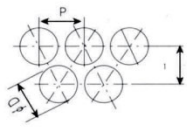

Dimension of perforated screen
For screen only (mm)

Size / Part	t	ϕD	P	R(%)
15~25	0.25	0.8	1.5	25.88
32~50	0.3	1.0	1.7	31.48
65~100	0.5	1.2	2.0	32.76
125~150	0.6	1.5	2.2	42.30
200	0.8	1.8	2.5	47.17
250~350	1.0	2.5	3.5	46.43

For screen with mesh inside (mm)

Size / Part	t	ϕD	P	R(%)
15~50	0.5	3.0	4.0	51.19
65~100	0.7	5.0	6.5	53.85
125~200	1.0	8.0	10.0	58.24
250~350	1.5	10.0	12.0	63.19

For mesh to be coated screen (mm)

Mesh	P	S.W.G	Wire dia.	R(%)
40	40	35	0.2134	44.1
60	60	38	0.1524	41.2
80	80	41	0.1118	42.0
100	100	42	0.1016	36.0

** Values given for information. Changes possible.*