SIMBA TOUCH - Pressure Weighing Sensor Control Instrument For Industrial Automation
Brand: Simba Touch
Model: SBT961

Features:

1. For the circumstance which needs to convert dynamometry signal into digital communication signal and standard analog output signal, and needs a simple control.
2. For analog output signal, it may select 0-20mA, 4-20mA, 0-10V, 1-5V, and for digital communication interface, it may select RS485 or RS232, both of which come with isolation.
3. The double-row 6-position LED nixie tubes display the real-time measured value, peak value, output current value, I/O status information respectively
4. The controller has the limit judgment function for upper limit, median limit and lower limit, and please see the Note 3 to Instructions for specific control functions.
5. The limit output contains three output modes: upper, lower, up and down judgment, and please see the Note 2 to Instructions for detailed explanation.
6. The I/O includes 4 inputs and 6 outputs, which can customize the function of input and output interfaces.
7. The output of driving controller can realized through upper computer, which can partially substitute the PLC.
8. The power supply of the controller is DC24V, with ±5V of wide voltage range, which is more safe and stable.
9. The panel is in the form of installation, and the panel area is only 110mm (width) ×62mm (height).

Specifications:

Display window	Double-row 6-position LED display, with 9mm and 7.5mm of letter height respectively
Division value	1, 2, 5, 10, 20, 50
Max weighing display range	999999
Number of decimal place	0、0.0、0.00、0.000、0.0000、0.00000
Static accuracy class	Resolution 900000
Max signal input	-3.6 mV/V ~ 3.6 mV/V
Range	(equivalent to -18 mV ~ 18 mV/V)
Zero drift	≤0.05μV（@ 0.02mV/V）
Span temperature coefficient	≤10ppm/°C
Input impedance of sensor interface	≥20MΩ
Non-linear error	≤0.002%FS
A/D switching speed	≤400 times / second
Zero drift	≤10μV/°C
Span temperature coefficient	≤0.02%FS/°C
Sensor Type	Resistance strain sensor
Sensor excitation voltage	DC5V, up to 8 350Ω sensors connection in parallel
On-off output (contact) capacity	Relay output capacity: AC220V 1A Totally 6 routes / Transistor output capacity: DC24V 0.5A
On-off input voltage	DC24V
On-off input current	4-6mA
Power supply range	DC24V （±5V）
Product power	≤10W
Working temperature	-10°C~50°C
Humidity range	≤90% relative humidity (non-condensing)

Installation Dimension:

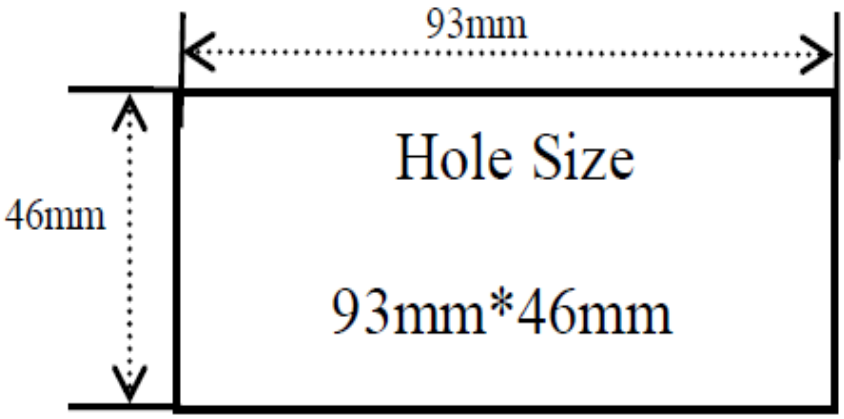

Figure 1

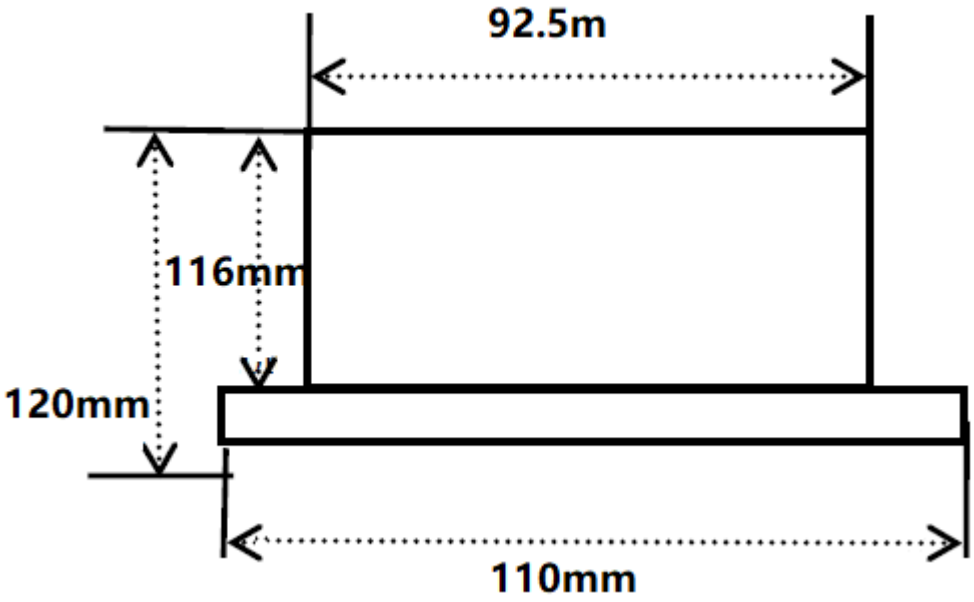

Figure 2

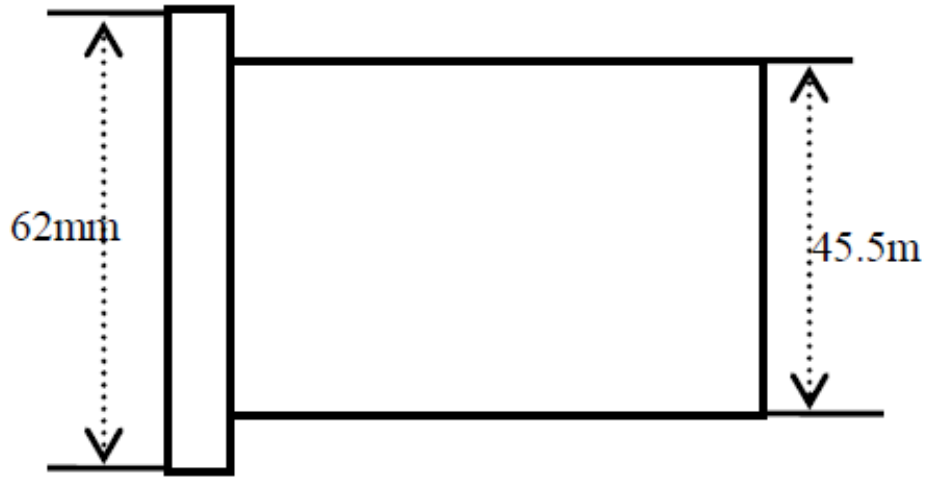

Figure 3