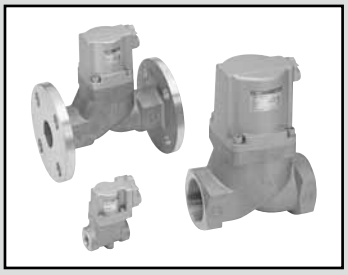

Air operated 2-port valve
(cylinder valve)

SAB*W Series

- NC, NO, double acting
- Port size: Rc1/4 to Rc2, 32 to 80 flange
- Working fluids: Water, non-corrosive liquid

RoHS CAD

JIS symbol

● NC

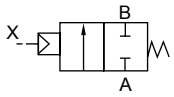

● NO

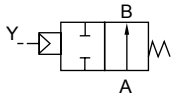

● Double acting

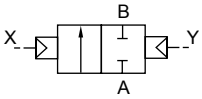

Common specifications

1 MPa = 10 bar

Descriptions	SAB1W	SAB2W	SAB3W
Actuation	NC	NO	Double acting
Working fluid	Water/non-corrosive liquid (*1)		
Fluid viscosity mm^2/s	500 or less		
Working pressure MPa	0 (≈0 psi) to 0.7 (≈100 psi)(*2)	0 (≈0 psi, 0 bar) to 1 (≈150 psi, 10 bar)	
Proof pressure (water pressure) MPa	2.0 (≈290 psi, 20 bar)		
Fluid temperature °C	-10 (14°F) to 60 (140°F) (no freezing) (*3)		
Ambient temperature °C	-10 (14°F) to 60 (140°F)		
Valve seat leakage cm^3/min	0 (water pressure)		
Mounting orientation	Unrestricted		
Pilot fluid	Air		
Water hammer value MPa	1 (≈150 psi, 10 bar) or less (according to the Water Supply Act)		

*1 : Refer to the working fluid check list on Intro Page 39.
*2 : Note that this differs with the type, so refer to the working pressure in the individual specifications.
*3 : -10 to 90°C for fluoro rubber seal (FKM).

Individual specifications

1 MPa = 10 bar

Descriptions / Model No.	Port size	Orifice size (mm)	Cv	Working pressure (MPa) NC	Working pressure (MPa) NO / Double acting	Pilot pressure (MPa) NC	Pilot pressure (MPa) NO / Double acting	Pilot port size	Weight (kg) NC	Weight (kg) NO	Weight (kg) Double acting
SAB*W-8A	Rc 1/4	10	2.3	0 (≈0 psi) to 0.7 (≈100 psi)	0 (≈0 psi) to 1 (≈150 psi)	0.35 (≈51 psi) to 0.7 (≈100 psi)	(*1)	Rc1/8	0.3		
SAB*W-10A	Rc 3/8	10	2.6						0.3		
SAB*W-15A	Rc 1/2	15	5.6						0.6		
SAB*W-20A	Rc 3/4	16	8						0.8		
SAB*W-25A	Rc 1	20	12						1.1		
SAB*W-32A	Rc 1 1/4	26	20	0 (≈0 psi) to 0.5 (≈73 psi)	0 (≈0 psi) to 1 (≈150 psi)	0.25 (≈36 psi) to 0.7 (≈100 psi)	(*1)		2.3	2.2	2.2
SAB*W-32F	32 flange	26	20						5.3	5.2	5.2
SAB*W-40A	Rc 1 1/2	32	32						3.4	3.2	3.2
SAB*W-40F	40 flange	32	32						6.5	6.3	6.3
SAB*W-50A	Rc 2	42	50						5.5	5.2	5
SAB*W-50F	50 flange	42	50						9.4	9.1	8.9
SAB*W-65F(*2)	65 flange	65	70						20.5	19	18
SAB*W-80F(*2)	80 flange	79	100						25	23	22

*1 : Refer to page 568 for the pilot air pressure for the NO and double acting.
*2 : Port sizes 65 flange/80 flange are custom order products.
*3 : Female thread is available in G thread and NPT thread.

How to order

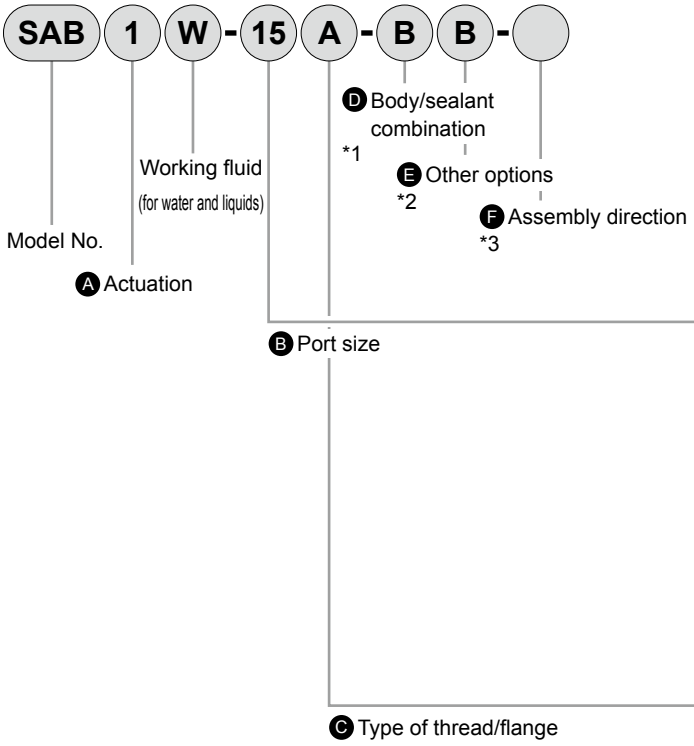

Code	Content
Ⓐ Actuation	
1	NC
2	NO
3	Double acting

Ⓑ Port size	
8	1/4
10	3/8
15	1/2
20	3/4
25	1
32	1 1/4, 32 (Flange)
40	1 1/2, 40 (Flange)
50	2, 50 (Flange)
65	65 (Flange) (custom order product)
80	80 (Flange) (custom order product)

Ⓒ Type of thread/flange	
A	Rc(8A to 50A)
F	Flange (32F to 80F)
G	G(8G to 50G)
N	NPT(8N to 50N)

Ⓓ Body/sealant combination

		Body	Seal
0	Standard	Bronze	Nitrile rubber
B	Option	Bronze	Fluoro rubber
P		Bronze	Ethylene propylene rubber
D		Stainless steel	Nitrile rubber
E		Stainless steel	Fluoro rubber
R		Stainless steel	Ethylene propylene rubber

Ⓔ Other options	
Blank	No option
B	Mounting plate *2

Ⓕ Assembly direction	
Blank	No option
R	Mounting plate assembly position reversed

Refer to the figure below for the layout drawing.

⚠ Precautions for model No. selection

*1 : The body/sealant combination code is O or B for port size 65F and 80F. Note that the body is made of cast iron.
*2 : The mounting plate (Item Ⓔ B) is available only for port size 8 to 32.
*3 : Reversed mounting plate (Item Ⓕ B-R) is available for port size 15 to 32.
*4 : Clockwise when viewed from above with the port A on the right.

[Example of model No.]

SAB1W-15A-BB

Model: SAB
Ⓐ Actuation : NC
Ⓑ Port size : 1/2
Ⓒ Type of thread/flange : Rc
Ⓓ Body/sealant combination : Body - bronze, sealant - fluoro rubber
Ⓔ Other options : With mounting plate
Ⓕ Assembly direction : No option

Item Ⓕ Assembly direction

SAB [Air operated] *2/4

Code	B (with mounting plate)	B-R *3
Direction	No rotation	Mounting plate reversed
Layout	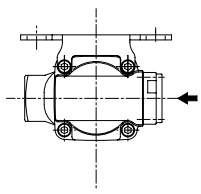	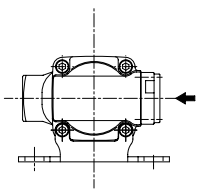

⬅ shows pilot port IN.

EXA
FWD
HNB/G
USB/G
FAB/G
FGB/G
FVB
FWB/G
FHB
FLB
AB
AG
AP/AD
APK/ADK
DryAir
EX-XPLNprf
XPLNprf
HVB/HVL
S⇕B/NAB
LAD/NAD
Water-Rela
NP/NAP/NVP
SNP
CHB/G
MXB/G
Other valves
SWD/MWD
DustColl
CVE/CVSE
CCH/CPE/D
LifeSci
Gas-Combus
Auto-Water
SpecFld
Custom
Ending

Internal structure and parts list

● SAB1W

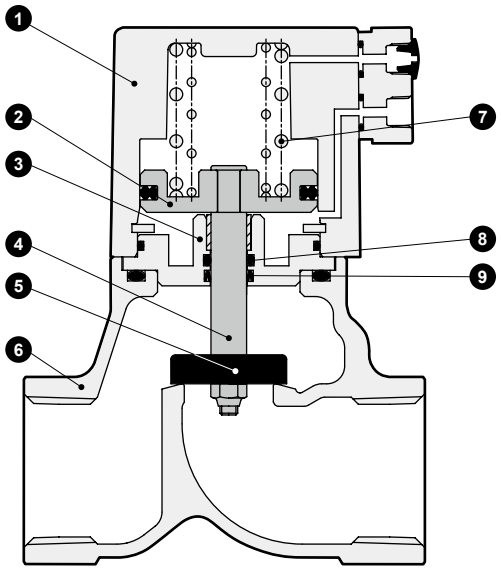

No.	Part name	Material	
1	Cylinder guard	ADC12	Aluminum die-casting
2	Piston	A2017	Aluminum
3	Adaptor	C3604(SUS304)	Copper alloy (stainless steel)
4	Piston rod	SUS304	Stainless steel
5	Main valving element	NBR(FKM, EPDM) SUS304	Nitrile rubber (fluoro rubber, ethylene propylene rubber) stainless steel
6	Body	CAC408(SCS13)	Bronze casting (stainless steel casting)
7	Spring	SWP	Piano wire
8	O-ring	NBR(FKM, EPDM)	NBR (FPM, EPM rubber)
9	MY packing	NBR(FKM, EPDM)	NBR (FPM, EPM rubber)

*1 : ( ) shows options.
*2 : For 65F and 80F, the body is FC250 (cast iron), and the main valving element material is FKM.

Dimensions

CAD

● SAB*W-8* to 50* (female thread)

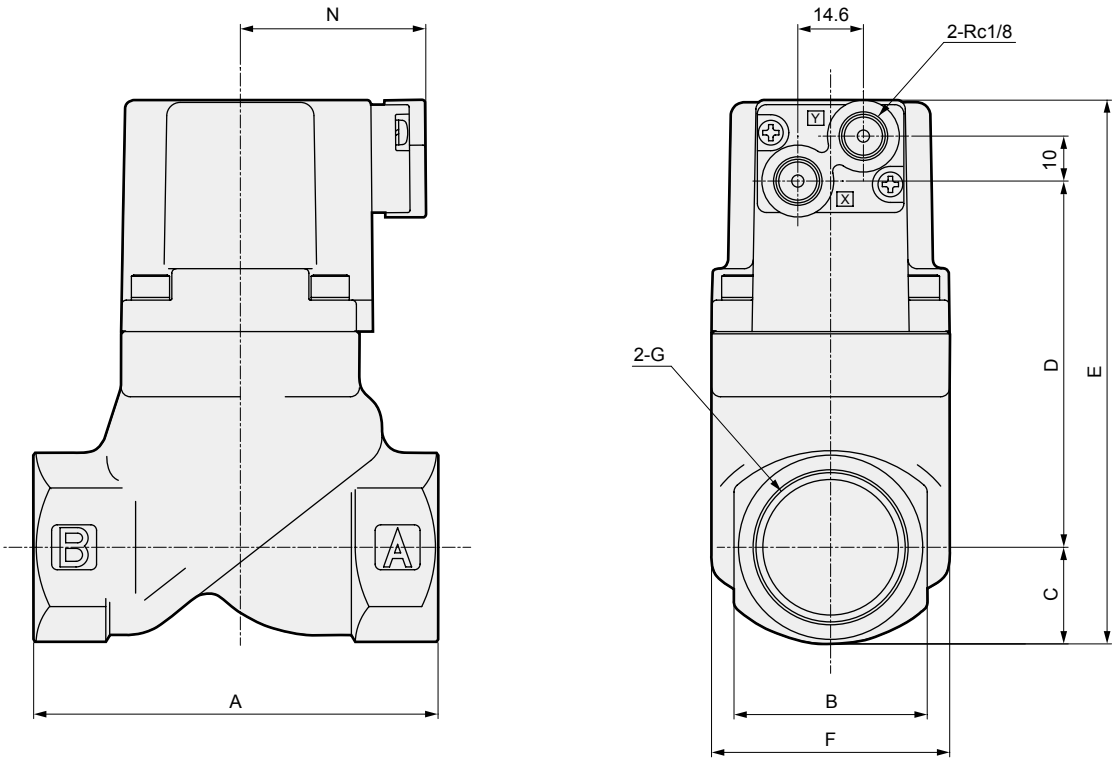

Model No.	A	B	C	D	E	F	G	N
SAB*W-8A/G/N	50	24	12	41.5	71.5	32	Rc1/4 / G1/4 / 1/4-18NPT	37(42)
SAB*W-10A/G/N							Rc3/8 / G3/8 / 3/8-18NPT	
SAB*W-15A/G/N	71	28	14.5	61.5	94	43	Rc1/2 / G1/2 / 1/2-14NPT	38(43)
SAB*W-20A/G/N	80	35	17.5	71	106.5	43	Rc3/4 / G3/4 / 3/4-14NPT	38(43)
SAB*W-25A/G/N	90	43	21	81.5	120.5	53	Rc1/G1/1-11.5NPT	41.5(46.5)
SAB*W-32A/G/N	125	55	27.5	109.5	155	63	Rc1 1/4 / G1 1/4 / 1 1/4-11.5 NPT	46(51)
SAB*W-40A/G/N	140	61	30.5	130.5	179	77	Rc1 1/2 / G1 1/2 / 1 1/2-11.5 NPT	53(58)
SAB*W-50A/G/N	160	76	38	164	220	95	Rc2/G2/2-11.5NPT	61(66)

*1: ( ) shows values for G thread.

Dimensions

● SAB*W-32F to 80F (flange)

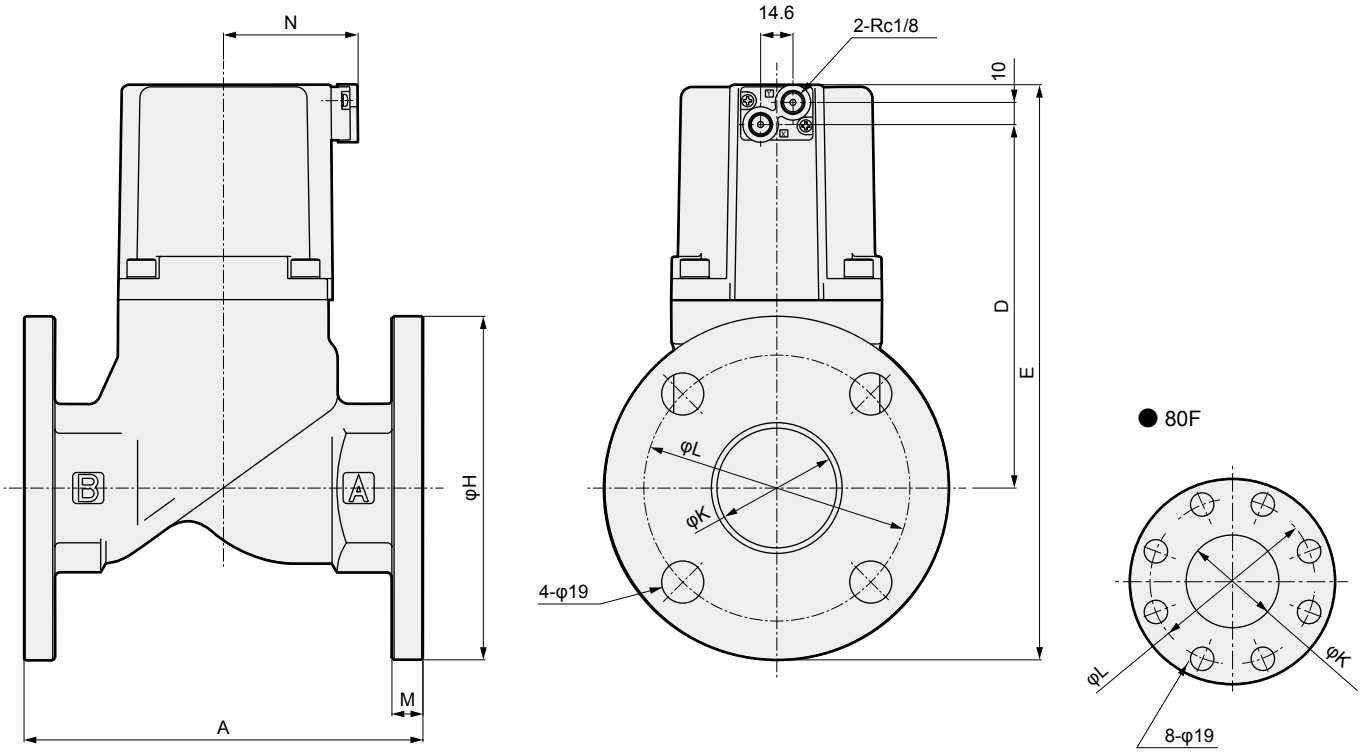

Model No.	A	D	E	H	K	L	M	N
SAB*W-32F	170	109.5	195	135	36	100	12	46
SAB*W-40F	180	130.5	218.5	140	42	105	12	53
SAB*W-50F	180	164	259.5	155	54	120	14	61
SAB*W-65F	210	199	347.5	175	68	140	16	101
SAB*W-80F	240	214	367.5	185	82	150	16	111

Optional dimensions

● Mounting plate
SAB*W-8*/10*-* B

Material: Steel
Zinc plated

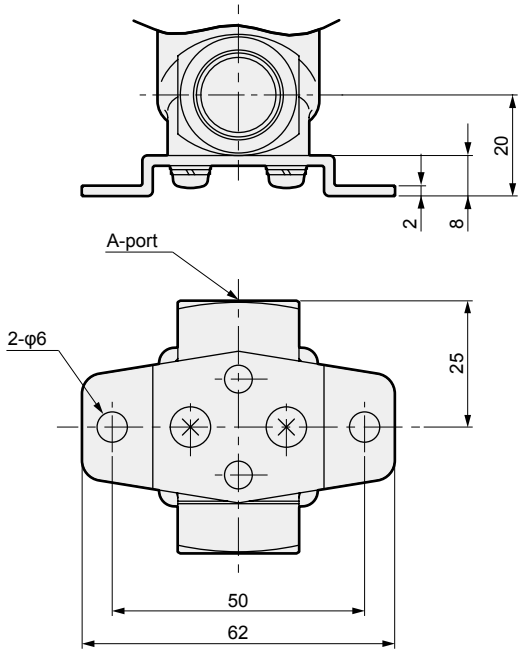

* Use the body mounting screws if fixing without a mounting plate.
(Thread size: M4 depth 8 pitch 19)

● Mounting plate
SAB*W-15* to 32*-* B / B-R

Material: Steel
Zinc plated

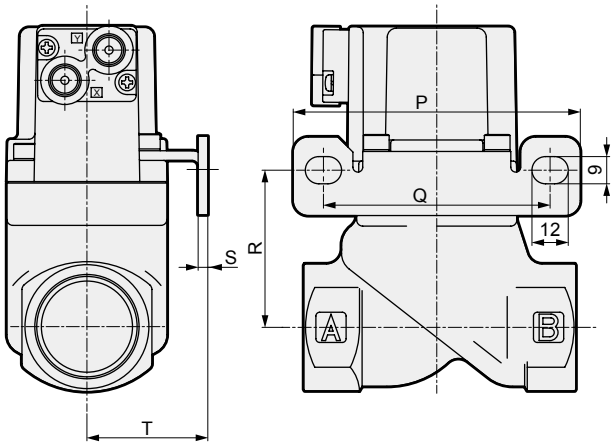

* The figure shows B.

Model No.	P	Q	R	S	T
SAB*W-15A/G/N	90	70	39	2.3	30
SAB*W-20A/G/N	90	70	48.5	2.3	30
SAB*W-25A/G/N	95	75	52	3.2	40
SAB*W-32A/G/N	105	85	66.5	3.2	45

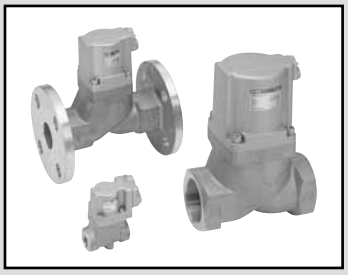

Air operated 2-port valve
(cylinder valve)

SAB*A Series

- NC, NO, double acting
- Port size: Rc1/4 to Rc2 32 to 80 flange
- Working fluid: Air, gas

RoHS CAD

JIS symbol

● NC

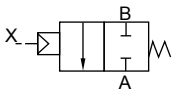

● NO

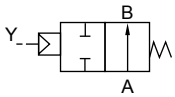

● Double acting

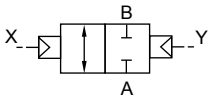

Common specifications

1 MPa = 10 bar

Descriptions	SAB1A	SAB2A	SAB3A
Actuation	NC	NO	Double acting
Working fluid	Air/gas (*1)		
Working pressure MPa	0 (≈0 psi) to 0.9 (≈130 psi)	0 (≈0 psi, 0 bar) to 1 (≈150 psi, 10 bar)	
Proof pressure (water pressure) MPa	2.0 (≈290 psi, 20 bar)		
Fluid temperature °C	-10 (14°F) to 60 (140°F) (no freezing) (*2)		
Ambient temperature °C	-10 (14°F) to 60 (140°F)		
Valve seat leakage cm^3/min	0.12 or less (pneumatic pressure)		
Mounting orientation	Unrestricted		
Pilot fluid	Air		
Pilot pressure MPa	0.35 (≈51 psi) to 0.7 (≈100 psi)	Refer to page 568.	

*1 : Refer to the working fluid check list on Intro Page 39.
*2 : -10 to 90°C for fluoro rubber seal (FKM).

Individual specifications

1 MPa = 10 bar

Descriptions / Model No.	Port size	Orifice size (mm)	C [dm^3/(s·bar)]	b	S (mm^2)	Allowable back pressure (MPa)	Pilot port size	Weight (kg)
NC								
SAB1A-8A	Rc1/4	10	8.3	0.4	-	0.5 (≈73 psi)	Rc1/8	0.3
SAB1A-10A	Rc3/8	10	11	0.4	-			0.3
SAB1A-15A	Rc1/2	15	-	-	120	0.1 (≈15 psi, 1 bar)		0.6
SAB1A-20A	Rc3/4	16	-	-	150			0.8
SAB1A-25A	Rc1	20	-	-	240			1.1
SAB1A-32A	Rc1 1/4	26	-	-	390			2.2
SAB1A-32F	32 flange	26	-	-	390			5.2
SAB1A-40A	Rc1 1/2	32	-	-	610			3.2
SAB1A-40F	40 flange	32	-	-	610			6.3
SAB1A-50A	Rc2	42	-	-	920			5.2
SAB1A-50F	50 flange	42	-	-	920			9.1
SAB1A-65F(*2)	65 flange	65	-	-	1290			19.5
SAB1A-80F(*2)	80 flange	79	-	-	1840			23.5
NO								
SAB2A-8A	Rc1/4	10	8.9	0.4	-	0.1 (≈15 psi, 1 bar)	Rc1/8	0.3
SAB2A-10A	Rc3/8	10	12	0.3	-			0.3
SAB2A-15A	Rc1/2	15	-	-	140			0.6
SAB2A-20A	Rc3/4	16	-	-	180			0.8
SAB2A-25A	Rc1	20	-	-	280			1.1
SAB2A-32A	Rc1 1/4	26	-	-	450	0.05 (≈7.3 psi, 0.5 bar)		2.2
SAB2A-32F	32 flange	26	-	-	450			5.2
SAB2A-40A	Rc1 1/2	32	-	-	680			3.2
SAB2A-40F	40 flange	32	-	-	680			6.3
SAB2A-50A	Rc2	42	-	-	1020			5.2
SAB2A-50F	50 flange	42	-	-	1020			9.1
SAB2A-65F(*2)	65 flange	65	-	-	1290			19
SAB2A-80F(*2)	80 flange	79	-	-	1840			23
Double acting (*1)								
SAB3A-8A	Rc1/4	10	8.3(8.9)	0.4	-	1 (≈150 psi, 10 bar)	Rc1/8	0.3
SAB3A-10A	Rc3/8	10	11(12)	0.4(0.3)	-			0.3
SAB3A-15A	Rc1/2	15	-	-	120(140)			0.6
SAB3A-20A	Rc3/4	16	-	-	150(180)			0.8
SAB3A-25A	Rc1	20	-	-	240(280)			1.1
SAB3A-32A	Rc1 1/4	26	-	-	390(450)			2.2
SAB3A-32F	32 flange	26	-	-	390(450)			5.2
SAB3A-40A	Rc1 1/2	32	-	-	610(680)			3.2
SAB3A-40F	40 flange	32	-	-	610(680)			6.3
SAB3A-50A	Rc2	42	-	-	920(1020)			5.2
SAB3A-50F	50 flange	42	-	-	920(1020)			9.1
SAB3A-65F(*2)	65 flange	65	-	-	1290			18
SAB3A-80F(*2)	80 flange	79	-	-	1840			22

*1 : ( ) of C, b and S columns of double acting shows the flow rates of when port A is pressurized.
*2 : Port sizes 65 flange/80 flange are custom order products.
*3 : Effective cross-sectional area S and sonic conductance C are converted as S ≈ 5.0 x C.
*4 : Female thread is available in G thread and NPT thread.

How to order

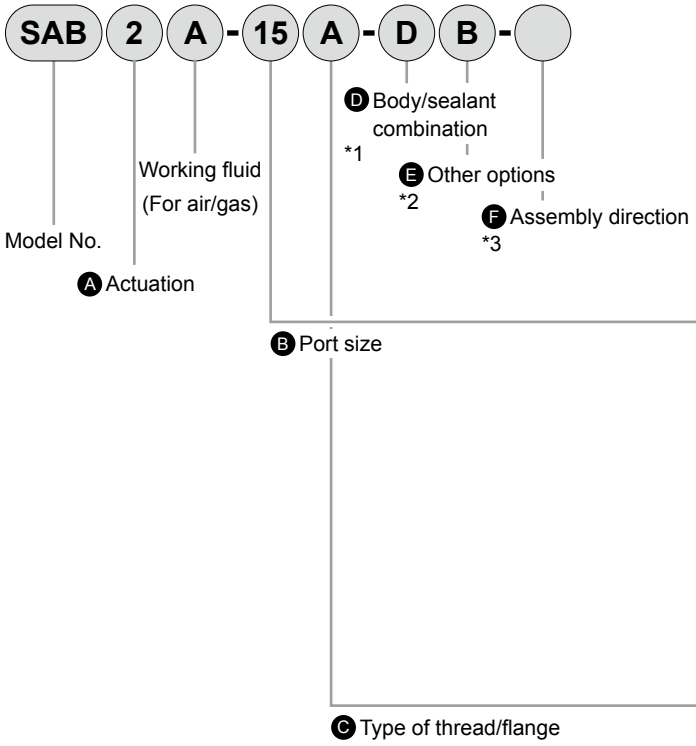

Code	Content
Ⓐ Actuation	
1	NC
2	NO
3	Double acting

Ⓑ Port size	
8	1/4
10	3/8
15	1/2
20	3/4
25	1
32	1 1/4, 32 (Flange)
40	1 1/2, 40 (Flange)
50	2, 50 (Flange)
65	65 (Flange) (custom order product)
80	80 (Flange) (custom order product)

Ⓒ Type of thread/flange	
A	Rc(8A to 50A)
F	Flange (32F to 80F)
G	G(8G to 50G)
N	NPT(8N to 50N)

Ⓓ Body/sealant combination

		Body	Seal
0	Standard	Bronze	Nitrile rubber
B	Option	Bronze	Fluoro rubber
P		Bronze	Ethylene propylene rubber
D		Stainless steel	Nitrile rubber
E		Stainless steel	Fluoro rubber
R		Stainless steel	Ethylene propylene rubber

Ⓔ Other options	
Blank	No option
B	Mounting plate *2

Ⓕ Assembly direction	
Blank	No option
R	Mounting plate assembly position reversed

Refer to the figure below for the layout drawing.

⚠ Precautions for model No. selection

*1 : The body/sealant combination code is O or B for port size 65F and 80F. Note that the body is made of cast iron.
*2 : The mounting plate (Item Ⓔ B) can be attached to only the female thread of port size 8 to 32.
*3 : Reversed mounting plate (Item Ⓕ B-R) is available for port size 15 to 32.
*4 : Clockwise when viewed from above with the port A on the right.

[Example of model No.]

SAB2A-15A-DB

Model: SAB

Ⓐ Actuation : NO
Ⓑ Port size : 1/2
Ⓒ Type of thread/flange : Rc
Ⓓ Body/sealant combination : Body - stainless steel, sealant - nitrile rubber
Ⓔ Other options : With mounting plate
Ⓕ Assembly direction : No option

Item Ⓕ Assembly direction

SAB [Air operated] *2/4

Code	B (with mounting plate)	B-R *3
Direction	No rotation	Mounting plate reversed
Layout	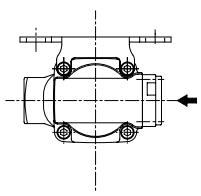	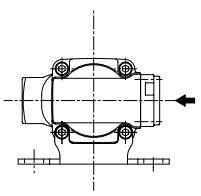

⬅ shows pilot port IN.

Internal structure and parts list

● SAB1A

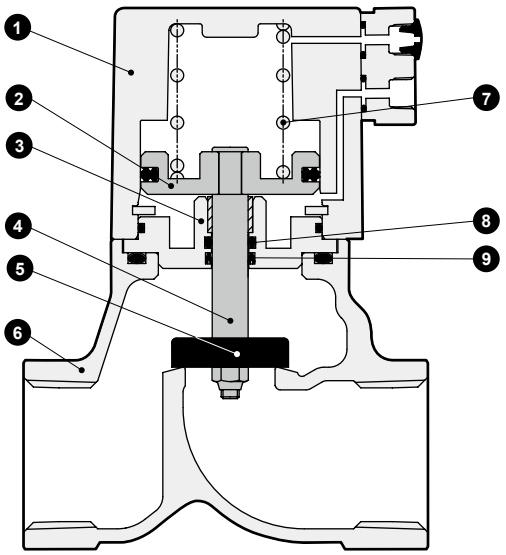

No.	Part name	Material	
1	Cylinder guard	ADC12	Aluminum die-casting
2	Piston	A2017	Aluminum
3	Adaptor	C3604(SUS304)	Copper alloy (stainless steel)
4	Piston rod	SUS304	Stainless steel
5	Main valving element	NBR(FKM, EPDM) SUS304	Nitrile rubber (fluoro rubber, ethylene propylene rubber) stainless steel
6	Body	CAC408(SCS13)	Bronze casting (stainless steel casting)
7	Spring	SWP	Piano wire
8	O-ring	NBR(FKM, EPDM)	NBR (FPM, EPM rubber)
9	MY packing	NBR(FKM, EPDM)	NBR (FPM, EPM rubber)

*1 : ( ) shows options.
*2 : For 65F and 80F, the body is FC250 (cast iron), and the main valving element material is FKM.

Dimensions

● SAB*A-8* to 50* (female thread)

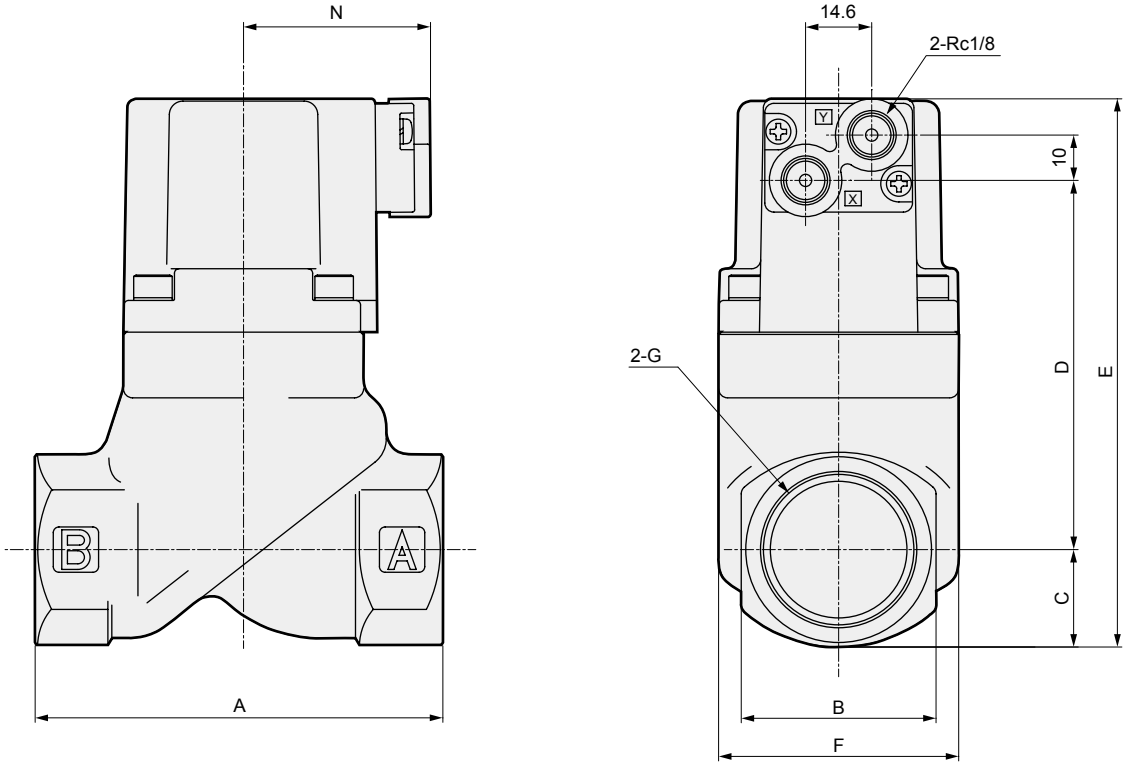

Model No.	A	B	C	D	E	F	G	N
SAB*A-8A/G/N	50	24	12	41.5	71.5	32	Rc1/4 / G1/4 / 1/4-18NPT	37(42)
SAB*A-10A/G/N							Rc3/8 / G3/8 / 3/8-18NPT	
SAB*A-15A/G/N	71	28	14.5	61.5	94	43	Rc1/2 / G1/2 / 1/2-14NPT	38(43)
SAB*A-20A/G/N	80	35	17.5	71	106.5	43	Rc3/4 / G3/4 / 3/4-14NPT	38(43)
SAB*A-25A/G/N	90	43	21	81.5	120.5	53	Rc1/G1/1-11.5NPT	41.5(46.5)
SAB*A-32A/G/N	125	55	27.5	109.5	155	63	Rc1 1/4 / G1 1/4 / 1 1/4-11.5 NPT	46(51)
SAB*A-40A/G/N	140	61	30.5	130.5	179	77	Rc1 1/2 / G1 1/2 / 1 1/2-11.5 NPT	53(58)
SAB*A-50A/G/N	160	76	38	164	220	95	Rc2/G2/2-11.5NPT	61(66)

*1: ( ) shows values for G thread.

Dimensions

● SAB*A-32F to 80F (flange)

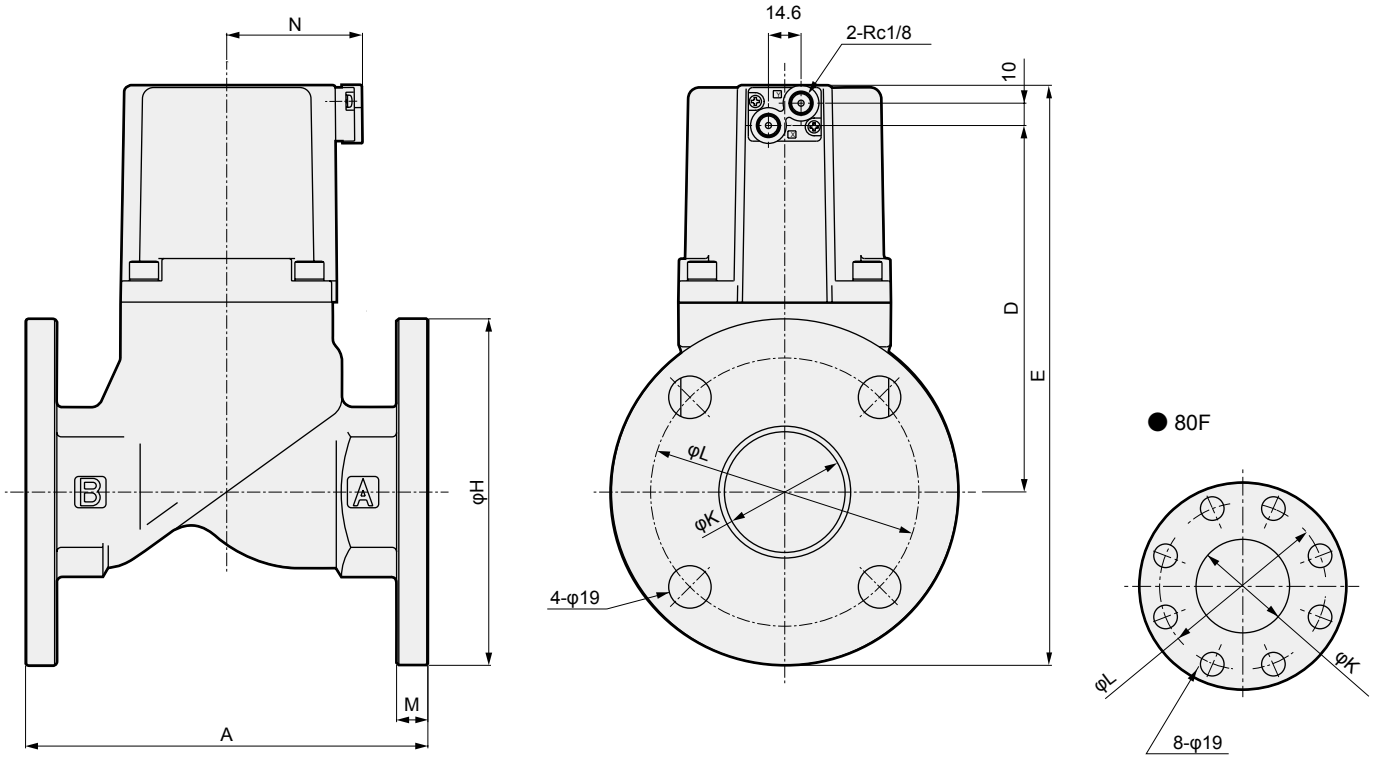

Model No.	A	D	E	H	K	L	M	N
SAB*A-32F	170	109.5	195	135	36	100	12	46
SAB*A-40F	180	130.5	218.5	140	42	105	12	53
SAB*A-50F	180	164	259.5	155	54	120	14	61
SAB*A-65F	210	199	347.5	175	68	140	16	101
SAB*A-80F	240	214	367.5	185	82	150	16	111

Optional dimensions

● Mounting plate
SAB*A-8*/10*-* B

Material: Steel
Zinc plated

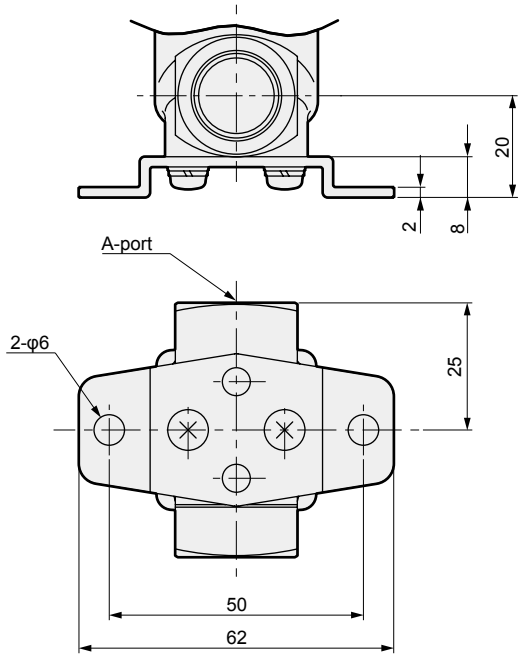

* Use the body mounting screws if fixing without a mounting plate.
(Thread size: M4 depth 8 pitch 19)

● Mounting plate
SAB*A-15* to 32*-* B / B-R

Material: Steel
Zinc plated

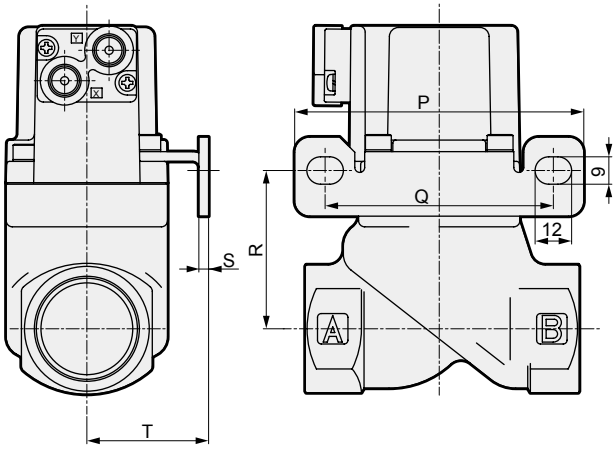

* The figure shows B.

Model No.	P	Q	R	S	T
SAB*A-15A/G/N	90	70	39	2.3	30
SAB*A-20A/G/N	90	70	48.5	2.3	30
SAB*A-25A/G/N	95	75	52	3.2	40
SAB*A-32A/G/N	105	85	66.5	3.2	45

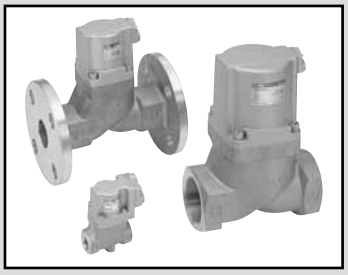

Air operated 2-port valve
(cylinder valve)

SAB*V Series

- NC, NO, double acting
- Port size: Rc1/4 to Rc2, 32 to 50 flange
- Working fluid: Low vacuum

RoHS CAD

JIS symbol

● NC

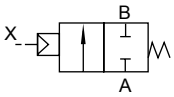

● NO

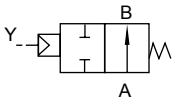

● Double acting

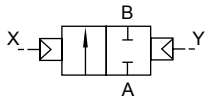

Common specifications

Descriptions	SAB1V	SAB2V	SAB3V
Actuation	NC	NO	Double acting
Working fluid	Low vacuum (air, water) (*1)		
Working pressure Pa(abs)	1.3×10^2 to 7×10^5 (refer to the working pressure in the individual specifications.)		
Proof pressure (water pressure) MPa	2.0 (≈290 psi, 20 bar)		
Fluid temperature °C	-10 (14°F) to 60 (140°F) (no freezing) (*2)		
Ambient temperature °C	-10 (14°F) to 60 (140°F)		
Valve seat leakage Pa·m³/s He	1.33×10^{-3} or less		
Pilot fluid	Air		
Mounting orientation	Unrestricted		

*1 : Refer to the working fluid check list on Intro Page 39.
*2 : -10 to 90°C for fluoro rubber seal (FKM).

Individual specifications

1 MPa ≈ 145.0 psi, 1 MPa = 10 bar

Descriptions / Model No.	Port size	Orifice size (mm)	C [dm³/(s·bar)]	b	S (mm²)	Working pressure Pa (abs) NC	Working pressure Pa (abs) NO	Working pressure Pa (abs) Double acting	Pilot pressure (MPa) NC	Pilot pressure (MPa) NO	Pilot pressure (MPa) Double acting	Pilot port size	Weight (kg) NC	Weight (kg) NO	Weight (kg) Double acting
SAB*V-8A	Rc1/4	10	8.9	0.4	-								0.3		
SAB*V-10A	Rc3/8	10	12	0.3	-	1.3×10^2 to 7×10^5	1.3×10^2 to 1×10^6		0.35 to 0.7				0.3		
SAB*V-15A	Rc1/2	15	-	-	140								0.6		
SAB*V-20A	Rc3/4	16	-	-	180								0.8		
SAB*V-25A	Rc1	20	-	-	280								1.1		
SAB*V-32A	Rc1 1/4	26	-	-	450								2.3	2.2	2.2
SAB*V-32F	32 flange	26	-	-	450								5.3	5.2	5.2
SAB*V-40A	Rc1 1/2	32	-	-	680	1.3×10^2 to 5×10^5	1.3×10^2 to 1×10^6		0.25 to 0.7				3.4	3.2	3.2
SAB*V-40F	40 flange	32	-	-	680								6.5	6.3	6.3
SAB*V-50A	Rc2	42	-	-	1020								5.5	5.2	5
SAB*V-50F	50 flange	42	-	-	1020								9.4	9.1	8.9

(*1) Rc1/8

*1 : Refer to page 568 for the pilot air pressure for the NO and double acting.
*2 : Effective cross-sectional area S and sonic conductance C are converted as S ≈ 5.0 x C.
*3 : Female thread is available in G thread and NPT thread.

How to order

SAB 3 V - 15 A - E B -

- SAB: Model No.
- 3: Ⓐ Actuation
- V: Working fluid (for low vacuum)
- 15: Ⓑ Port size
- A: Ⓒ Type of thread/flange
- E: Ⓓ Body/sealant combination
- B: Ⓔ Other options *1
- (blank): Ⓕ Assembly direction *2

Code	Content
Ⓐ Actuation	
1	NC
2	NO
3	Double acting

Ⓑ Port size	
8	1/4
10	3/8
15	1/2
20	3/4
25	1
32	1 1/4, 32 (Flange)
40	1 1/2, 40 (Flange)
50	2, 50 (Flange)

Ⓒ Type of thread/flange	
A	Rc(8A to 50A)
F	Flange (32F to 50F)
G	G(8G to 50G)
N	NPT(8N to 50N)

Ⓓ Body/sealant combination			
		Body	Seal
0	Standard	Bronze	Nitrile rubber
B	Option	Bronze	Fluoro rubber
P	Option	Bronze	Ethylene propylene rubber
D	Option	Stainless steel	Nitrile rubber
E	Option	Stainless steel	Fluoro rubber
R	Option	Stainless steel	Ethylene propylene rubber

Ⓔ Other options	
Blank	No option
B	Mounting plate *2

Ⓕ Assembly direction	
Blank	No option
R	Mounting plate assembly position reversed

Refer to the figure below for the layout drawing.

⚠ Precautions for model No. selection

*1 : The mounting plate (Item Ⓔ B) can be attached to only the female thread of port size 8 to 32.
*2 : Reversed mounting plate (Item Ⓕ B-R) is available for port size 15 to 32.
*3 : Clockwise when viewed from above with the port A on the right.

[Example of model No.]

SAB3V-15A-EB

Model: SAB

Ⓐ Actuation	: Double acting
Ⓑ Port size	: 1/2
Ⓒ Type of thread/flange	: Rc
Ⓓ Body/sealant combination	: Body - stainless steel, sealant - fluoro rubber
Ⓔ Other options	: With mounting plate
Ⓕ Assembly direction	: No option

Item Ⓕ Assembly direction

SAB [Air operated] *1/3		
Code	B (with mounting plate)	B-R *2
Direction	No rotation	Mounting plate reversed
Layout	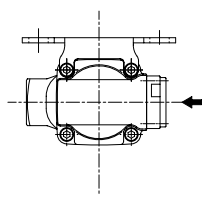	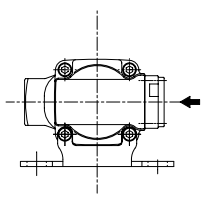

B A

B A

⬅shows pilot port IN.

EXA
FWD
HNB/G
USB/G
FAB/G
FGB/G
FVB
FWB/G
FHB
FLB
AB
AG
AP/AD
APK/ADK
DryAir
EX-XPLNprf
XPLNprf
HVB/HVL
S⇕B/NAB
LAD/NAD
Water-Rela
NP/NAP/NVP
SNP
CHB/G
MXB/G
Other valves
SWD/MWD
DustColl
CVE/CVSE
CCH/CPE/D
LifeSci
Gas-Combus
Auto-Water
SpecFld
Custom
Ending

Internal structure and parts list

● SAB1V

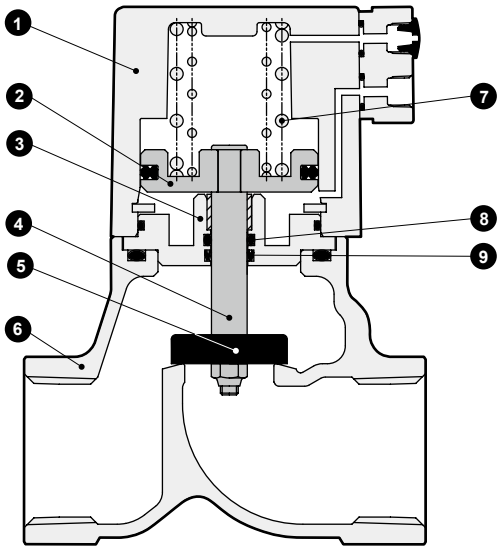

No.	Part name	Material	
1	Cylinder guard	ADC12	Aluminum die-casting
2	Piston	A2017	Aluminum
3	Adaptor	C3604(SUS304)	Copper alloy (stainless steel)
4	Piston rod	SUS304	Stainless steel
5	Main valving element	NBR(FKM, EPDM) SUS304	Nitrile rubber (fluoro rubber, ethylene propylene rubber) stainless steel
6	Body	CAC408(SCS13)	Bronze casting (stainless steel casting)
7	Spring	SWP	Piano wire
8	O-ring	NBR(FKM, EPDM)	NBR (FPM, EPM rubber)
9	MY packing	NBR(FKM, EPDM)	NBR (FPM, EPM rubber)

( ) shows options.

Dimensions CAD

● SAB*V-8* to 50* (female thread)

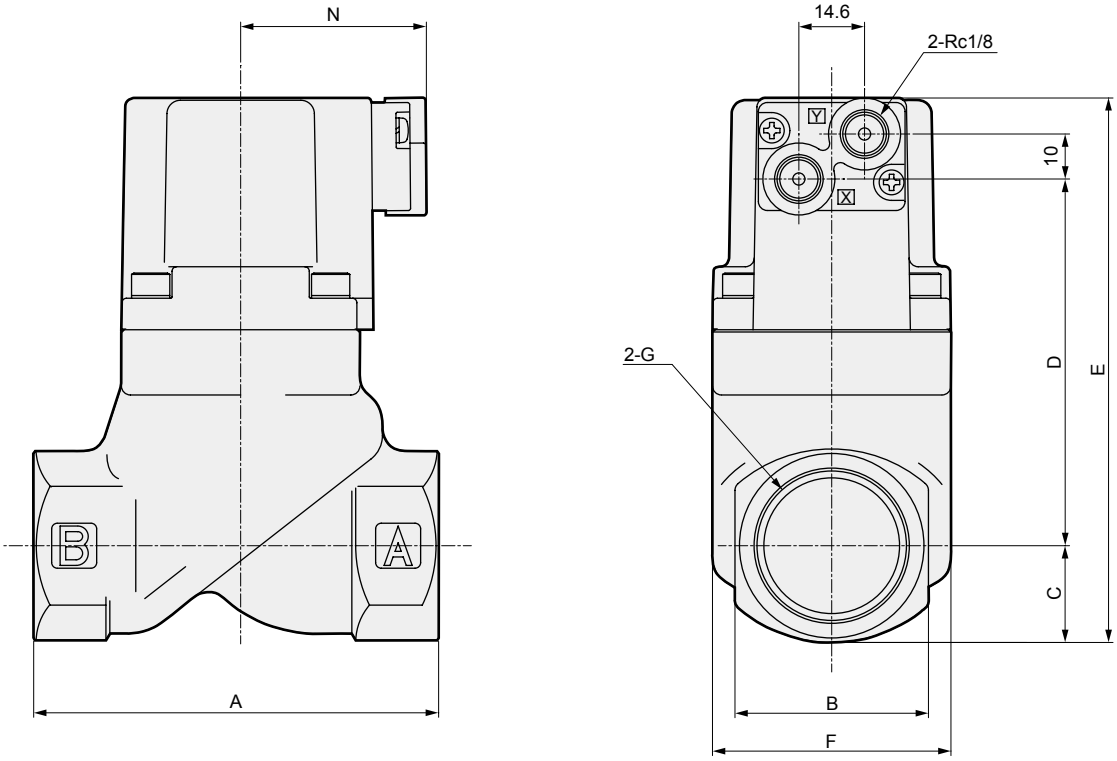

Model No.	A	B	C	D	E	F	G	N
SAB*V-8A/G/N	50	24	12	41.5	71.5	32	Rc1/4 / G1/4 / 1/4-18NPT	37(42)
SAB*V-10A/G/N							Rc3/8 / G3/8 / 3/8-18NPT	
SAB*V-15A/G/N	71	28	14.5	61.5	94	43	Rc1/2 / G1/2 / 1/2-14NPT	38(43)
SAB*V-20A/G/N	80	35	17.5	71	106.5	43	Rc3/4 / G3/4 / 3/4-14NPT	38(43)
SAB*V-25A/G/N	90	43	21	81.5	120.5	53	Rc1/G1/1-11.5NPT	41.5(46.5)
SAB*V-32A/G/N	125	55	27.5	109.5	155	63	Rc1 1/4 / G1 1/4 / 1 1/4-11.5 NPT	46(51)
SAB*V-40A/G/N	140	61	30.5	130.5	179	77	Rc1 1/2 / G1 1/2 / 1 1/2-11.5 NPT	53(58)
SAB*V-50A/G/N	160	76	38	164	220	95	Rc2/G2/2-11.5NPT	61(66)

*1: ( ) shows values for G thread.

Dimensions

● SAB*V-32F to 50F (flange)

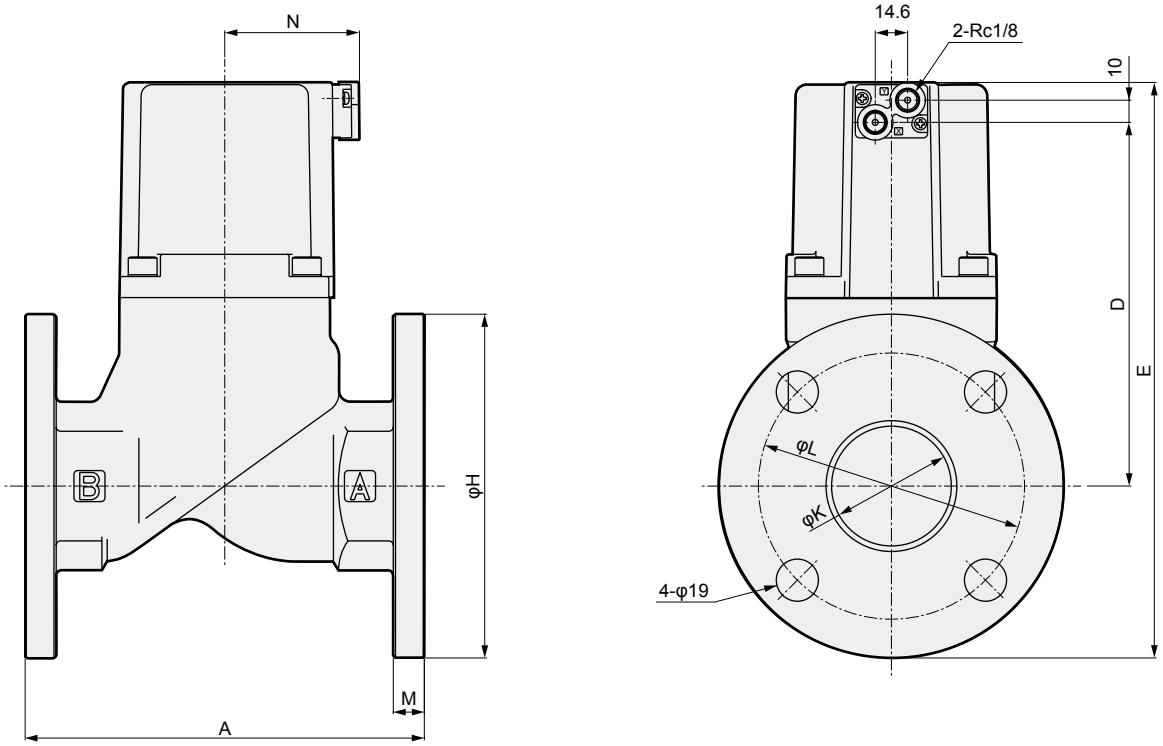

Model No.	A	D	E	H	K	L	M	N
SAB*V-32F	170	109.5	195	135	36	100	12	46
SAB*V-40F	180	130.5	218.5	140	42	105	12	53
SAB*V-50F	180	164	259.5	155	54	120	14	61

Optional dimensions

● Mounting plate
SAB*V-8*/10*-* B

Material: Steel
Zinc plated

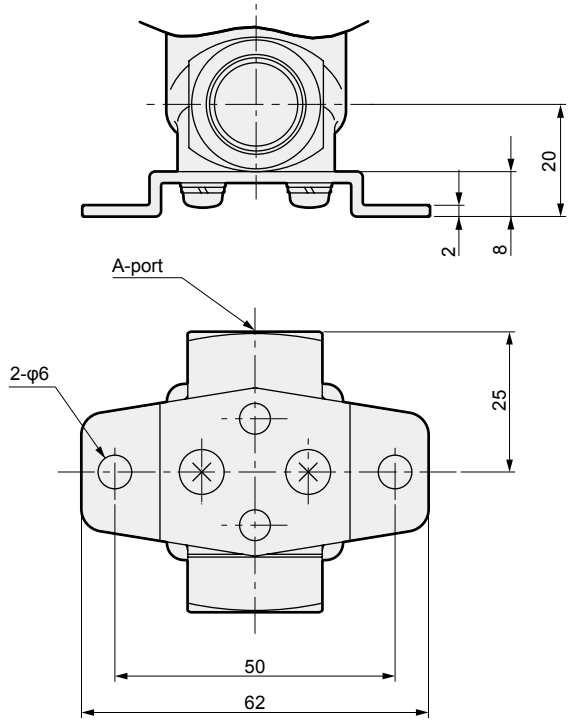

* Use the body mounting screws if fixing without a mounting plate.
(Thread size: M4 depth 8 pitch 19)

● Mounting plate
SAB*V-15* to 32*-* B / B-R

Material Steel
Zinc plated

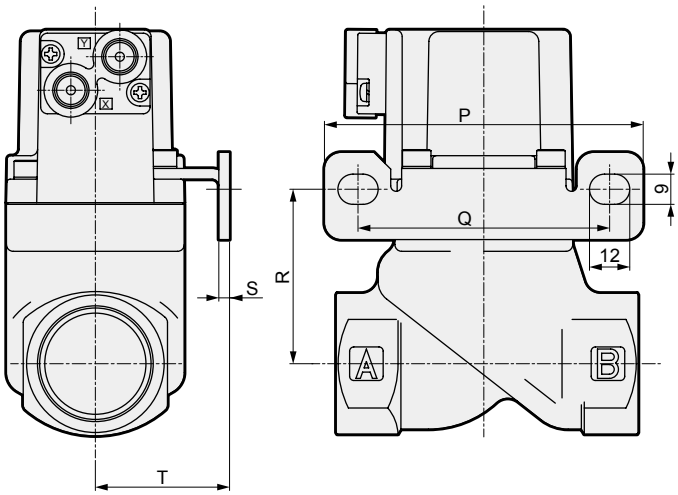

* The figure shows B .

Model No.	P	Q	R	S	T
SAB*V-15A/G/N	90	70	39	2.3	30
SAB*V-20A/G/N	90	70	48.5	2.3	30
SAB*V-25A/G/N	95	75	52	3.2	40
SAB*V-32A/G/N	105	85	66.5	3.2	45

Air operated 2-port valve
(cylinder valve)

SAB*S Series

- NC, NO, double acting
- Port size: Rc1/4 to Rc2, 32 to 50 flange
- Working fluids: Steam, water, air

RoHS CAD

JIS symbol

● NC

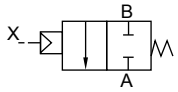

● NO

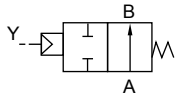

● Double acting

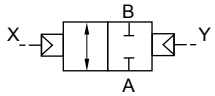

Common specifications

1 MPa = 10 bar

Descriptions	SAB1S	SAB2S	SAB3S
Actuation	NC	NO	Double acting
Working fluid	Steam/water/air/non-corrosive liquid (*1)		
Liquid viscosity mm²/s	500 or less		
Working pressure MPa	0 (≈0 psi, 0 bar) to 1 (≈150 psi, 10 bar)		
Proof pressure (water pressure) MPa	2.0 (≈290 psi, 20 bar)		
Fluid temperature °C	-10 (14°F) to 184 (363.2°F) (no freezing)		
Ambient temperature °C	-10 (14°F) to 90 (194°F)		
Valve seat leakage cm³/min	300 or less (at pneumatic pressure 0.02 to 1 MPa)		
Pilot fluid	Air		
Pilot pressure MPa	0.35 (≈51 psi) to 0.7 (≈100 psi)	Refer to page 568.	
Mounting orientation	Unrestricted		

*1: Refer to the working fluid check list on Intro Page 39.

Individual specifications

Descriptions / Model No.	Port size	Orifice size (mm)	C [dm³/(s·bar)]	b	S (mm²)	Cv	Pilot port size	Weight (kg)
NC: Normally closed								
SAB1S-8A	Rc1/4	10	8.3	0.4	-	2.1	Rc1/8	0.3
SAB1S-10A	Rc3/8	10	11	0.4	-	2.5		0.3
SAB1S-15A	Rc1/2	15	-	-	120	5.5		0.6
SAB1S-20A	Rc3/4	16	-	-	150	7		0.8
SAB1S-25A	Rc1	20	-	-	240	11		1.1
SAB1S-32A	Rc1 1/4	26	-	-	390	18.5		2.2
SAB1S-32F	32 flange	26	-	-	390	18.5		5.2
SAB1S-40A	Rc1 1/2	32	-	-	610	29		3.2
SAB1S-40F	40 flange	32	-	-	610	29		6.3
SAB1S-50A	Rc2	42	-	-	920	43		5.2
SAB1S-50F	50 flange	42	-	-	920	43		9.1
NO: Normally open type								
SAB2S-8A	Rc1/4	10	8.9	0.4	-	2.3	Rc1/8	0.3
SAB2S-10A	Rc3/8	10	12	0.3	-	2.6		0.3
SAB2S-15A	Rc1/2	15	-	-	140	5.6		0.6
SAB2S-20A	Rc3/4	16	-	-	180	8		0.8
SAB2S-25A	Rc1	20	-	-	280	12		1.1
SAB2S-32A	Rc1 1/4	26	-	-	450	20		2.2
SAB2S-32F	32 flange	26	-	-	450	20		5.2
SAB2S-40A	Rc1 1/2	32	-	-	680	32		3.2
SAB2S-40F	40 flange	32	-	-	680	32		6.3
SAB2S-50A	Rc2	42	-	-	1020	50		5.2
SAB2S-50F	50 flange	42	-	-	1020	50		9.1
Double acting (*1)								
SAB3S-8A	Rc1/4	10	8.3(8.9)	0.4	-	2.1(2.3)	Rc1/8	0.3
SAB3S-10A	Rc3/8	10	11(12)	0.4(0.3)	-	2.5(2.6)		0.3
SAB3S-15A	Rc1/2	15	-	-	120(140)	5.5(5.6)		0.6
SAB3S-20A	Rc3/4	16	-	-	150(180)	7(8)		0.8
SAB3S-25A	Rc1	20	-	-	240(280)	11(12)		1.1
SAB3S-32A	Rc1 1/4	26	-	-	390(450)	18.5(20)		2.2
SAB3S-32F	32 flange	26	-	-	390(450)	18.5(20)		5.2
SAB3S-40A	Rc1 1/2	32	-	-	610(680)	29(32)		3.2
SAB3S-40F	40 flange	32	-	-	610(680)	29(32)		6.3
SAB3S-50A	Rc2	42	-	-	920(1020)	43(50)		5.2
SAB3S-50F	50 flange	42	-	-	920(1020)	43(50)		9.1

*1 : ( ) of C, b and S columns of double acting shows the flow rates of when port A is pressurized.
*2 : Effective cross-sectional area S and sonic conductance C are converted as S ≈ 5.0 x C.
*3 : Female thread is available in G thread and NPT thread.

How to order

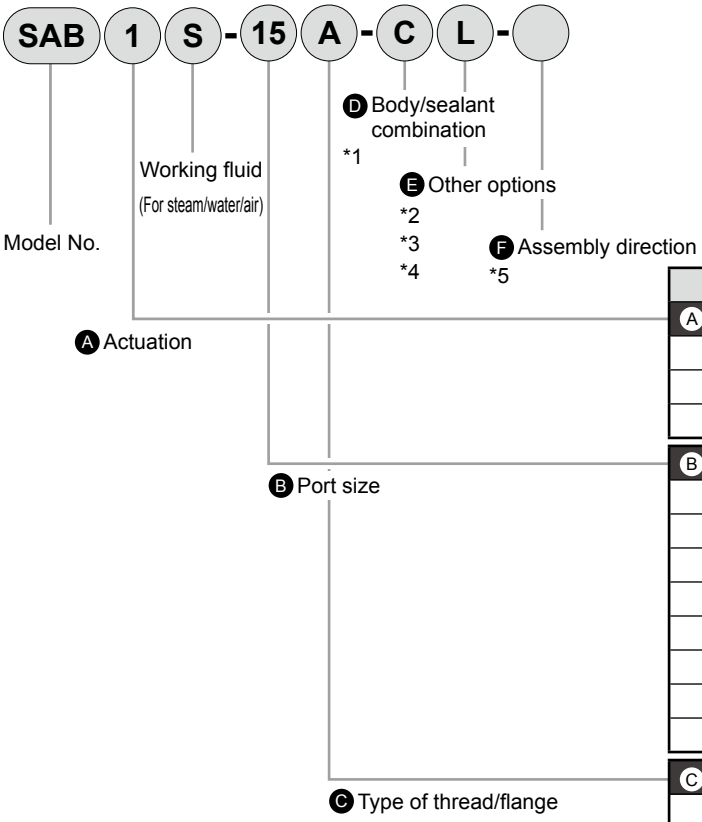

Code	Content
Ⓐ Actuation	
1	NC
2	NO
3	Double acting
Ⓑ Port size	
8	1/4
10	3/8
15	1/2
20	3/4
25	1
32	1 1/4, 32 (Flange)
40	1 1/2, 40 (Flange)
50	2, 50 (Flange)
Ⓒ Type of thread/flange	
A	Rc(8A to 50A)
F	Flange (32F to 50F)
G	G(8G to 50G)
N	NPT(8N to 50N)

Ⓓ Body/sealant combination

	Body	Seal	O-ring	Remarks
C	Bronze	Tetrafluoroethylene resin	Fluoro rubber	Steam/air/ water
E	Stainless steel	Tetrafluoroethylene resin	Fluoro rubber	
F	Stainless steel	Tetrafluoroethylene resin	Tetrafluoroethylene resin	Solvent-based

Ⓔ Other options	
Blank	No option
B	Mounting plate *2
L	With indicator
Ⓕ Assembly direction	
Blank	No option
R	Mounting plate assembly position reversed

Refer to the figure below for the layout drawing.

⚠ Precautions for model No. selection

*1 : When the working fluid is steam, select C or E.
*2 : The mounting plate (Item Ⓔ B) can be attached to only the female thread of port size 8 to 32.
*3 : Indicator (Item Ⓔ L) can be attached to only the NC (actuation 1).
*4 : To add both the mounting plate and indicator options, specify Item Ⓔ as BL.
*5 : Reversed mounting plate (Item Ⓔ B-R) is available for port size 15 to 32.
*6 : Clockwise when viewed from above with the port A on the right.

[Example of model No.]

SAB1S-15A-CL

Model: SAB

Ⓐ Actuation : NC
Ⓑ Port size : 1/2
Ⓒ Type of thread/flange : Rc
Ⓓ Body/sealant combination : Body - bronze, sealant - tetrafluoroethylene resin
Ⓔ Other options : Indicator
Ⓕ Assembly direction : No option

Item Ⓕ Assembly direction

SAB [Air operated] *2/6

Code	B (with mounting plate)	B-R *5
Direction	No rotation	Mounting plate reversed
Layout	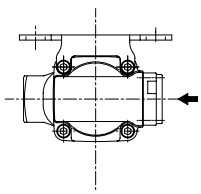	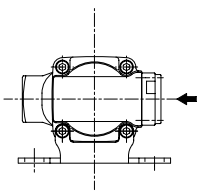

⬅shows pilot port IN.

Internal structure and parts list

● SAB1S

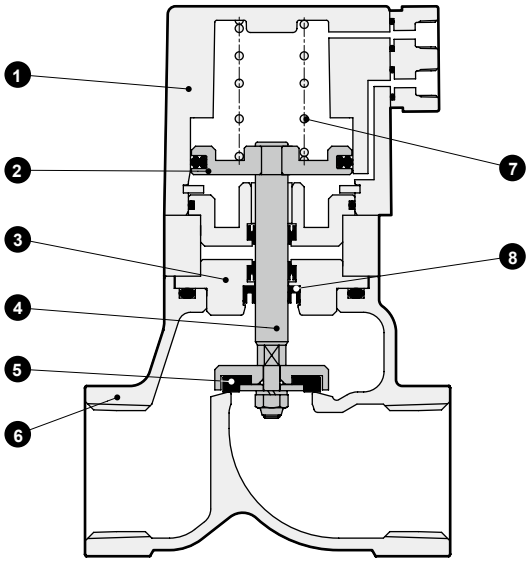

No.	Part name	Material	
1	Cylinder guard	ADC12	Aluminum die-casting
2	Piston	A2017	Aluminum
3	Adaptor	C3604(SUS304)	Copper alloy (stainless steel)
4	Piston rod	SUS304	Stainless steel
5	Main valving element	PTFE	Tetrafluoroethylene resin
6	Body	CAC408(SCS13)	Bronze casting (stainless steel casting)
7	Spring	SWP	Piano wire
8	Rod packing	PTFE	Tetrafluoroethylene resin

( ) shows options.

Dimensions

● SAB*S-8* to 50* (female thread)

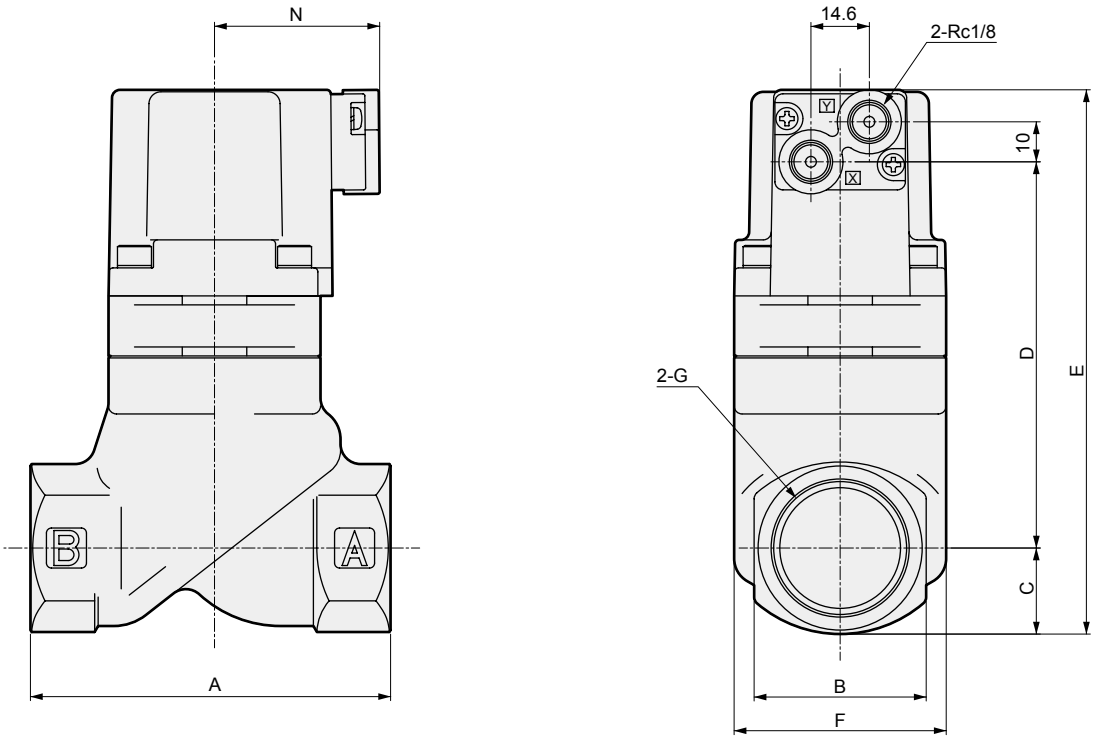

Model No.	A	B	C	D	E	F	G	N
SAB*S-8A/G/N	50	24	12	52.5	82.5	32	Rc1/4 / G1/4 / 1/4-18NPT	37(42)
SAB*S-10A/G/N							Rc3/8 / G3/8 / 3/8-18NPT	
SAB*S-15A/G/N	71	28	14.5	77.5	110	43	Rc1/2 / G1/2 / 1/2-14NPT	38(43)
SAB*S-20A/G/N	80	35	17.5	87	122.5	43	Rc3/4 / G3/4 / 3/4-14NPT	38(43)
SAB*S-25A/G/N	90	43	21	98	137	53	Rc1/G1/1-11.5NPT	41.5(46.5)
SAB*S-32A/G/N	125	55	27.5	124.5	170	63	Rc1 1/4 / G1 1/4 / 1 1/4-11.5 NPT	46(51)
SAB*S-40A/G/N	140	61	30.5	150.5	199	77	Rc1 1/2 / G1 1/2 / 1 1/2-11.5 NPT	53(58)
SAB*S-50A/G/N	160	76	38	184	240	95	Rc2/G2/2-11.5NPT	61(66)

*1: ( ) shows values for G thread.

Dimensions

● SAB*S-32F to 50F (flange)

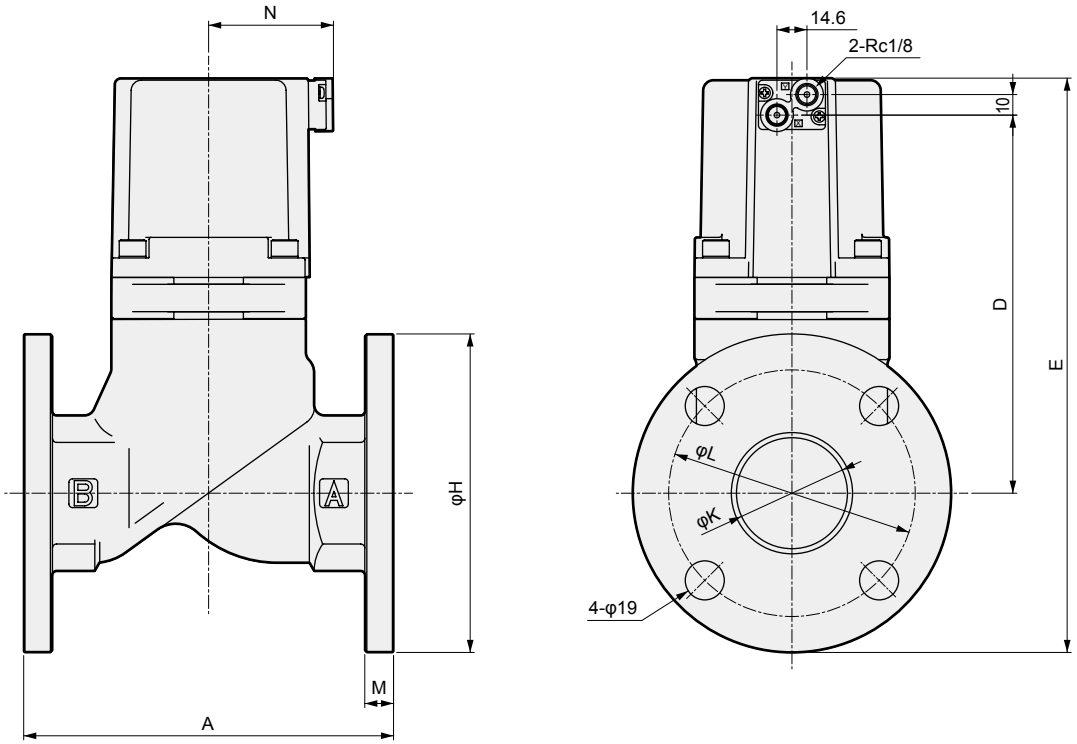

Model No.	A	D	E	H	K	L	M	N
SAB*S-32F	170	124.5	210	135	36	100	12	46
SAB*S-40F	180	150.5	238.5	140	42	105	12	53
SAB*S-50F	180	184	279.5	155	54	120	14	61

Optional dimensions

● Mounting plate
SAB*S-8*/10*-* B

Material: Steel
Zinc plated

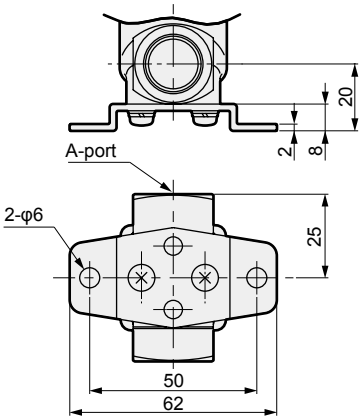

● Mounting plate
SAB*S-15* to 32*-* B / B-R

Material: Steel
Zinc plated

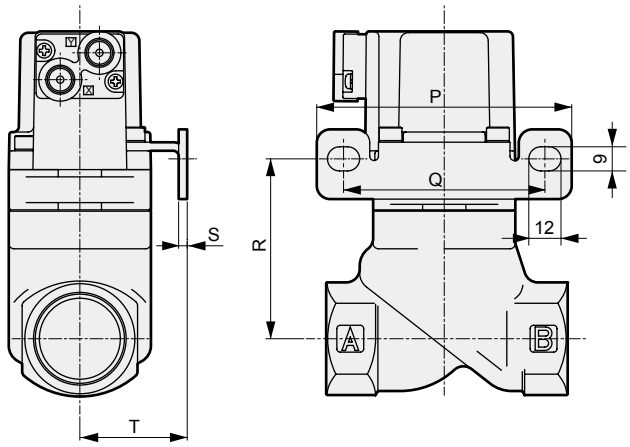

● Indicator
SAB1S-8* to 50*-* L

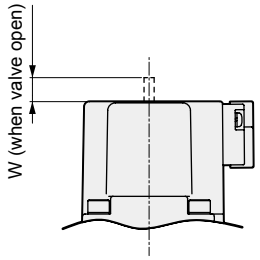

Model No.	W
SAB1S-8A/G/N	4
SAB1S-10A/G/N	4
SAB1S-15A/G/N	6.5
SAB1S-20A/G/N	6.5
SAB1S-25A/G/N	7
SAB1S-32A/G/N/F	8
SAB1S-40A/G/N/F	10.5
SAB1S-50A/G/N/F	13

* The figure shows B .

Model No.	P	Q	R	S	T
SAB*S-15A/G/N	90	70	55	2.3	30
SAB*S-20A/G/N	90	70	64.5	2.3	30
SAB*S-25A/G/N	95	75	68.5	3.2	40
SAB*S-32A/G/N	105	85	81.5	3.2	45

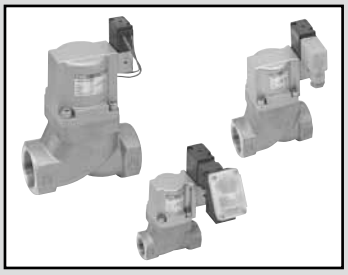

Air operated 2-port valve with solenoid valve (cylinder valve)

SVB*W Series

- NC, NO
- Port size: Rc1/4 to Rc2, 32 to 80 flange
- Working fluids: Water, non-corrosive liquid

JIS symbol

● NC

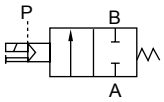

● NO

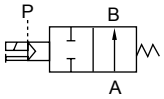

Common specifications

Descriptions		SVB1W	SVB2W
Actuation		NC	NO
Working fluid		Water/non-corrosive liquid (*1)	
Fluid viscosity	mm^2/s	500 or less	
Working pressure	MPa	0 (≈0 psi) to 0.7 (≈100 psi)(*2)	0 (≈0 psi) to 1 (≈150 psi)
Proof pressure (water pressure)	MPa	2.0 (≈290 psi, 20 bar)	
Fluid temperature	°C	-10 (14°F) to 60 (140°F) (no freezing)	
Ambient temperature	°C	-10 (14°F) to 60 (140°F)	
Valve seat leakage	cm^3/min	0 (water pressure)	
Mounting orientation		Unrestricted	
Pilot fluid		Air	
Water hammer value (reference)	MPa	1 (≈150 psi, 10 bar) or less (according to the Water Supply Act)	

*1 : Refer to the working fluid check list on Intro Page 39.
*2 : Note that this differs with the type, so refer to the working pressure in the individual specifications.

Electrical specifications			
Rated voltage		100 VAC (50/60 Hz) / 110 VAC (60 Hz), 200 VAC (50/60 Hz) / 220 VAC (60 Hz), 24 VDC	
Apparent power (VA)	When holding	3.6(50 Hz), 2.8(60 Hz)	
	When starting	11(50 Hz), 9(60 Hz)	
Power consumption (W)	AC	1.9(50 Hz), 1.5(60 Hz)	
	DC	2.0	
Thermal class		Class 130 (B)	
Degree of protection (IEC standards 529)		Grommet lead wire	IPX2
		With DIN terminal box (Pg9)	IPX5
		With T type terminal box (G1/2)	IPX5

*1: Use the product within ±10% of the rated voltage.

Individual specifications

1 MPa = 10 bar

Descriptions / Model No.	Port size	Orifice size (mm)	Cv	Working pressure (MPa)		Pilot pressure (MPa)		Pilot port size	Weight (kg)	
				NC	NO	NC	NO		NC	NO
SVB*W-8A	Rc1/4	10	2.3	0 (≈0 psi) to 0.7 (≈100 psi)	0 (≈0 psi) to 1 (≈150 psi)	0.35 (≈51 psi) to 0.7 (≈100 psi)	(*1)	Rc1/8	0.5	
SVB*W-10A	Rc3/8	10	2.6						0.5	
SVB*W-15A	Rc1/2	15	5.6						0.8	
SVB*W-20A	Rc3/4	16	8						1	
SVB*W-25A	Rc1	20	12						1.3	
SVB*W-32A	Rc1 1/4	26	20	0 (≈0 psi) to 0.5 (≈73 psi)	0 (≈0 psi) to 1 (≈150 psi)	0.25 (≈36 psi) to 0.7 (≈100 psi)	(*1)		2.5	2.4
SVB*W-32F	32 flange	26	20						5.5	5.4
SVB*W-40A	Rc1 1/2	32	32						3.6	3.4
SVB*W-40F	40 flange	32	32						6.7	6.5
SVB*W-50A	Rc2	42	50						5.7	5.4
SVB*W-50F	50 flange	42	50						9.6	9.3
SVB*W-65F(*2)	65 flange	65	70						20.5	19
SVB*W-80F(*2)	80 flange	79	100						25	23

*1 : Refer to page 568 for pilot air pressure for the NO.
*2 : Port sizes 65 flange/80 flange are custom order products.
*3 : Female thread is available in G thread and NPT thread.

How to order

● With solenoid valve

SVB 1 W - 15 A - B 2G S - ( ) - AC100V

- SVB: Model No.
- 1: Ⓐ Actuation
- W: Working fluid (for water and liquids)
- 15: Ⓑ Port size
- A: Ⓒ Type of thread/flange
- B: Ⓓ Body/sealant combination *1
- 2G: Ⓔ Coil
- S: Ⓕ Other options *2 *3 *4 *5
- ( ): Ⓖ Assembly direction *6
- AC100V: Ⓗ Voltage

Code	Content
Ⓐ Actuation	
1	NC
2	NO
Ⓑ Port size	
8	1/4
10	3/8
15	1/2
20	3/4
25	1
32	1 1/4, 32 (Flange)
40	1 1/2, 40 (Flange)
50	2, 50 (Flange)
65	65 (Flange) (custom order product)
80	80 (Flange) (custom order product)
Ⓒ Type of thread/flange	
A	Rc(8A to 50A)
F	Flange (32F to 80F)
G	G(8G to 50G)
N	NPT(8N to 50N)

Ⓓ Body/sealant combination

		Body	Seal
0	Standard	Bronze	Nitrile rubber
B	Option	Bronze	Fluoro rubber
P	Option	Bronze	Ethylene propylene rubber
D	Option	Stainless steel	Nitrile rubber
E	Option	Stainless steel	Fluoro rubber
R	Option	Stainless steel	Ethylene propylene rubber

Ⓔ Coil		
2C	Standard	Grommet lead wire
2G	Option	With DIN terminal box (Pg9)
2H	Option	DIN terminal box with lamp (Pg9)
3T	Option	With T type terminal box (G1/2)
3R	Option	T type terminal box with lamp (G1/2)

Ⓕ Other options	
Blank	No option
S	With surge suppressor
B	Mounting plate *2

Ⓖ Assembly direction	
Blank	No option
X	Cylinder cover rotated 90°
Y	Cylinder cover rotated 180°
Z	Cylinder cover rotated 270°
R	Coil reversed 180° (with solenoid valve) Mounting plate/coil reversed 180° (with solenoid valve)

Refer to the next page for the layout drawing.

Ⓗ Voltage	
AC100V	100 VAC 50/60 Hz 110 VAC 60 Hz
AC200V	200 VAC 50/60 Hz 220 VAC 60 Hz
DC24V	24 VDC

⚠ Precautions for model No. selection

*1 : The body/sealant combination code is O or B for port size 65F and 80F. Note that the body is made of cast iron.
*2 : The mounting plate (Item Ⓕ B) can be attached to only the female thread of port size 8 to 32.
*3 : To add both the surge suppressor and mounting plate options, specify Ⓕ as SB.
*4 : The surge suppressor is attached with the lead wire coil. When selecting a coil with a terminal box, the surge suppressor is mounted in the terminal box.
*5 : Manual override (non-locking) is provided as standard.
*6 : Assembly direction option can be selected for 8 to 50 only.

[Example of model No.]

SVB1W-15A-B2GS-AC100V

Model: SVB

Ⓐ Actuation	: NC
Ⓑ Port size	: 1/2
Ⓒ Type of thread/flange	: Rc
Ⓓ Body/sealant combination	: Body - bronze, sealant - fluoro rubber
Ⓔ Coil	: With DIN terminal box (Pg9)
Ⓕ Other options	: With surge suppressor
Ⓖ Assembly direction	: No option
Ⓗ Voltage	: 100 VAC 50/60 Hz, 110 VAC 60 Hz

Item Ⓖ Assembly direction

SVB [With solenoid valve] *7					
Code	Blank (standard)	X *6	Y *6	Z *6	R *6
Direction	No rotation	Cylinder cover rotated 90°	Cylinder cover rotated 180°	Cylinder cover rotated 270°	Coil reversed
Layout	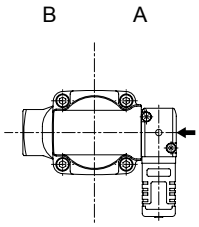	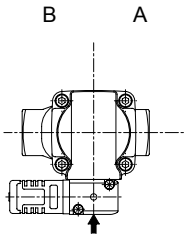	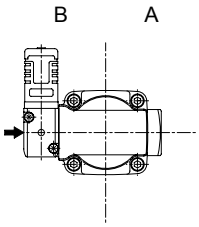	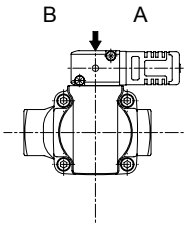	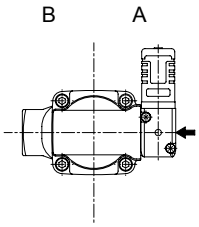

SVB [With solenoid valve] *2/7					
Code	B (with mounting plate)	B-X *6	B-Y *6/8	B-Z *6/8	B-R *6/9
Direction	No rotation	Cylinder cover rotated 90°	Cylinder cover rotated 180° Mounting plate reversed	Cylinder cover rotated 270° Mounting plate reversed	Coil reversed Mounting plate reversed
Layout	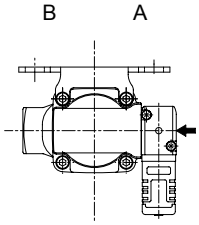	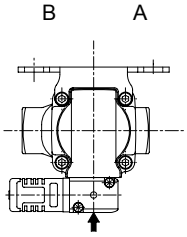	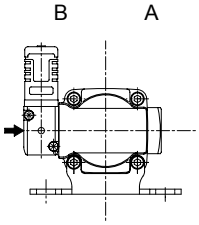	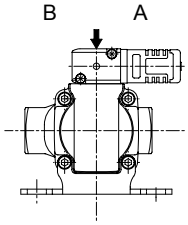	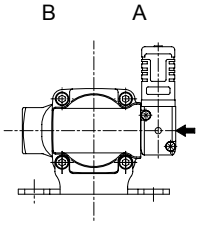

*7 : Clockwise angle when viewed from above with the port A on the right.
*8 : The mounting plate will be reversed 180° and attached.
*9 : The mounting plate for port size 10A is installed at the bottom, so only the coil position is reversed.

← shows pilot port IN.

EXA
FWD
HNB/G
USB/G
FAB/G
FGB/G
FVB
FWB/G
FHB
FLB
AB
AG
AP/AD
APK/ADK
DryAir
EX-XPLNprf
XPLNprf
HVB/HVL
S⇕B/NAB
LAD/NAD
Water-Rela
NP/NAP/NVP
SNP
CHB/G
MXB/G
Other valves
SWD/MWD
DustColl
CVE/CVSE
CCH/CPE/D
LifeSci
Gas-Combus
Auto-Water
SpecFld
Custom
Ending

Internal structure and parts list

● SVB1W

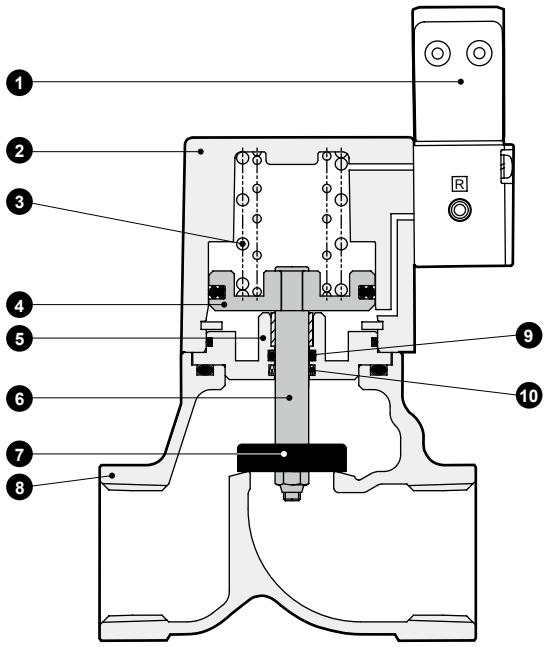

No.	Part name	Material	
1	Pilot solenoid valve	-	-
2	Cylinder guard	ADC12	Aluminum die-casting
3	Spring	SWP	Piano wire
4	Piston	A2017	Aluminum
5	Adaptor	C3604(SUS304)	Copper alloy (stainless steel)
6	Piston rod	SUS304	Stainless steel
7	Main valving element	NBR(FKM, EPDM) SUS304	Nitrile rubber (fluoro rubber, ethylene propylene rubber) stainless steel
8	Body	CAC408(SCS13)	Bronze casting (stainless steel casting)
9	O-ring	NBR(FKM, EPDM)	NBR (FPM, EPM rubber)
10	MY packing	NBR(FKM, EPDM)	NBR (FPM, EPM rubber)

*1 : ( ) shows options.
*2 : For 65F and 80F, the body is FC250 (cast iron), and the main valving element material is FKM.

Dimensions

● SVB*W-8* to 50*-*2C (female thread)
Grommet lead wire

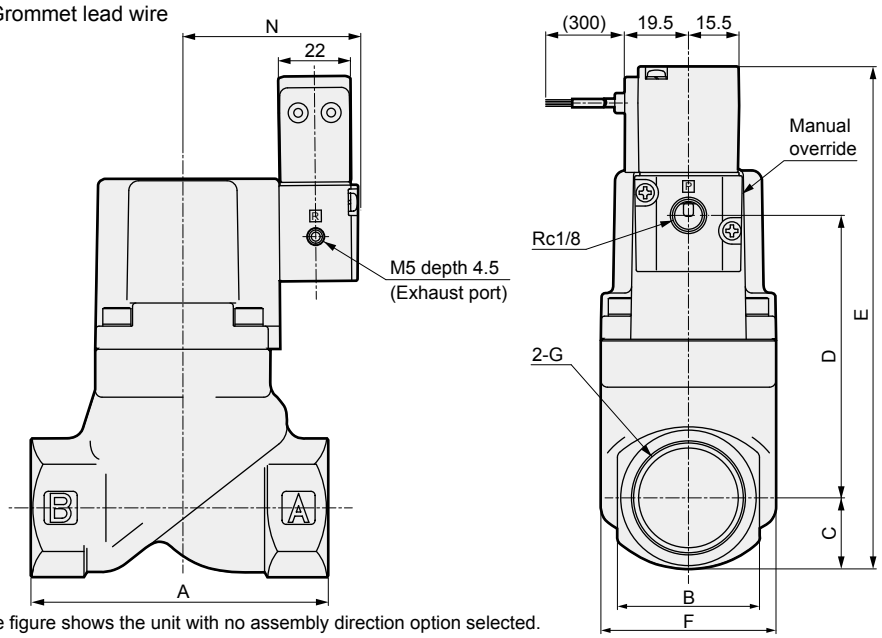

● G thread conversion connector

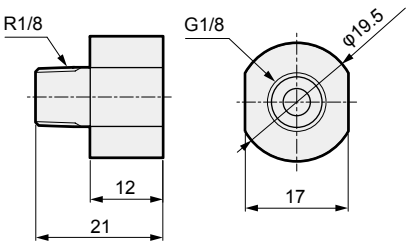

* The figure shows the unit with no assembly direction option selected.

Model No.	A	B	C	D	E	F	G	N
SVB*W-8A/G/N	50	24	12	45.5	102.5	32	Rc1/4 / G1/4 / 1/4-18NPT	48.5
SVB*W-10A/G/N							Rc3/8 / G3/8 / 3/8-18NPT	
SVB*W-15A/G/N	71	28	14.5	65.5	125	43	Rc1/2 / G1/2 / 1/2-14NPT	49.5
SVB*W-20A/G/N	80	35	17.5	75	137.5	43	Rc3/4 / G3/4 / 3/4-14NPT	49.5
SVB*W-25A/G/N	90	43	21	85.5	151.5	53	Rc1/G1/1-11.5NPT	53
SVB*W-32A/G/N	125	55	27.5	113.5	186	63	Rc1 1/4 / G1 1/4 / 1 1/4-11.5 NPT	57.5
SVB*W-40A/G/N	140	61	30.5	134.5	210	77	Rc1 1/2 / G1 1/2 / 1 1/2-11.5 NPT	64.5
SVB*W-50A/G/N	160	76	38	168	251	95	Rc2/G2/2-11.5NPT	72.5

*1: For G thread, a G thread conversion connector is inserted to port P.

● SVB*W-32F to 80F-*2C (flange)
Grommet lead wire

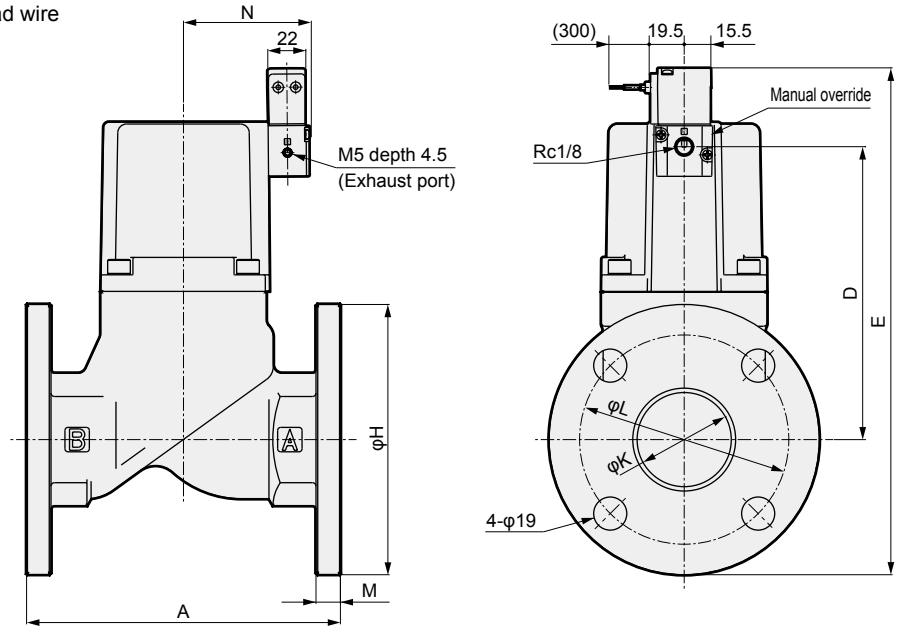

● 80F

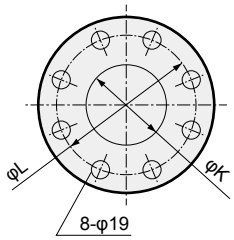

* The figure shows the unit with no assembly direction option selected.

Model No.	A	D	E	H	K	L	M	N
SVB*W-32F	170	113.5	226	135	36	100	12	57.5
SVB*W-40F	180	134.5	249.5	140	42	105	12	64.5
SVB*W-50F	180	168	291	155	54	120	14	72.5
SVB*W-65F	210	203	347.5	175	68	140	16	113
SVB*W-80F	240	218	367.5	185	82	150	16	123

EXA
FWD
HNB/G
USB/G
FAB/G
FGB/G
FVB
FWB/G
FHB
FLB
AB
AG
AP/AD
APK/ADK
DryAir
EX-XPLNprf
XPLNprf
HVB/HVL
S⇕B/NAB
LAD/NAD
Water-Rela
NP/NAP/NVP
SNP
CHB/G
MXB/G
Other valves
SWD/MWD
DustColl
CVE/CVSE
CCH/CPE/D
LifeSci
Gas-Combus
Auto-Water
SpecFld
Custom
Ending

Optional dimensions

CAD

● DIN terminal box (Pg9) DIN terminal box with lamp (Pg9)
SVB*W-*-* 2G 2H

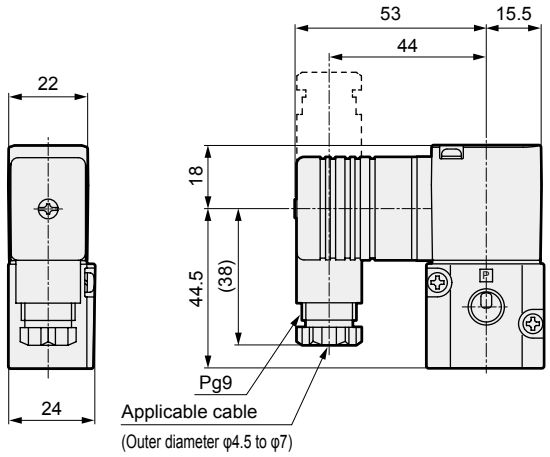

● T type terminal box (G1/2) T type terminal box with lamp (G1/2)
SVB*W-*-* 3T 3R

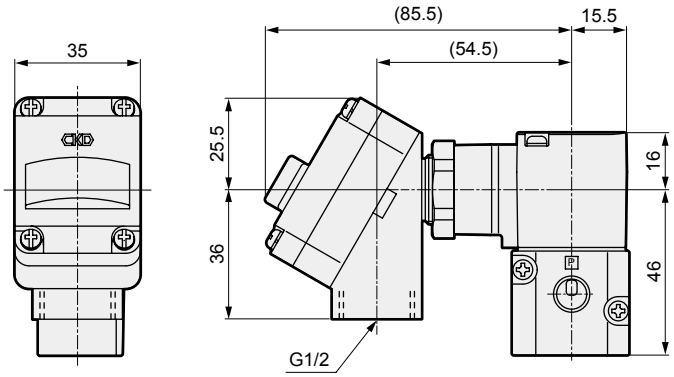

● Mounting plate
SVB*W-8*/10*-** B

Material: Steel
Zinc plated

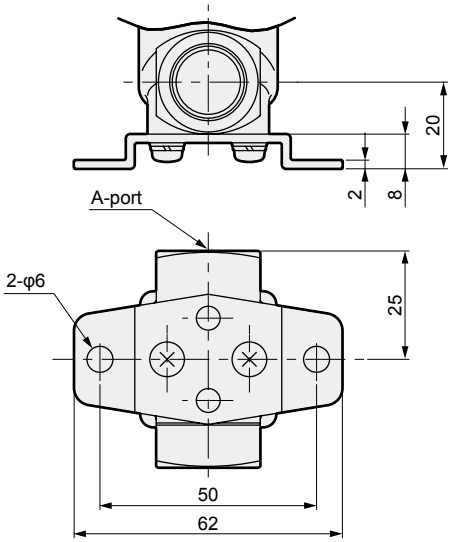

* Use the body mounting screws if fixing without a mounting plate.
(Thread size: M4 depth 8 pitch 19)

Optional dimensions

● Mounting plate
SVB*W-15* to 32*-** B / B-R / B-Y

Material: Steel
Zinc plated

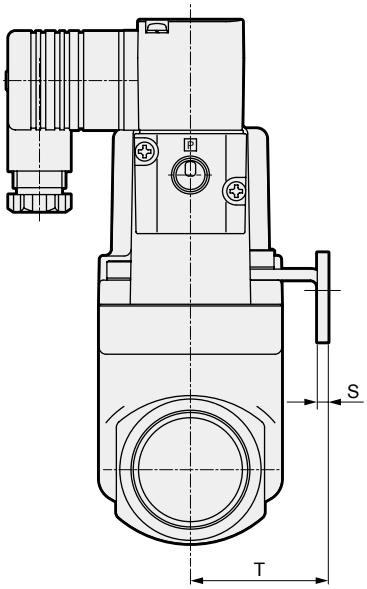

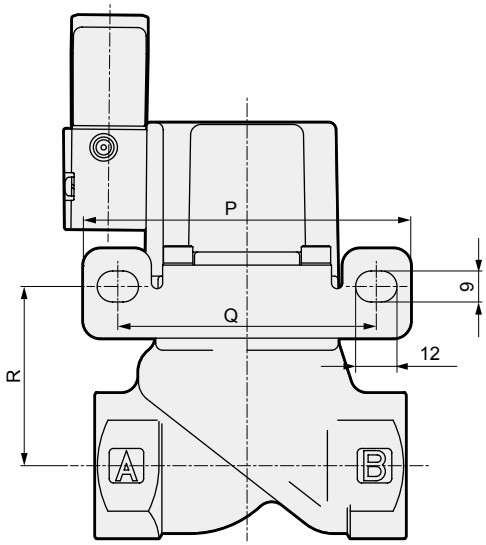

* The figure shows B .

● Mounting plate
SVB*W-15* to 32*-** B-X / B-Z

Material: Steel
Zinc plated

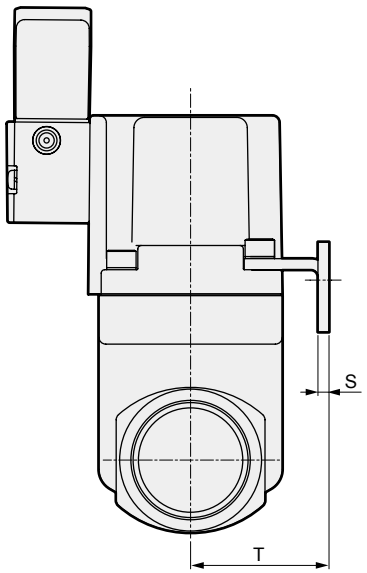

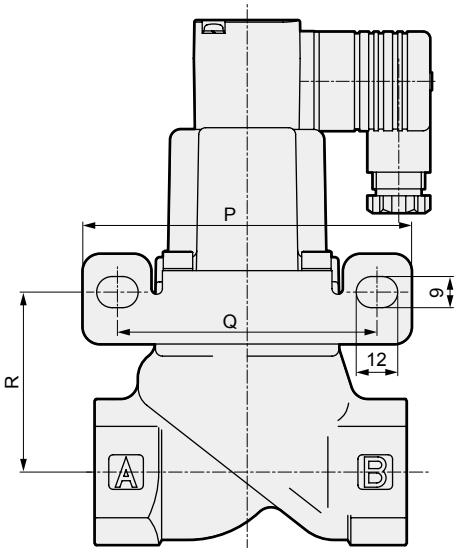

* The figure shows B-X .

Model No.	P	Q	R	S	T
SVB*W-15A/G/N	90	70	39	2.3	30
SVB*W-20A/G/N	90	70	48.5	2.3	30
SVB*W-25A/G/N	95	75	52	3.2	40
SVB*W-32A/G/N	105	85	66.5	3.2	45

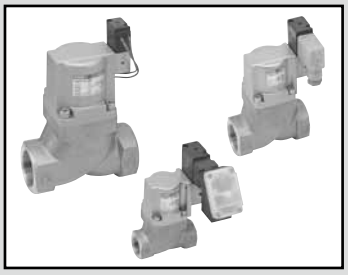

Air operated 2-port valve with solenoid valve (cylinder valve)

SVB*A Series

- NC, NO
- Port size: Rc1/4 to Rc2, 32 to 80 flange
- Working fluid: Air, inert gas

JIS symbol

● NC

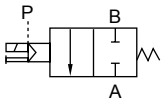

● NO

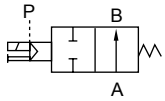

Common specifications

Descriptions	SVB1A	SVB2A
Actuation	NC	NO
Working fluid	Air/inert gas (*1)	
Working pressure MPa	0 (≈0 psi, 0 bar) to 0.9 (≈130 psi, 9 bar)	0 (≈0 psi, 0 bar) to 1 (≈150 psi, 10 bar)
Proof pressure (water pressure) MPa	2.0 (≈290 psi, 20 bar)	
Fluid temperature °C	-10 (14°F) to 60 (140°F) (no freezing)	
Ambient temperature °C	-10 (14°F) to 60 (140°F)	
Valve seat leakage cm^3/min	0.12 or less (pneumatic pressure)	
Pilot fluid	Air	
Pilot pressure MPa	0.35 (≈51 psi, 3.5 bar) to 0.7 (≈100 psi, 7 bar)	Refer to page 568.
Mounting orientation	Unrestricted	

*1: Refer to the working fluid check list on Intro Page 39.

Electrical specifications			
Rated voltage		100 VAC (50/60 Hz) / 110 VAC (60 Hz), 200 VAC (50/60 Hz) / 220 VAC (60 Hz), 24 VDC	
Apparent power (VA)	When holding	3.6(50 Hz), 2.8(60 Hz)	
	When starting	11(50 Hz), 9(60 Hz)	
Power consumption (W)	AC	1.9(50 Hz), 1.5(60 Hz)	
	DC	2.0	
Thermal class		Class 130 (B)	
Degree of protection (IEC standards 529)		Grommet lead wire	IPX2
		With DIN terminal box (Pg9)	IPX5
		With T type terminal box (G1/2)	IPX5

*1: Use the product within ±10% of the rated voltage.

Individual specifications

Descriptions / Model No.	Port size	Orifice size (mm)	C [dm^3/(s·bar)]	b	S (mm^2)	Allowable back pressure (MPa)	Pilot port size	Weight (kg)
NC								
SVB1A-8A	Rc1/4	10	8.3	0.4	-	0.5 (≈73 psi, 5 bar)	Rc1/8	0.5
SVB1A-10A	Rc3/8	10	11	0.4	-			0.5
SVB1A-15A	Rc1/2	15	-	-	120	0.1 (≈15 psi, 1 bar)		0.8
SVB1A-20A	Rc3/4	16	-	-	150			1
SVB1A-25A	Rc1	20	-	-	240			1.3
SVB1A-32A	Rc1 1/4	26	-	-	390			2.4
SVB1A-32F	32 flange	26	-	-	390			5.4
SVB1A-40A	Rc1 1/2	32	-	-	610			3.4
SVB1A-40F	40 flange	32	-	-	610			6.5
SVB1A-50A	Rc2	42	-	-	920			5.4
SVB1A-50F	50 flange	42	-	-	920			9.3
SVB1A-65F(*2)	65 flange	65	-	-	1290			19.5
SVB1A-80F(*2)	80 flange	79	-	-	1840			23.5
NO								
SVB2A-8A	Rc1/4	10	8.9	0.4	-	0.1 (≈15 psi, 1 bar)	Rc1/8	0.5
SVB2A-10A	Rc3/8	10	12	0.3	-			0.5
SVB2A-15A	Rc1/2	15	-	-	140			0.8
SVB2A-20A	Rc3/4	16	-	-	180			1
SVB2A-25A	Rc1	20	-	-	280			1.3
SVB2A-32A	Rc1 1/4	26	-	-	450	0.05 (≈7.3 psi, 0.5 bar)		2.4
SVB2A-32F	32 flange	26	-	-	450			5.4
SVB2A-40A	Rc1 1/2	32	-	-	680			3.4
SVB2A-40F	40 flange	32	-	-	680			6.5
SVB2A-50A	Rc2	42	-	-	1020			5.4
SVB2A-50F	50 flange	42	-	-	1020			9.3
SVB2A-65F(*2)	65 flange	65	-	-	1290			19
SVB2A-80F(*2)	80 flange	79	-	-	1840			23

*1 : Refer to page 568 for pilot air pressure for the NO.
*2 : Port sizes 65 flange/80 flange are custom order products.
*3 : Effective cross-sectional area S and sonic conductance C are converted as S ≈ 5.0 x C.
*4 : Female thread is available in G thread and NPT thread.

How to order

● With solenoid valve

SVB 1 A - 15 A - B 2G S - ( ) - AC100V

- SVB: Model No.
- 1: Working fluid (For air/gas)
- A: Ⓐ Actuation
- 15: Ⓑ Port size
- A: Ⓒ Type of thread/flange
- B: Ⓓ Body/sealant combination *1
- 2G: Ⓔ Coil
- S: Ⓕ Other options *2 *3 *4 *5
- ( ): Ⓖ Assembly direction *6
- AC100V: Ⓗ Voltage

Code	Content
Ⓐ Actuation	
1	NC
2	NO
Ⓑ Port size	
8	1/4
10	3/8
15	1/2
20	3/4
25	1
32	1 1/4, 32 (Flange)
40	1 1/2, 40 (Flange)
50	2, 50 (Flange)
65	65 (Flange) (custom order product)
80	80 (Flange) (custom order product)
Ⓒ Type of thread/flange	
A	Rc(8A to 50A)
F	Flange (32F to 80F)
G	G(8G to 50G)
N	NPT(8N to 50N)

Ⓓ Body/sealant combination

		Body	Seal
0	Standard	Bronze	Nitrile rubber
B	Option	Bronze	Fluoro rubber
P	Option	Bronze	Ethylene propylene rubber
D	Option	Stainless steel	Nitrile rubber
E	Option	Stainless steel	Fluoro rubber
R	Option	Stainless steel	Ethylene propylene rubber

Ⓔ Coil		
2C	Standard	Grommet lead wire
2G	Option	With DIN terminal box (Pg9)
2H	Option	DIN terminal box with lamp (Pg9)
3T	Option	With T type terminal box (G1/2)
3R	Option	T type terminal box with lamp (G1/2)

Code	Content
Ⓕ Other options	
Blank	No option
S	With surge suppressor
B	Mounting plate *2
Ⓖ Assembly direction	
Blank	No option
X	Cylinder cover rotated 90°
Y	Cylinder cover rotated 180°
Z	Cylinder cover rotated 270°
R	Coil reversed 180° (with solenoid valve) Mounting plate/coil reversed 180° (with solenoid valve)

Refer to page 525 for the layout drawing.

Ⓗ Voltage	
AC100V	100 VAC 50/60 Hz 110 VAC 60 Hz
AC200V	200 VAC 50/60 Hz 220 VAC 60 Hz
DC24V	24 VDC

⚠ Precautions for model No. selection

*1 : The body/sealant combination code is O or B for port size 65F and 80F. Note that the body is made of cast iron.
*2 : The mounting plate (Item Ⓕ B) can be attached to only the female thread of port size 8 to 32.
*3 : To add both the surge suppressor and mounting plate options, specify Ⓕ as SB.
*4 : The surge suppressor is attached with the lead wire coil. When selecting a coil with a terminal box, the surge suppressor is mounted in the terminal box.
*5 : Manual override (non-locking) is provided as standard.
*6 : Assembly direction option can be selected for 8 to 50 only.

[Example of model No.]

SVB1A-15A-B2GS-AC100V

Model: SVB

Ⓐ Actuation	: NC
Ⓑ Port size	: 1/2
Ⓒ Type of thread/flange	: Rc
Ⓓ Body/sealant combination	: Body - bronze, sealant - fluoro rubber
Ⓔ Coil	: With DIN terminal box (Pg9)
Ⓕ Other options	: With surge suppressor
Ⓖ Assembly direction	: No option
Ⓗ Voltage	: 100 VAC 50/60 Hz, 110 VAC 60 Hz

EXA
FWD
HNB/G
USB/G
FAB/G
FGB/G
FVB
FWB/G
FHB
FLB
AB
AG
AP/AD
APK/ADK
DryAir
EX-XPLNprf
XPLNprf
HVB/HVL
S⇕B/NAB
LAD/NAD
Water-Rela
NP/NAP/NVP
SNP
CHB/G
MXB/G
Other valves
SWD/MWD
DustColl
CVE/CVSE
CCH/CPE/D
LifeSci
Gas-Combus
Auto-Water
SpecFld
Custom
Ending

Internal structure and parts list

● SVB1A

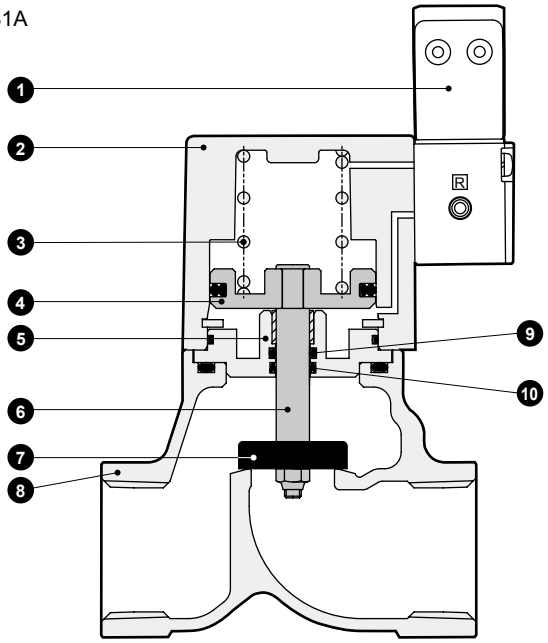

No.	Part name	Material	
1	Pilot solenoid valve	-	-
2	Cylinder guard	ADC12	Aluminum die-casting
3	Spring	SWP	Piano wire
4	Piston	A2017	Aluminum
5	Adaptor	C3604(SUS304)	Copper alloy (stainless steel)
6	Piston rod	SUS304	Stainless steel
7	Main valving element	NBR(FKM, EPDM) SUS304	Nitrile rubber (fluoro rubber, ethylene propylene rubber) stainless steel
8	Body	CAC408(SCS13)	Bronze casting (stainless steel casting)
9	O-ring	NBR(FKM, EPDM)	NBR (FPM, EPM rubber)
10	MY packing	NBR(FKM, EPDM)	NBR (FPM, EPM rubber)

*1 : ( ) shows options.
*2 : For 65F and 80F, the body is FC250 (cast iron), and the main valving element material is FKM.

Dimensions

CAD

● SVB*A-8* to 50*-*2C (female thread)
Grommet lead wire

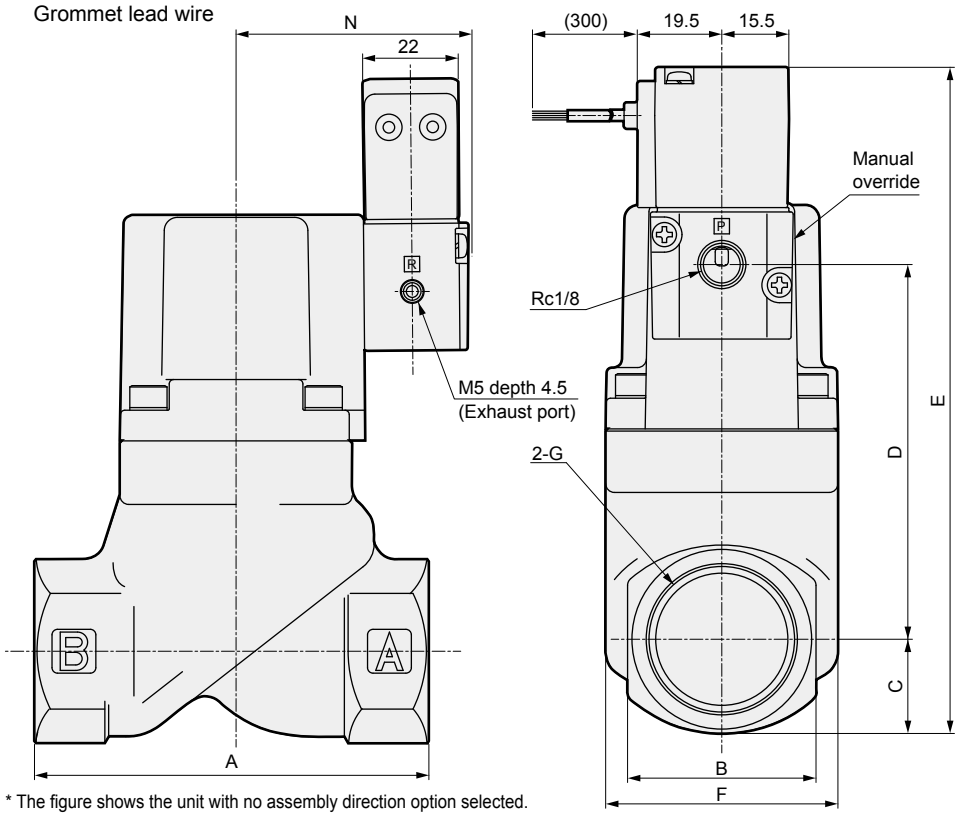

● G thread conversion connector

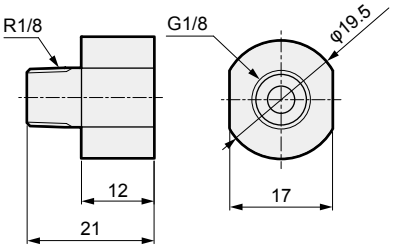

* The figure shows the unit with no assembly direction option selected.

Model No.	A	B	C	D	E	F	G	N
SVB*A-8A/G/N	50	24	12	45.5	102.5	32	Rc1/4 / G1/4 / 1/4-18NPT	48.5
SVB*A-10A/G/N							Rc3/8 / G3/8 / 3/8-18NPT	
SVB*A-15A/G/N	71	28	14.5	65.5	125	43	Rc1/2 / G1/2 / 1/2-14NPT	49.5
SVB*A-20A/G/N	80	35	17.5	75	137.5	43	Rc3/4 / G3/4 / 3/4-14NPT	49.5
SVB*A-25A/G/N	90	43	21	85.5	151.5	53	Rc1/G1/1-11.5NPT	53
SVB*A-32A/G/N	125	55	27.5	113.5	186	63	Rc1 1/4 / G1 1/4 / 1 1/4-11.5 NPT	57.5
SVB*A-40A/G/N	140	61	30.5	134.5	210	77	Rc1 1/2 / G1 1/2 / 1 1/2-11.5 NPT	64.5
SVB*A-50A/G/N	160	76	38	168	251	95	Rc2/G2/2-11.5NPT	72.5

*1: For G thread, a G thread conversion connector is inserted to port P.

Dimensions

● SVB*A-32F to 80F-*2C (flange)
Grommet lead wire

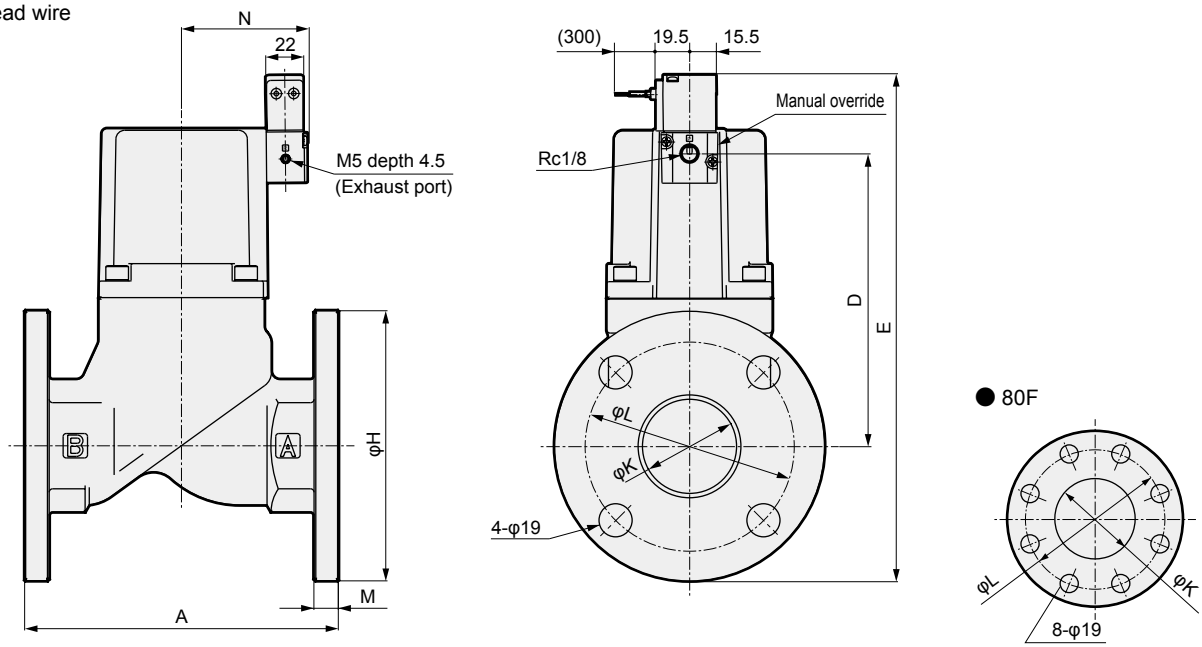

* The figure shows the unit with no assembly direction option selected.

Model No.	A	D	E	H	K	L	M	N
SVB*A-32F	170	113.5	226	135	36	100	12	57.5
SVB*A-40F	180	134.5	249.5	140	42	105	12	64.5
SVB*A-50F	180	168	291	155	54	120	14	72.5
SVB*A-65F	210	203	347.5	175	68	140	16	113
SVB*A-80F	240	218	367.5	185	82	150	16	123

Optional dimensions

Dimensions of DIN terminal box, T type terminal box and mounting plate are the same as those of SVB*W Series. Refer to pages 528 and 529.

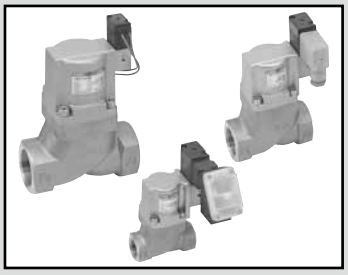

Air operated 2-port valve with solenoid valve (cylinder valve)

SVB*V Series

- NC, NO
- Port size: Rc1/4 to Rc2, 32 to 50 flange
- Working fluid: Low vacuum

Refer to the Ending for details.

JIS symbol

● NC

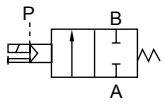

● NO

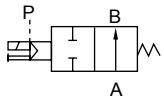

Common specifications

1 MPa ≈ 145.0 psi, 1 MPa = 10 bar

Descriptions	SVB1V	SVB2V
Actuation	NC	NO
Working fluid	Low vacuum (air, water) (*1)	
Working pressure Pa(abs)	1.3 x 10^2 to 7 x 10^5 (refer to the working pressure range in the individual specifications.)	
Proof pressure (water pressure) MPa	2.0 (≈290 psi, 20 bar)	
Fluid temperature °C	-10 (14°F) to 60 (140°F) (no freezing)	
Ambient temperature °C	-10 (14°F) to 60 (140°F)	
Valve seat leakage Pa·m^3/s He	1.33 x 10^{-3} or less	
Pilot fluid	Air	
Mounting orientation	Unrestricted	

*1: Refer to the working fluid check list on Intro Page 39.

Electrical specifications			
Rated voltage		100 VAC (50/60 Hz) / 110 VAC (60 Hz), 200 VAC (50/60 Hz) / 220 VAC (60 Hz), 24 VDC	
Apparent power (VA)	When holding	3.6(50 Hz), 2.8(60 Hz)	
	When starting	11(50 Hz), 9(60 Hz)	
Power consumption (W)	AC	1.9(50 Hz), 1.5(60 Hz)	
	DC	2.0	
Thermal class		Class 130 (B)	
Degree of protection (IEC standards 529)		Grommet lead wire	IPX2
		With DIN terminal box (Pg9)	IPX5
		With T type terminal box (G1/2)	IPX5

*1: Use the product within ±10% of the rated voltage.

Individual specifications

1 MPa ≈ 145.0 psi, 1 MPa = 10 bar

Descriptions / Model No.	Port size	Orifice size (mm)	C [dm^3/(s·bar)]	b	S (mm^2)	Working pressure Pa (abs) NC	Working pressure Pa (abs) NO	Pilot pressure (MPa) NC	Pilot pressure (MPa) NO	Pilot port size	Weight (kg) NC	Weight (kg) NO
SVB*V-8A	Rc1/4	10	8.3	0.4	-	1.3×10^2 to 7×10^5	1.3×10^2 to 1×10^6	0.35 (≈51 psi) to 0.7 (≈100 psi)	(*1)	Rc1/8	0.5	
SVB*V-10A	Rc3/8	10	12	0.3	-						0.5	
SVB*V-15A	Rc1/2	15	-	-	140						0.8	
SVB*V-20A	Rc3/4	16	-	-	180						1	
SVB*V-25A	Rc1	20	-	-	280						1.3	
SVB*V-32A	Rc1 1/4	26	-	-	450	1.3×10^2 to 5×10^5	1.3×10^2 to 1×10^6	0.25 (≈36 psi) to 0.7 (≈100 psi)	(*1)		2.5	2.4
SVB*V-32F	32 flange	26	-	-	450						5.5	5.4
SVB*V-40A	Rc1 1/2	32	-	-	680						3.6	3.4
SVB*V-40F	40 flange	32	-	-	680						6.7	6.5
SVB*V-50A	Rc2	42	-	-	1020						5.7	5.4
SVB*V-50F	50 flange	42	-	-	1020						9.6	9.3

*1 : Refer to page 568 for pilot air pressure for the NO.
*2 : Female thread is available in G thread and NPT thread.

How to order

● With solenoid valve

SVB 1 V - 15 A - B 2G S - ( ) - AC100V

- SVB: Model No.
- 1: Ⓐ Actuation
- V: Working fluid (for low vacuum)
- 15: Ⓑ Port size
- A: Ⓒ Type of thread/flange
- B: Ⓓ Body/sealant combination
- 2G: Ⓔ Coil
- S: Ⓕ Other options *1 *2 *3 *4
- ( ): Ⓖ Assembly direction
- AC100V: Ⓗ Voltage

Code	Content
Ⓐ Actuation	
1	NC
2	NO
Ⓑ Port size	
8	1/4
10	3/8
15	1/2
20	3/4
25	1
32	1 1/4, 32 (Flange)
40	1 1/2, 40 (Flange)
50	2, 50 (Flange)
Ⓒ Type of thread/flange	
A	Rc(8A to 50A)
F	Flange (32F to 50F)
G	G(8G to 50G)
N	NPT(8N to 50N)

Ⓓ Body/sealant combination

		Body	Seal
0	Standard	Bronze	Nitrile rubber
B	Option	Bronze	Fluoro rubber
P	Option	Bronze	Ethylene propylene rubber
D	Option	Stainless steel	Nitrile rubber
E	Option	Stainless steel	Fluoro rubber
R	Option	Stainless steel	Ethylene propylene rubber

Ⓔ Coil

2C	Standard	Grommet lead wire
2G	Option	With DIN terminal box (Pg9)
2H	Option	DIN terminal box with lamp (Pg9)
3T	Option	With T type terminal box (G1/2)
3R	Option	T type terminal box with lamp (G1/2)

Ⓕ Other options	
Blank	No option
S	With surge suppressor
B	Mounting plate *1

Ⓖ Assembly direction	
Blank	No option
X	Cylinder cover rotated 90°
Y	Cylinder cover rotated 180°
Z	Cylinder cover rotated 270°
R	Coil reversed 180° (with solenoid valve) Mounting plate/coil reversed 180° (with solenoid valve)

Refer to page 525 for the layout drawing.

Ⓗ Voltage	
AC100V	100 VAC 50/60 Hz 110 VAC 60 Hz
AC200V	200 VAC 50/60 Hz 220 VAC 60 Hz
DC24V	24 VDC

⚠ Precautions for model No. selection

*1 : The mounting plate (Item Ⓕ B) can be attached to only the female thread of port size 8 to 32.
*2 : To add both the surge suppressor and mounting plate options, specify Item Ⓕ as SB.
*3 : The surge suppressor is attached with the lead wire coil. When selecting a coil with a terminal box, the surge suppressor is mounted in the terminal box.
*4 : Manual override (non-locking) is provided as standard.

[Example of model No.]

SVB1V-15A-B2GS-AC100V

Model: SVB

Ⓐ Actuation	: NC
Ⓑ Port size	: 1/2
Ⓒ Type of thread/flange	: Rc
Ⓓ Body/sealant combination	: Body - bronze, sealant - fluoro rubber
Ⓔ Coil	: With DIN terminal box (Pg9)
Ⓕ Other options	: With surge suppressor
Ⓖ Assembly direction	: No option
Ⓗ Voltage	: 100 VAC 50/60 Hz, 110 VAC 60 Hz

EXA
FWD
HNB/G
USB/G
FAB/G
FGB/G
FVB
FWB/G
FHB
FLB
AB
AG
AP/AD
APK/ADK
DryAir
EX-XPLNprf
XPLNprf
HVB/HVL
S⇕B/NAB
LAD/NAD
Water-Rela
NP/NAP/NVP
SNP
CHB/G
MXB/G
Other valves
SWD/MWD
DustColl
CVE/CVSE
CCH/CPE/D
LifeSci
Gas-Combus
Auto-Water
SpecFld
Custom
Ending

Internal structure and parts list

● SVB1V

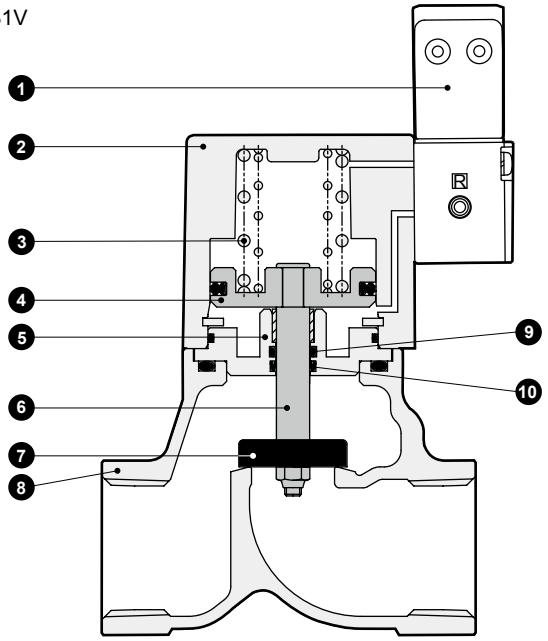

No.	Part name	Material	
1	Pilot solenoid valve	-	-
2	Cylinder guard	ADC12	Aluminum die-casting
3	Spring	SWP	Piano wire
4	Piston	A2017	Aluminum
5	Adaptor	C3604(SUS304)	Copper alloy (stainless steel)
6	Piston rod	SUS304	Stainless steel
7	Main valving element	NBR(FKM, EPDM) SUS304	Nitrile rubber (fluoro rubber, ethylene propylene rubber) stainless steel
8	Body	CAC408(SCS13)	Bronze casting (stainless steel casting)
9	O-ring	NBR(FKM, EPDM)	NBR (FPM, EPM rubber)
10	MY packing	NBR(FKM, EPDM)	NBR (FPM, EPM rubber)

( ) shows options.

Dimensions

CAD

● SVB*V-8* to 50*-*2C (female thread)
Grommet lead wire

● G thread conversion connector

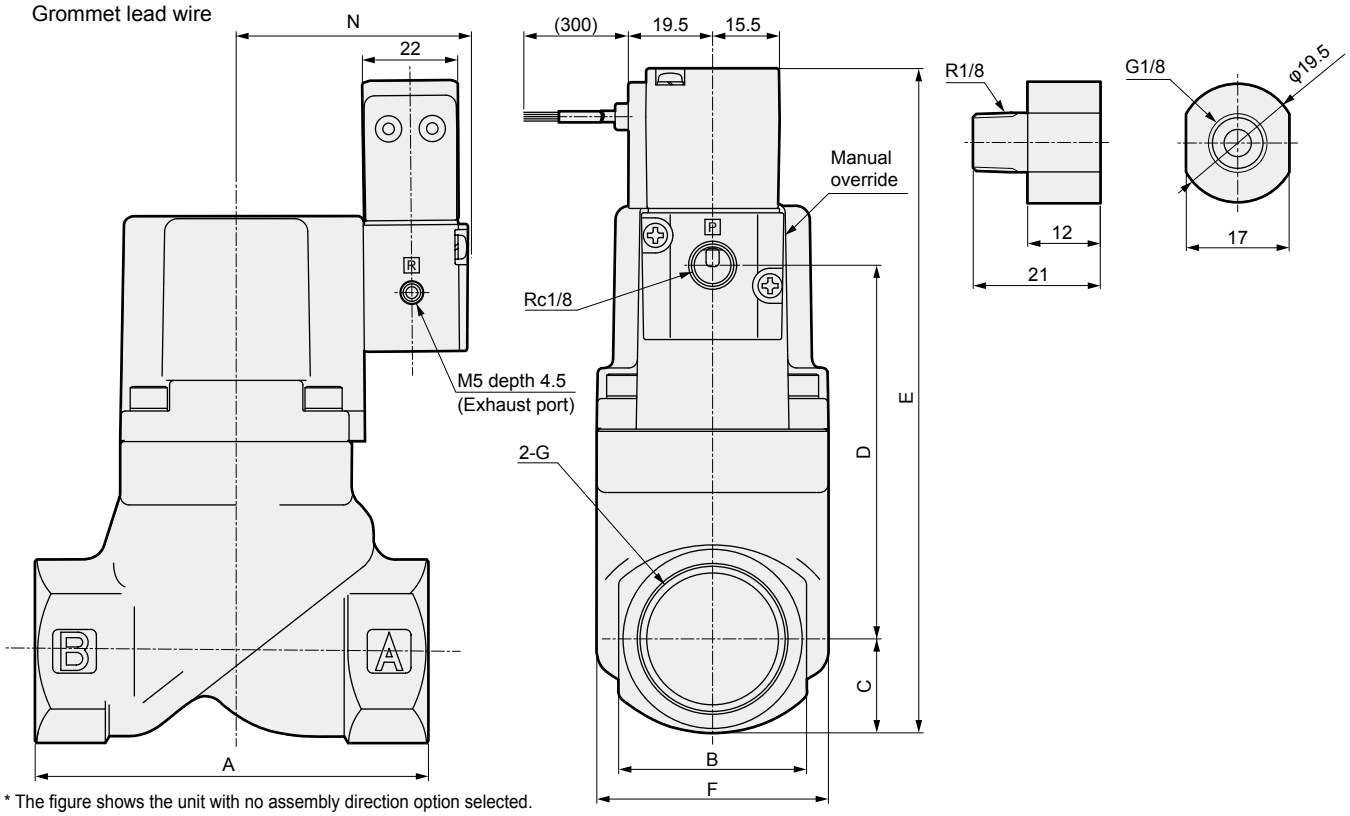

* The figure shows the unit with no assembly direction option selected.

Model No.	A	B	C	D	E	F	G	N
SVB*V-8A	50	24	12	45.5	102.5	32	Rc1/4 / G1/4 / 1/4-18NPT	48.5
SVB*V-10A							Rc3/8 / G3/8 / 3/8-18NPT	
SVB*V-15A	71	28	14.5	65.5	125	43	Rc1/2 / G1/2 / 1/2-14NPT	49.5
SVB*V-20A	80	35	17.5	75	137.5	43	Rc3/4 / G3/4 / 3/4-14NPT	49.5
SVB*V-25A	90	43	21	85.5	151.5	53	Rc1/G1/1-11.5NPT	53
SVB*V-32A	125	55	27.5	113.5	186	63	Rc1 1/4 / G1 1/4 / 1 1/4-11.5 NPT	57.5
SVB*V-40A	140	61	30.5	134.5	210	77	Rc1 1/2 / G1 1/2 / 1 1/2-11.5 NPT	64.5
SVB*V-50A	160	76	38	168	251	95	Rc2/G2/2-11.5NPT	72.5

*1: For G thread, a G thread conversion connector is inserted to port P.

Dimensions

● SVB*V-32F to 50F-*2C (flange)
Grommet lead wire

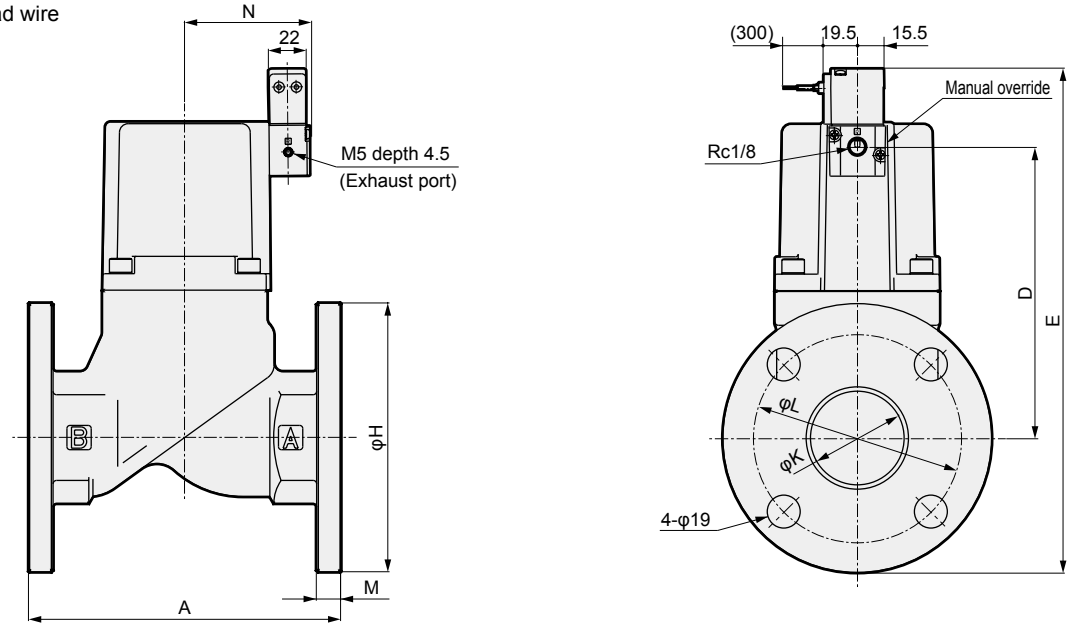

* The figure shows the unit with no assembly direction option selected.

Model No.	A	D	E	H	K	L	M	N
SVB*V-32F	170	113.5	226	135	36	100	12	57.5
SVB*V-40F	180	134.5	249.5	140	42	105	12	64.5
SVB*V-50F	180	168	291	155	54	120	14	72.5

Optional dimensions

Dimensions of DIN terminal box, T type terminal box and mounting plate are the same as those of SVB*W Series. Refer to pages 528 and 529.

Air operated 2-port valve with solenoid valve (cylinder valve)

SVB*S Series

- NC, NO
- Port size: Rc1/4 to Rc2, 32 to 50 flange
- Working fluids: Steam, water, air

Refer to the Ending for details.

JIS symbol

● NC

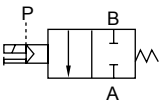

● NO

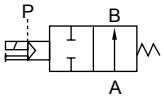

Common specifications

1 MPa = 10 bar

Descriptions	SVB1S	SVB2S
Actuation	NC	NO
Working fluid	Steam/water/air/non-corrosive liquid (*1)	
Liquid viscosity mm^2/s	500 or less	
Working pressure MPa	0 (≈0 psi, 0 bar) to 1 (≈150 psi, 10 bar)	
Proof pressure (water pressure) MPa	2.0 (≈290 psi, 20 bar)	
Fluid temperature °C	-10 (14°F) to 184 (363.2°F) (no freezing)	
Ambient temperature °C	-10 (14°F) to 60 (140°F)	
Valve seat leakage cm^3/min	300 or less (at pneumatic pressure 0.02 to 1 MPa)	
Pilot fluid	Air	
Pilot pressure MPa	0.35 (≈51 psi) to 0.7 (≈100 psi)	Refer to page 568.
Mounting orientation	Unrestricted	

*1: Refer to the working fluid check list on Intro Page 39.

Electrical specifications			
Rated voltage		100 VAC (50/60 Hz) / 110 VAC (60 Hz), 200 VAC (50/60 Hz) / 220 VAC (60 Hz), 24 VDC	
Apparent power (VA)	When holding	3.6(50 Hz), 2.8(60 Hz)	
	When starting	11(50 Hz), 9(60 Hz)	
Power consumption (W)	AC	1.9(50 Hz), 1.5(60 Hz)	
	DC	2.0	
Thermal class		Class 130 (B)	
Degree of protection (IEC standards 529)		Grommet lead wire	IPX2
		With DIN terminal box (Pg9)	IPX5
		With T type terminal box (G1/2)	IPX5

*1: Use the product within ±10% of the rated voltage.

Individual specifications

Descriptions / Model No.	Port size	Orifice size (mm)	C [$dm^3/(s\cdot bar)$]	b	S (mm^2)	Cv	Pilot port size	Weight (kg)
NC: Normally closed								
SVB1S-8A	Rc1/4	10	8.3	0.4	-	2.1	Rc1/8	0.5
SVB1S-10A	Rc3/8	10	11	0.4	-	2.5		0.5
SVB1S-15A	Rc1/2	15	-	-	120	5.5		0.8
SVB1S-20A	Rc3/4	16	-	-	150	7		1
SVB1S-25A	Rc1	20	-	-	240	11		1.4
SVB1S-32A	Rc1 1/4	26	-	-	390	18.5		2.6
SVB1S-32F	32 flange	26	-	-	390	18.5		5.6
SVB1S-40A	Rc1 1/2	32	-	-	610	29		3.7
SVB1S-40F	40 flange	32	-	-	610	29		6.8
SVB1S-50A	Rc2	42	-	-	920	43		5.6
SVB1S-50F	50 flange	42	-	-	920	43		9.5
NO: Normally open type								
SVB2S-8A	Rc1/4	10	8.9	0.4	-	2.3	Rc1/8	0.5
SVB2S-10A	Rc3/8	10	12	0.3	-	2.6		0.5
SVB2S-15A	Rc1/2	15	-	-	140	5.6		0.8
SVB2S-20A	Rc3/4	16	-	-	180	8		1
SVB2S-25A	Rc1	20	-	-	280	12		1.4
SVB2S-32A	Rc1 1/4	26	-	-	450	20		2.6
SVB2S-32F	32 flange	26	-	-	450	20		5.6
SVB2S-40A	Rc1 1/2	32	-	-	680	32		3.7
SVB2S-40F	40 flange	32	-	-	680	32		6.8
SVB2S-50A	Rc2	42	-	-	1020	50		5.6
SVB2S-50F	50 flange	42	-	-	1020	50		9.5

*1 : Refer to page 568 for pilot air pressure for the NO.
*2 : Female thread is available in G thread and NPT thread.

How to order

● With solenoid valve

SVB 1 S - 15 A - E 2G L - ( ) - AC100V

- SVB: Model No.
- 1: Ⓐ Actuation
- S: Working fluid (For steam/water/air)
- 15: Ⓑ Port size
- A: Ⓒ Type of thread/flange
- E: Ⓓ Body/sealant combination *1
- 2G: Ⓔ Coil
- L: Ⓕ Other options *2 *3 *4 *5 *6
- ( ): Ⓖ Assembly direction
- AC100V: Ⓗ Voltage

Code	Content
Ⓐ Actuation	
1	NC
2	NO
Ⓑ Port size	
8	1/4
10	3/8
15	1/2
20	3/4
25	1
32	1 1/4, 32 (Flange)
40	1 1/2, 40 (Flange)
50	2, 50 (Flange)
Ⓒ Type of thread/flange	
A	Rc(8A to 50A)
F	Flange (32F to 50F)
G	G(8G to 50G)
N	NPT(8N to 50N)

Ⓓ Body/sealant combination

	Body	Seal	O-ring	Remarks
C	Bronze	TFE resin	Fluoro rubber	Steam/ air/water
E	Stainless steel	TFE resin	Fluoro rubber	
F	Stainless steel	TFE resin	TFE resin	Solvent-based

Ⓔ Coil		
2C	Standard	Grommet lead wire
2G	Option	With DIN terminal box (Pg9)
2H		DIN terminal box with lamp (Pg9)
3T		With T type terminal box (G1/2)
3R		T type terminal box with lamp (G1/2)

Ⓕ Other options	
Blank	No option
S	With surge suppressor
B	Mounting plate *2
L	With indicator
Ⓖ Assembly direction	
Blank	No option
X	Cylinder cover rotated 90°
Y	Cylinder cover rotated 180°
Z	Cylinder cover rotated 270°
R	Coil reversed 180° (with solenoid valve) Mounting plate/coil reversed 180° (with solenoid valve)

Refer to page 525 for the layout drawing.

Ⓗ Voltage	
AC100V	100 VAC 50/60 Hz 110 VAC 60 Hz
AC200V	200 VAC 50/60 Hz 220 VAC 60 Hz
DC24V	24 VDC

⚠ Precautions for model No. selection

*1 : When the working fluid is steam, select C or E.
*2 : The mounting plate (Item Ⓕ B) can be attached to only the female thread of port size 8 to 32.
*3 : Indicator (Item Ⓕ L) can be attached to only the NC (actuation 1).
*4 : To add multiple options for Item Ⓕ, specify as below.
Surge suppressor + mounting plate → SB
Surge suppressor + indicator → SL
Mounting plate + indicator → BL
Surge suppressor + mounting plate + indicator → SBL
*5 : The surge suppressor is attached with the lead wire coil. When selecting a coil with a terminal box, the surge suppressor is mounted in the terminal box.
*6 : Manual override (non-locking) is provided as standard.

[Example of model No.]

SVB1S-15A-E2GL-AC100V

Model: SVB

Ⓐ Actuation	: NC
Ⓑ Port size	: 1/2
Ⓒ Type of thread/flange	: Rc
Ⓓ Body/sealant combination	: Body - stainless steel, sealant - tetrafluoroethylene resin
Ⓔ Coil	: With DIN terminal box (Pg9)
Ⓕ Other options	: Indicator
Ⓖ Assembly direction	: No option
Ⓗ Voltage	: 100 VAC 50/60 Hz, 110 VAC 60 Hz

EXA
FWD
HNB/G
USB/G
FAB/G
FGB/G
FVB
FWB/G
FHB
FLB
AB
AG
AP/AD
APK/ADK
DryAir
EX-XPLNprf
XPLNprf
HVB/HVL
S⇕B/NAB
LAD/NAD
Water-Rela
NP/NAP/NVP
SNP
CHB/G
MXB/G
Other valves
SWD/MWD
DustColl
CVE/CVSE
CCH/CPE/D
LifeSci
Gas-Combus
Auto-Water
SpecFld
Custom
Ending

Internal structure and parts list

● SVB1S

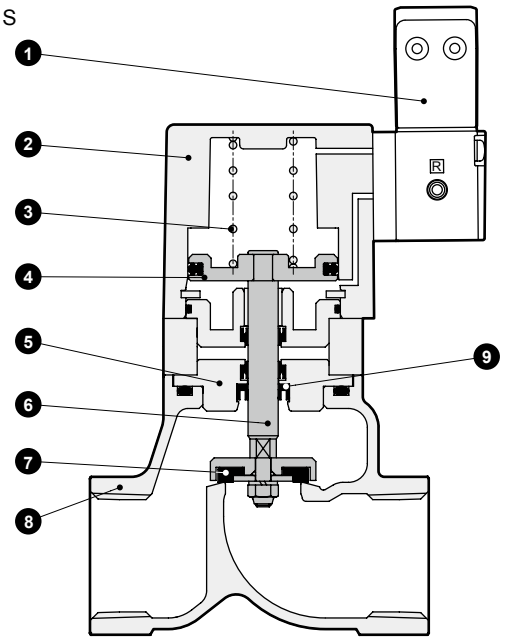

No.	Part name	Material	
1	Pilot solenoid valve	-	-
2	Cylinder guard	ADC12	Aluminum die-casting
3	Spring	SWP	Piano wire
4	Piston	A2017	Aluminum
5	Adaptor	C3604(SUS304)	Copper alloy (stainless steel)
6	Piston rod	SUS304	Stainless steel
7	Main valving element	PTFE	Tetrafluoroethylene resin
8	Body	CAC408(SUS13)	Bronze casting (stainless steel casting)
9	Rod packing	PTFE	Tetrafluoroethylene resin

( ) shows options.

Dimensions

● SVB*S-8* to 50*-*2C (female thread)
Grommet lead wire

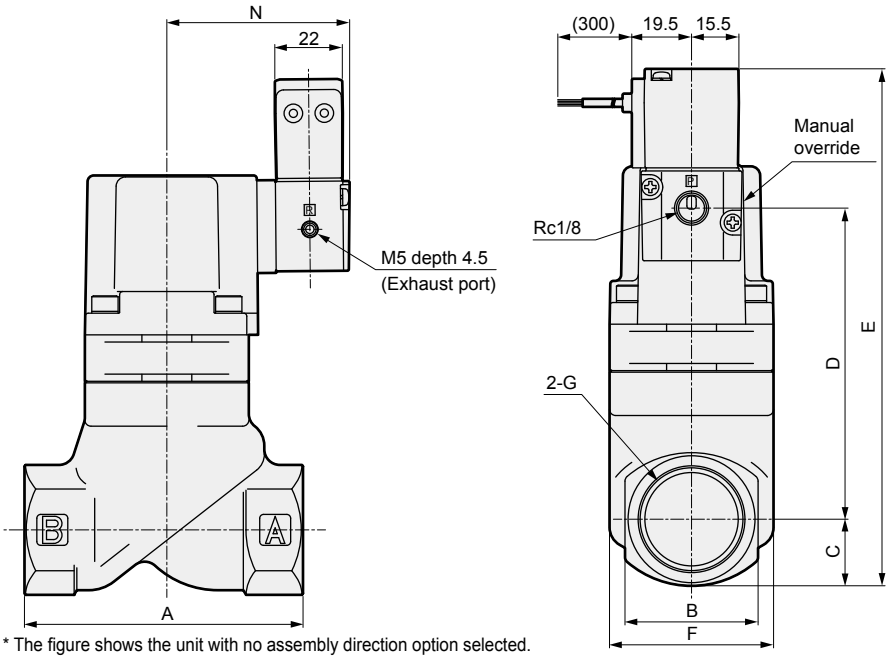

● G thread conversion connector

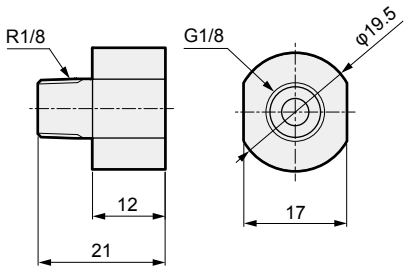

* The figure shows the unit with no assembly direction option selected.

Model No.	A	B	C	D	E	F	G	N
SVB*S-8A/G/N	50	24	12	56.5	113.5	32	Rc1/4 / G1/4 / 1/4-18NPT	54.5
SVB*S-10A/G/N							Rc3/8 / G3/8 / 3/8-18NPT	
SVB*S-15A/G/N	71	28	14.5	81.5	141	43	Rc1/2 / G1/2 / 1/2-14NPT	55.5
SVB*S-20A/G/N	80	35	17.5	91	153.5	43	Rc3/4 / G3/4 / 3/4-14NPT	55.5
SVB*S-25A/G/N	90	43	21	102	168	53	Rc1/G1/1-11.5NPT	59
SVB*S-32A/G/N	125	55	27.5	128.5	201	63	Rc1 1/4 / G1 1/4 / 1 1/4-11.5 NPT	63.5
SVB*S-40A/G/N	140	61	30.5	154.5	230	77	Rc1 1/2 / G1 1/2 / 1 1/2-11.5 NPT	70.5
SVB*S-50A/G/N	160	76	38	188	271	95	Rc2/G2/2-11.5NPT	78.5

*1: For G thread, a G thread conversion connector is inserted to port P.

● SVB*S-32F to 50F-*2C (flange)
Grommet lead wire

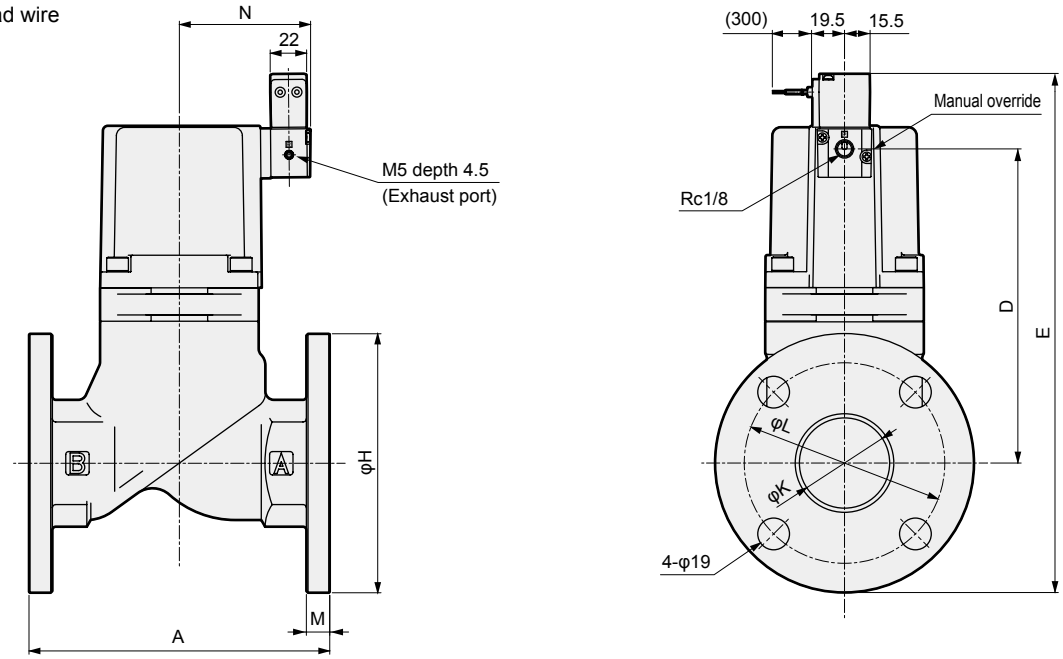

* The figure shows the unit with no assembly direction option selected.

Model No.	A	D	E	H	K	L	M	N
SVB*S-32F	170	128.5	241	135	36	100	12	63.5
SVB*S-40F	180	154.5	269.5	140	42	105	12	70.5
SVB*S-50F	180	188	311	155	54	120	14	78.5

EXA
FWD
HNB/G
USB/G
FAB/G
FGB/G
FVB
FWB/G
FHB
FLB
AB
AG
AP/AD
APK/ADK
DryAir
EX-XPLNprf
XPLNprf
HVB/HVL
S⇕B/NAB
LAD/NAD
Water-Rela
NP/NAP/NVP
SNP
CHB/G
MXB/G
Other valves
SWD/MWD
DustColl
CVE/CVSE
CCH/CPE/D
LifeSci
Gas-Combus
Auto-Water
SpecFld
Custom
Ending

Optional dimensions

CAD

● DIN terminal box (Pg9) DIN terminal box with lamp (Pg9)
SVB*S-*-* 2G 2H

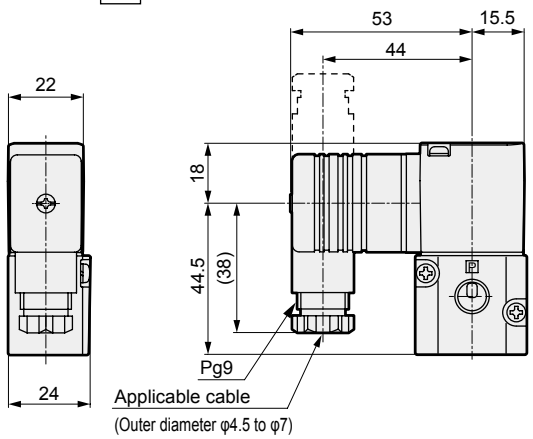

● T type terminal box (G1/2) T type terminal box with lamp (G1/2)
SVB*S-*-* 3T 3R

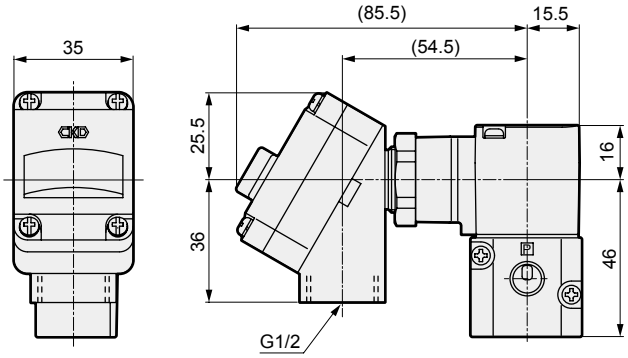

● Indicator
SVB1S-8* to 50*-** L

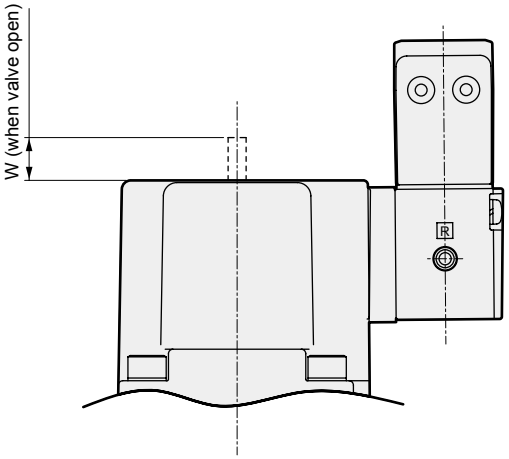

Model No.	W
SVB1S-8A/G/N	4
SVB1S-10A/G/N	4
SVB1S-15A/G/N	6.5
SVB1S-20A/G/N	6.5
SVB1S-25A/G/N	7
SVB1S-32A/G/N/F	8
SVB1S-40A/G/N/F	10.5
SVB1S-50A/G/N/F	13

● Mounting plate
SVB*S-8*/10*-** B

Material: Steel
Zinc plated

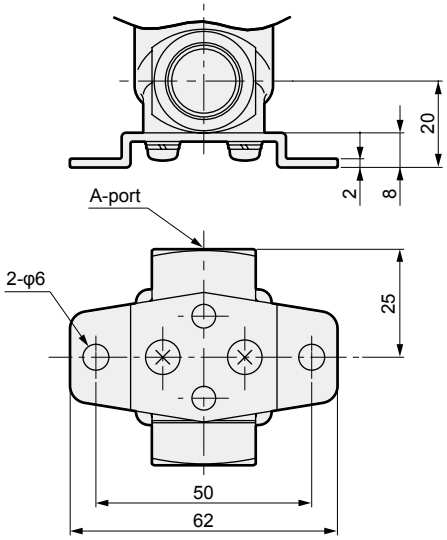

Optional dimensions

● Mounting plate
SVB*S-15* to 32*-** B / B-R / B-Y

Material: Steel
Zinc plated

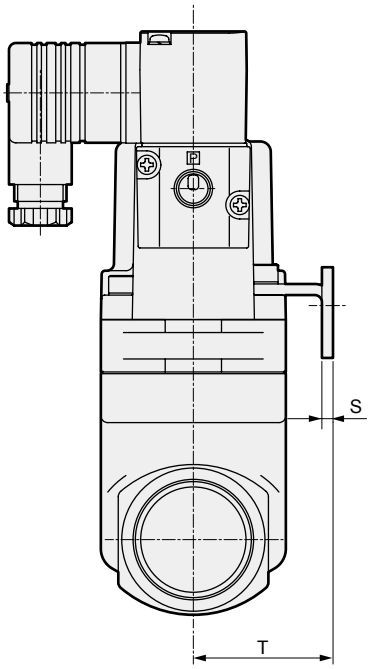

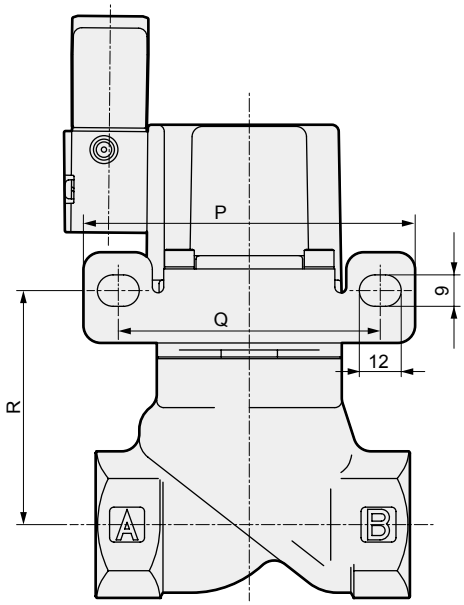

* The figure shows B .

● Mounting plate
SVB*S-15* to 32*-** B-X / B-Z

Material: Steel
Zinc plated

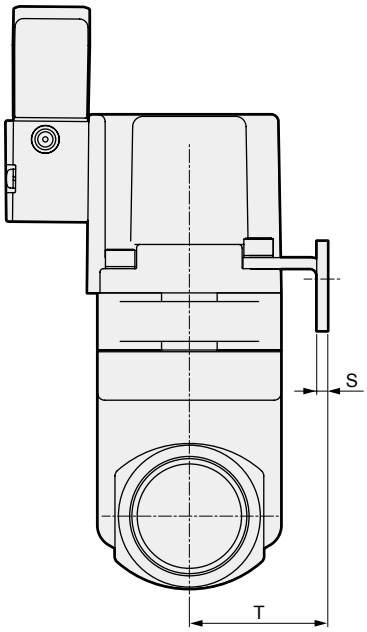

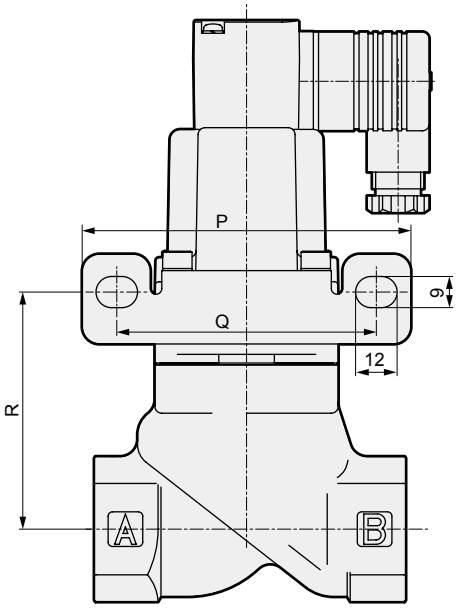

* The figure shows B-X.

Model No.	P	Q	R	S	T
SVB*S-15A/G/N	90	70	55	2.3	30
SVB*S-20A/G/N	90	70	64.5	2.3	30
SVB*S-25A/G/N	95	75	68.5	3.2	40
SVB*S-32A/G/N	105	85	81.5	3.2	45