Clean regulator

RC2000 Series

● Port size: Rc1/4, Rc3/8, Rc1/2

JIS symbol

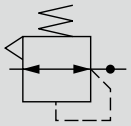

RoHS CAD

Overview

With its oil-prohibited specifications and stainless steel body, the RC2000 is ideal for clean air and N_2 pressure control in semiconductor manufacturing equipment and liquid crystal device manufacturing equipment. The compact body and large flow rate capacity are suitable for air (N_2) blowing.

Features

● Oil-prohibited specifications
Precision cleaning is performed on the gas contact parts, and the manufacturing processes from assembling to packaging are completed in clean rooms. No grease is used in gas-contacting parts.

● Compact/large flow rate
A large flow rate of 0.8 m^3/min. is realized even with just 50 mm face to face. (Flow rate at 0.7 MPa primary pressure, 0.5 MPa set pressure, 0.1 MPa pressure drop)

● Reverse function (when back pressure is not applied)
This function reverses secondary pressure to the primary side when primary pressure is exhausted. This safety-oriented product has no residual pressure on the secondary side.

Specifications

Model No.		RC2000-8-P90	RC2000-10-P90	RC2000-15-P90
Working fluid		Compressed air, N_2		
Max. working pressure MPa		1.0 (≈150 psi, 10 bar) (0.5 (≈73 psi, 5 bar) for low pressure)		
Proof pressure MPa		1.5 (≈220 psi, 15 bar)		
Ambient / fluid temperatures °C		5 (41°F) to 60 (140°F)		
Set pressure range MPa		Standard: 0.05 (≈7.3 psi, 0.5 bar) to 0.7 (≈100 psi, 7 bar) Low pressure: 0.02 (≈2.9 psi, 0.2 bar) to 0.2 (≈29 psi, 2 bar) *1		
Port size (IN/OUT)		Rc1/4	Rc3/8	Rc1/2
Pressure gauge port size		Rc1/8		
Gas contact part materials	Metal	SUS316		
	Resin	PTFE		
	Rubber	FKM		
Assembling/inspection/packaging		Integrated production in cleanroom		
Cleaning (gas contact part)		Precision cleaning		
Weight kg		0.47	0.45	0.59
Attachment weight g		G½49:90,B3:40,E1:5		

*1: When using the standard with a set pressure of 0.4 MPa or less, confirm that the primary pressure difference for the set pressure is within 0.5 MPa. When using the low pressure type, confirm that the primary pressure difference for set pressure is within 0.3 MPa.

How to order

RC2000 - 8 - LN - GY49B3E1 - P90

(A) (B) (C) (D)

Model No. (clean-room specifications) (oil-prohibited specifications)

(A) Port size	
8	Rc1/4
10	Rc3/8
15	Rc1/2 (Custom order)

(B) Option *1		
Pressure range *2	Blank	0.05 to 0.7 MPa
	L	0.02 to 0.2 MPa
Relief mechanism	Blank	Relief
	N	Non-relief

(C) Other attachments *1, *3	
Blank	Without attachment
GY49	Pressure gauge (G49D-6-□-P94)
GZ49	Pressure gauge (G49D-6-□-P90)
B3	L type bracket
E1	Fitting (for exhaust port)

(D) Clean-room specifications	
	Treatment
P90	SS used Oil free

*1: When selecting multiple options or attachments, indicate the model No. code in order starting from the top. If option or attachment is left blank, delete the hyphen "-". (Example: RC2000-8-P90)
2: If "Blank" is selected for the pressure range, the 1.0 MPa pressure gauge (pressure gauge model: G49D-6-P10-P9) is used. If "L" is selected for the pressure range, the 0.2 MPa pressure gauge (pressure gauge model: G49D-6-P02-P9*) is used.
*3: Two pipe plugs (R1/8) are included with the product. If a pressure gauge is selected as an attachment, one plug is included.

Flow characteristics

● RC2000-8-P90

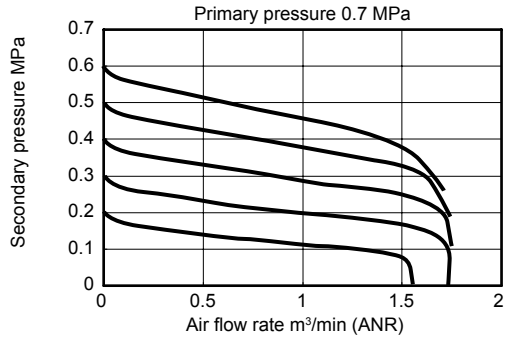

● RC2000-10-P90

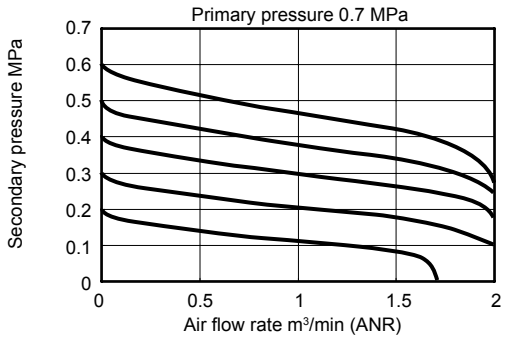

● RC2000-15-P90

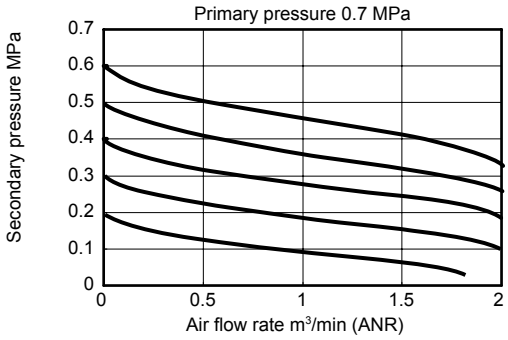

Flow characteristics (low pressure)

● RC2000-*-L-P90

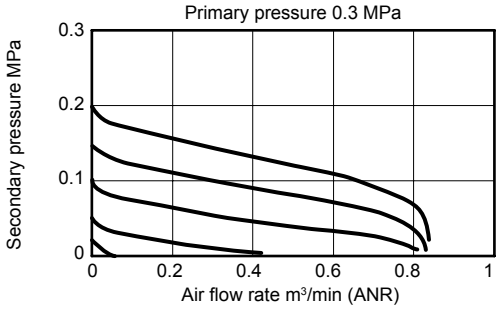

Pressure characteristics

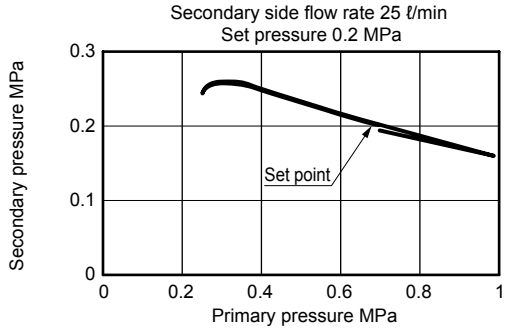

Internal structure and parts list

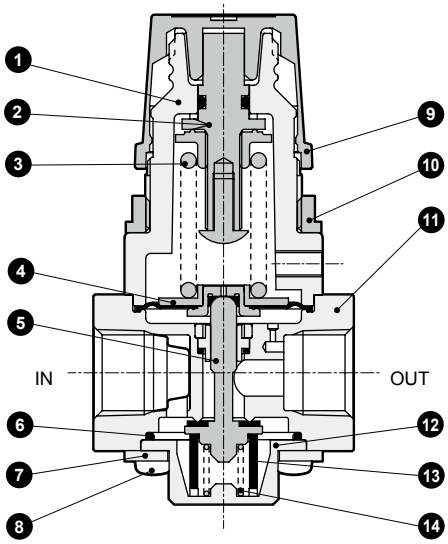

No.	Part name	Material (treatment)
1	Cover	PA66
2	Pressure adjusting screw assembly	Steel, SUS, FKM, POM
3	Spring	Steel
4	Diaphragm	SUS316, FKM, SUS303
5	Valve	SUS316, FKM
6	O-ring	FKM
7	Plate	SUS304
8	Thread	Steel (nickel plating)
9	Knob	POM
10	Mounting nut	Zinc die-casting (nickel plating)
11	Body	SUS316, FKM, PTFE
12	Bottom cap	SUS316
13	Bottom rubber	FKM
14	Spring	SUS316

* A mesh filter is installed on IN sides of RC2000-8-P90 and RC2000-10-P90.

Cannot be disassembled

Dimensions

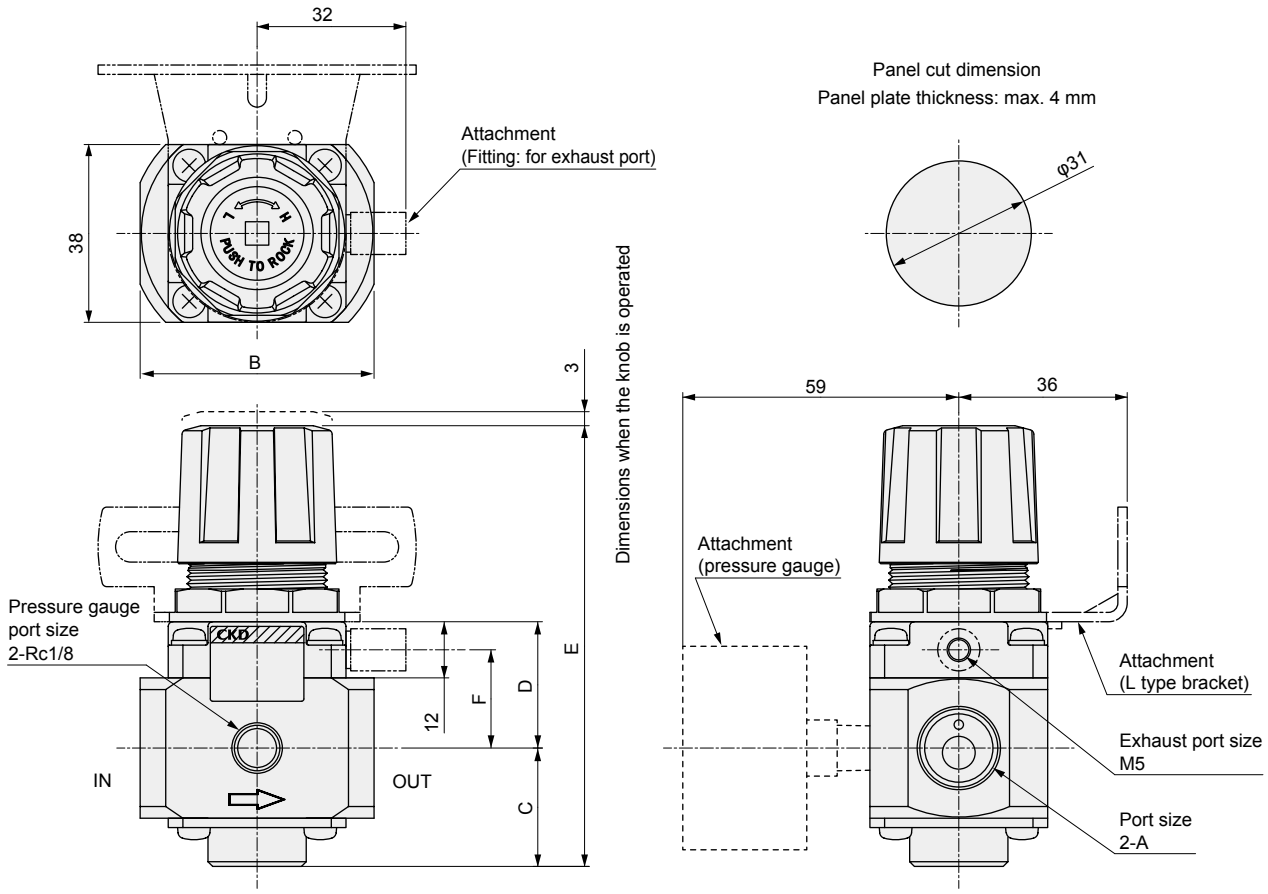

Model No.	A	B	C	D	E	F
RC2000-8	Rc1/4	50	25.5	27	95	21
RC2000-10	Rc3/8					
RC2000-15	Rc1/2	58	27.5	29	99	23

Attachment

● L type bracket (-B3)
Part model No.: RC2000-B3
· Material: Steel
Nickel plating treatment

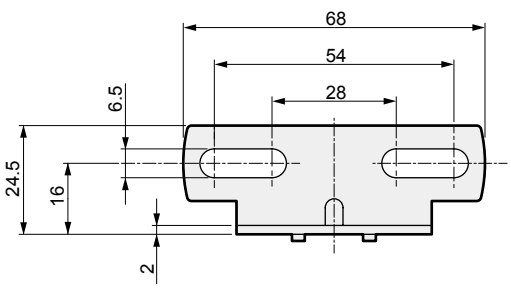

Fitting (-E1)
Part model No.: RC2000-E1

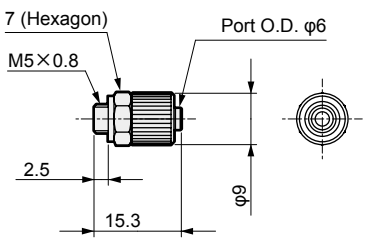

Model No.	RC2000-E1
Working fluid	Compressed air, N_2
Fluid temperature °C	5 to 60
Ambient temperature °C	5 to 60
Tube used	Urethane tube

Part material	Material (treatment)
Metal parts	Copper alloy (nickel plating)
Rubber parts	NBR

Custom product

Available as a custom product. Contact CKD for details.

RC Large flow rate and large bore size

■ Flow rate: 3000 ℓ/min(ANR) *1
■ Port size : Rc3/4, Rc1

*1 Flow rate at 0.7 MPa primary pressure, 0.5 MPa set pressure and 0.1 MPa pressure drop.