1. Rotational direction of input/output shaft

The parallel cam index drive's output shaft rotates in the direction opposite the input shaft (cam shaft) viewed from the input shaft side. The input shaft allows either clockwise or counterclockwise rotation.

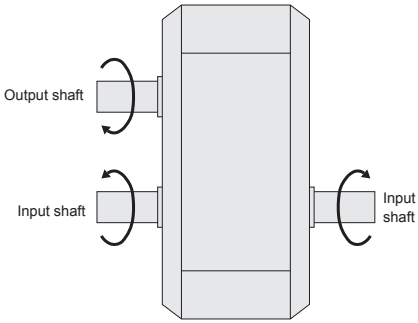

Reference: HO reducer installation and shaft rotation direction

Left shaft installation (on housing side)		Right shaft installation (on housing plate side)	
A 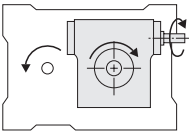	J 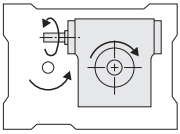	E 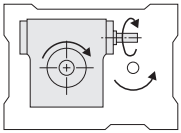	N 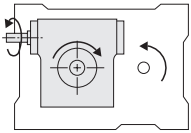
B 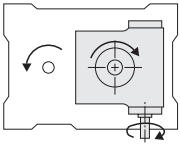	K 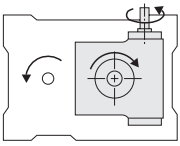	F 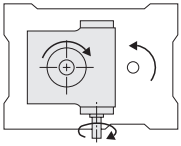	P 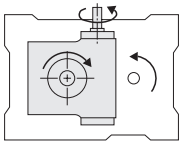
C 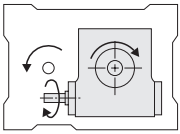	L 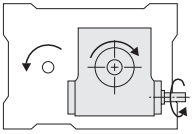	G 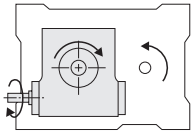	Q 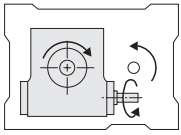
D 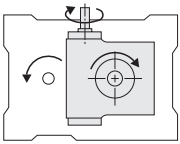	M 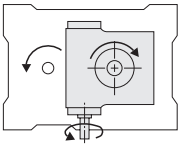	H 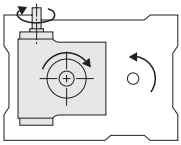	R 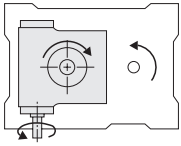

* Combinations where the rotation is opposite the direction of the arrows are also possible.

2. Installation position and input/output shaft layout

Shaft layout code	Meaning
S	Standard layout
R	Reverse layout Note: Output shaft comes out on housing plate side.
1	Output shaft comes out opposite to the input shaft.
2	Output shaft comes out on the same side as the input shaft.
3	Input shaft comes out on both sides.

Common specifications

PCIS shaft layout and installation position

PCIS ***-*** *** ** **GH

Shaft layout G / Position H	S1 (Model No. display: 1)	S2 (Model No. display: 2)	S3 (Model No. display: 3)
1	1 1	2 1	3 1
2	1 2 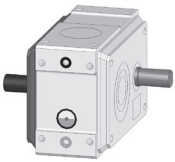	2 2	3 2 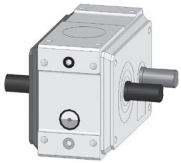
3	1 3	2 3	3 3
4	1 4	2 4 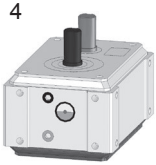	3 4 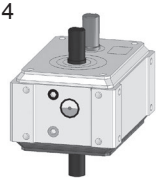
5	1 5	2 5	3 5
6	1 6	2 6	3 6

Input shaft

Output shaft

Oil filler

Oil level gauge

Drain port

Housing plate

PCIS shaft layout and installation position

PCIS ***-*** *** ** **
GH

Shaft layout G / Position H	R1 (Model No. display: 4)	R1 (Model No. display: 5)	R3 (Model No. display: 6)
1	4 1	5 1	6 1
2	4 2 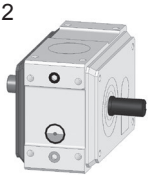	5 2	6 2 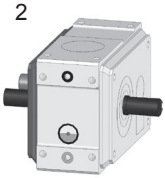
3	4 3	5 3	6 3
4	4 4	5 4	6 4
5	4 5	5 5	6 5
6	4 6	5 6	6 6

Input shaft

Output shaft

Oil filler

Oil level gauge

Drain port

Housing plate

Common specifications

3. Diameter of the stepped section of the input/output shaft

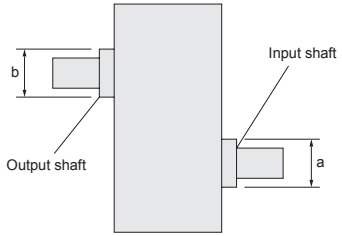

Dimensions / Size	a	b
040	ø 15	ø 15
050	ø 17	ø 17
063	ø 22	ø 22
080	ø 28	ø 28
100	ø 35	ø 35
125	ø 40	ø 40
160	ø 48	ø 48
200	ø 65	ø 65
250	ø 75	ø 75

4. Optional worm reducer

List of standard mounting worm reducers

Main model No.		HO reducer Size	Reduction ratio Value in ( ) represents the special reduction ratio	TE reducer Size	Reduction ratio
PCIS PCOS	040	-	-	-	-
	050	HO 32	1/20, 1/40, 1/60 (1/30, 1/50)	TE 35	1/10, 1/20, 1/30 1/40, 1/50, 1/60
	063	HO 40	1/20, 1/40, 1/60 (1/30, 1/50)	TE 42	1/10, 1/20, 1/30 1/40, 1/50, 1/60
	080	HO 50	1/20, 1/30, 1/40 1/50, 1/60	TE 51	1/10, 1/20, 1/30 1/40, 1/50, 1/60
	100	HO 60	1/20, 1/30, 1/40 1/50, 1/60	TE 63	1/10, 1/20, 1/30 1/40, 1/50, 1/60
	125	HO 80	1/20, 1/30, 1/40 1/50, 1/60	TE 80	1/10, 1/20, 1/30 1/40, 1/50, 1/60
	160	HO100	1/20, 1/30, 1/40 1/50, 1/60	TE100	1/10, 1/20, 1/30 1/40, 1/50, 1/60
	200	HO100	1/20, 1/30, 1/40 1/50, 1/60	TE100	1/10, 1/20, 1/30 1/40, 1/50, 1/60
		HO135	1/20, 1/40, 1/60 (1/30, 1/50)	TE150	1/10, 1/20, 1/30 1/40, 1/50, 1/60
	250	HO135	1/20, 1/40, 1/60 (1/30, 1/50)	TE150	1/10, 1/20, 1/30 1/40, 1/50, 1/60

* The above indicates the combinations of standard installations. Check the reducer load torque (Ter) and the reducer rated output torque before use.

5. Optional/Torque saver (TSF4 to TSF18)
Torque guard (TGX20 to TGX70)
+ release detection proximity switch

Proximity switch model No.

Torque saver Torque guard	SW model No.	Manufacturer
TSF4	TL-W3MC1	OMRON
TSF5 to TSF18	TL-W5MC1	
TGX20 to TGX70		

Parallel cam drive

1. Standard model No. Index series

PCIS	050	–	002	120	C	1	3	4
A	B		C	D	E	F	G	H

A Model	B Distance between shafts		C Indexing number (n)		D Total index angle (θt)		E Cam curve		F Number of dwell intervals of the cam		G Input/Output layout	
PCIS	040	40 mm	001	1	090	90°	S	MS curve (Standard)	1	1 dwell Index number: 1.2.3.4	1	S1
	050	50 mm	002	2	120	120°	C	MC curve (MCV50)	2	2 dwell Index number: 6.8	2	S2
	063	63 mm	003	3	150	150°					3	S3
	080	80 mm	004	4	180	180°					4	R1
	100	100 mm	006	6	210	210°					5	R2
	125	125 mm	008	8	240	240°					6	R3
	160	160 mm			270	270°						
	200	200 mm			300	300°						
	250	250 mm			330	330°						

For details of the timing chart, refer to B-7.

When a torque saver (optional) and a torque guard (optional) are added, the code will be either 1 (S1) or 4 (R1).

Example of model No. (1)

PCIS063-008270S216

Shaft interval ..... 63 mm
Index number 8
Total index angle ..... 270° (135° × 2)
Cam curve ..... MS curve
Dwell No. of the cam ..... 2 dwell
Input/Output layout S1
Installation position ..... Position #6

Ⓗ Installation position

■S1 (standard)

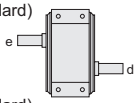

■S2 (standard)

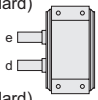

■S3 (standard)

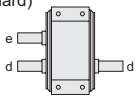

■R1

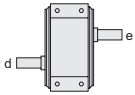

■R2

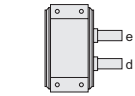

■R3

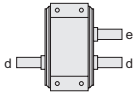

1	Position #1
2	Position #2
3	Position #3
4	Position #4
5	Position #5
6	Position #6

Depending on the orientation of the index drive, the oil supply port, the drain port and the oil level gauge will be located at different positions and so it is necessary to choose one of the orientations from (1) to (6).

■Position #1

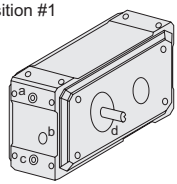

■Position #2

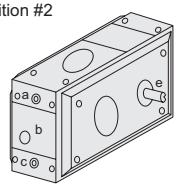

■Position #3

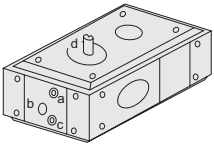

■Position #4

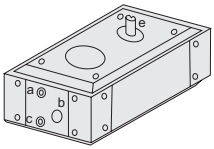

■Position #5

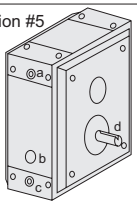

■Position #6

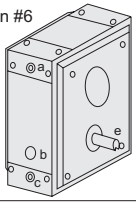

a: Oil supply port b: Oil level gauge c: Drain port d: Input shaft e: Output shaft

Parallel cam drive

2-1. Model No. with options

Common for index and oscillating series

PCIS 100 – 001 300 S 1 1 1 – N W F 0 6 6 N G 08 A

Main model No.

I J K

L M N O P

Q R

Input/Output shaft specification code

Ⓘ Input shaft specification code (left shaft)		Ⓙ Input shaft specification code (right shaft)		Ⓚ Output shaft specification code	
N	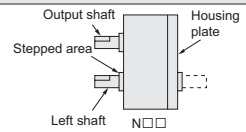	N	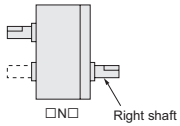	N	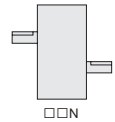
K	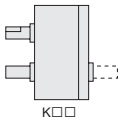	K	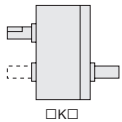	K	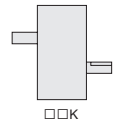
W / E	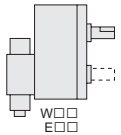	W / E	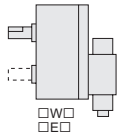	F / X	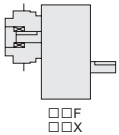
V / L	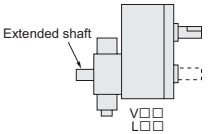	V / L	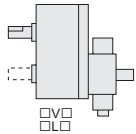	S / Y	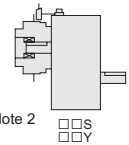

N	Standard (with keyway)
K	No keyway
W	With the worm reducer (W: HO reducer, E: TE reducer)
E	* Since the specification for the worm reducer is required, determine "Worm reducer installation specification code."
V	With the worm reducer (Extended shaft: HO reducer, L: TE reducer)
L	* Since the specification for the worm reducer is required, determine "Worm reducer installation specification code."

N	Standard (with keyway)
K	No keyway (straight shaft)
F	With Torque saver (TSF)
X	With Torque guard (TGX)
S	With Torque saver (TSF) + proximity switch for release detection
Y	With Torque guard (TGX) + proximity switch for release detection

Since the specifications for a torque saver and a torque guard are required when F, X, S, or Y is selected, determine "Torque saver/guard installation specification code."

■ Relationship between the input/output shaft layout and the input/output shaft specification code

Input/Output shaft Layout	S1			S2			S3			R1			R2			R3		
	Ⓘ	Ⓙ	Ⓚ	Ⓘ	Ⓙ	Ⓚ	Ⓘ	Ⓙ	Ⓚ	Ⓘ	Ⓙ	Ⓚ	Ⓘ	Ⓙ	Ⓚ	Ⓘ	Ⓙ	Ⓚ
Available code	N	N K W V E L	N K F X S Y	N K	N	N K	N K	N K W V E L	N K	N K W V E L	N	N K F X S Y	N	N K	N K	N K W V E L	N K	N K

▼ When a worm reducer is installed

Ⓛ Ⓜ Ⓝ Ⓞ Ⓟ Worm reducer installation specification code							
Ⓛ Ⓜ Reducer size		Ⓝ Reduction ratio		Ⓞ Clutch/Brake:		Ⓟ Mounting direction	
03	HO32, TE35	1	1/10 (TE reducer only)	Y	Clutch/Brake: Yes	Left shaft installation	A, B, C, D, J (AR), K (BR), L (CR), M (DR)
04	HO40, TE42	2	1/20				
05	HO50, TE51	3	1/30				
06	HO60, TE63	4	1/40	N	Clutch/Brake: No		
08	HO80, TE80	5	1/50				
10	HO100, TE100	6	1/60				
13	HO135, ——						
15	——, TE150		* Those of 1/30 and 1/50 for HO32, HO40 and HO135 have special ratio. Verify the delivery schedule.			Right shaft installation	E, F, G, H, N (ER), P (FR), Q (GR), R (HR)
	* Refer to D-595 to 632.						

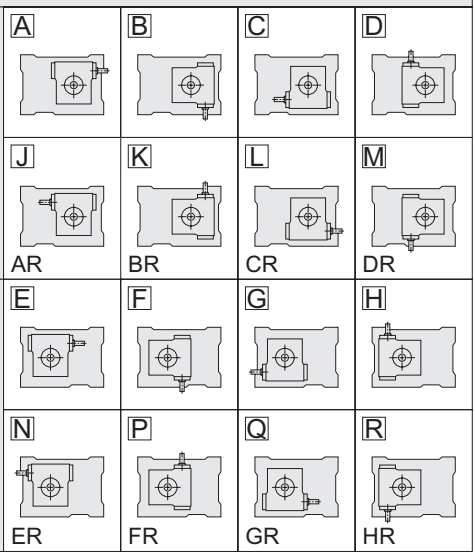

* While a torque saver/guard is installed onto the output shaft and when none of the worm reducer can be installed onto the input shaft, insert a hyphen "-" at Ⓛ and continue with the torque saver/guard installation specification code.
Example: PCIS063-003270S111-NNF-06D

PCIS100-001300S111-NW F066NG **08** **A**

Q R

▼ When a torque saver is installed

Ⓠ Ⓡ Torque saver mounting specification code				Application index size
Ⓠ TSF size		Ⓡ Release torque range		
04	TSF4	A B C D	A B C D	040
05	TSF5			050/063
06	TSF6			063/080
08	TSF8			100
11	TSF11			125
14	TSF14			160
18	TSF18			200/250

▼ When a torque guard is installed

Ⓠ Ⓡ Torque guard mounting specification code				Application index size
Ⓠ TGX size		Ⓡ Trip torque range		
20	TGX20	L M H	LC MC HC	050/063
35	TGX35			080
50	TGX50			100
70	TGX70			125

Note 1: When you specify the release (trip) torque of a torque saver/guard, notify CKD of the value. Otherwise, the product will be shipped adjusted at the min. value within the adjusting range.
* Refer to D-633 to 663.
Note 2: The proximity switch for release detection of a torque saver/guard is the NO type. NC type is also available.

Parallel cam drive

2-2. Examples of model numbers with options / 3. Custom specification model No.

When you place an order with a model number, ensure that it exactly matches what you order.
Even if 1 letter is incorrectly written, the product will be different with different specifications.
In order for us to deliver what you really want, carefully determine the model number referring to the following examples.

Example of model No. (2)

PCIS250-004090S135-KKK
Input shaft specification
Left shaft: No keyway
Right shaft: No keyway
Output shaft specification
No keyway

Example of model No. (3)

PCIS160-003180S111-NWN104YQ
Input shaft specification
Left shaft: Standard
Right shaft: Worm reducer installed
Output shaft specification: Standard

Worm reducer installation specification
Reducer size: HO100
Reduction ratio: 1/40
Clutch/Brake: Yes
Mounting direction: Q

Example of model No. (4)

PCIS040-004090S115-NNS-04A
Input shaft specification
Left shaft: Standard
Right shaft: Standard
Output shaft specification: Torque saver + proximity switch for release detection installed

Torque saver mounting specification
TSF size: TSF4
Release torque range: A

Example of model No. (5)

PCIS160-001300S141-WNF102YL14C
Input shaft specification
Left shaft: Worm reducer installed
Right shaft: Standard
Output shaft specification: Torque saver installed

Worm reducer installation specification
Reducer size: HO100
Reduction ratio: 1/20
Clutch/Brake: Yes
Mounting direction: L

Torque saver mounting specification
TSF size: TSF14
Release torque range: C

● Special specification model number Common for index and oscillating series

PCIS 063 – 004 090 S 1 3 1 – X012345

Main model No.

Special specification No.

* Add "-X (6 digit number)" after the main model No. as the special specification number.
The special specification model number shall be determined after a consultation with the customer.
Options other than the standard are available upon request. Please provide us with the specifications.
* High speed specifications (input shaft rotational speed of 200 rpm or higher) are deemed to be special specifications.

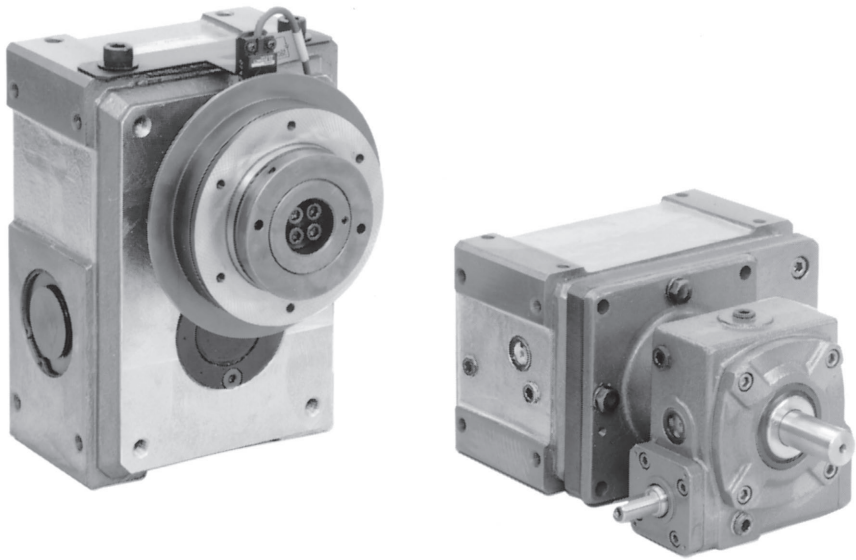

Parallel cam drive

1. Standard model No. Oscillating series

PCOS	125	–	030	120	S	T	3	4
A	B		C	D	E	F	G	H

A Model	B Distance between shafts		C Oscillating angle (ψ)		D Total index angle (θt)		E Cam curve		F Orbit pattern
PCOS	040	40 mm	015	15°	060	60° (30°×2)	S	MS curve (Standard)	
	050	50 mm	030	30°	090	90° (45°×2)	C	MC curve (MCV50)	
	063	63 mm	045	45°	120	120° (60°×2)			
	080	80 mm			180	180° (90°×2)			
	100	100 mm			240	240° (120°×2)			
	125	125 mm			300	300° (150°×2)			
	160	160 mm			360	360° (180°×2)			
	200	200 mm							
	250	250 mm							

T (Standard)

When the input shaft starts to rotate from the rotation reference point, the output shaft rotates in sequence from 1 and 2 as in the figure.

Input/Output layout [S1] | [R1]

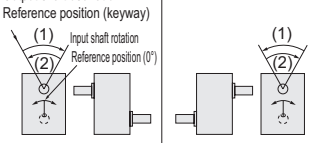

S

[S1] | [R1]

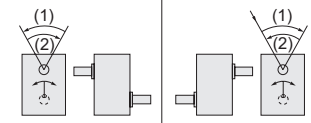

For details of the timing chart, refer to B-7.

Example of model No. (1)

PCOS080-030240ST15

Shaft interval .....80 mm
Oscillating angle .....30°
Total index angle .....240° (120° × 2)
Cam curve .....MS curve
Orbit pattern .....T
Input/Output layout S1
Installation position .....Position #5

Ⓖ Input/Output layout

1	S1
2	S2
3	S3
4	R1
5	R2
6	R3

■S1 (standard)

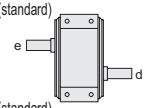

■S2 (standard)

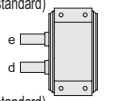

■S3 (standard)

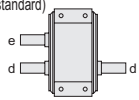

■R1

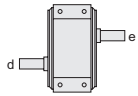

■R2

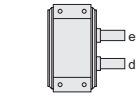

■R3

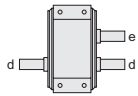

* When a torque saver (optional) and a torque guard (optional) are added, the code will be either 1 (S1) or 4 (R1).

Ⓗ Installation position

1	Position #1
2	Position #2
3	Position #3
4	Position #4
5	Position #5
6	Position #6

Depending on the orientation of the index drive, the oil supply port, the drain port and the oil level gauge will be located at different positions and so it is necessary to choose one of the orientations from (1) to (6).

■Position #1

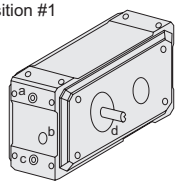

■Position #2

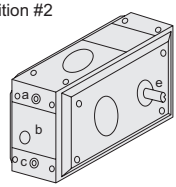

■Position #3

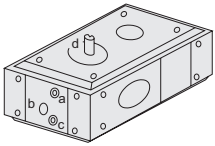

■Position #4

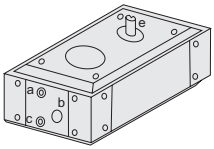

■Position #5

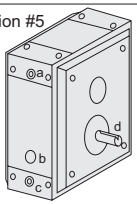

■Position #6

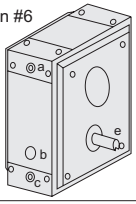

a: Oil supply port b: Oil level gauge c: Drain port d: Input shaft e: Output shaft

● Standard specifications

Dimensions

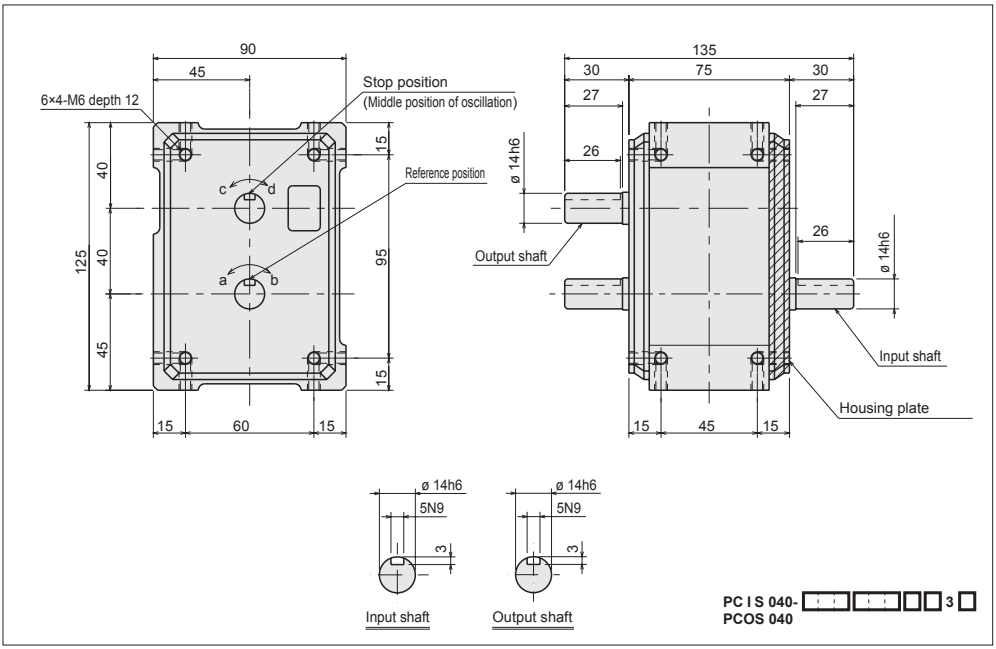

Installation position and oil supply/drain port and oil level gauge positions

● Oil fill/drain port (Rc1/4)
○ Oil level gauge (ø 20)

Installation position	1	2	3
Series	PCIS/PCOS	PCIS/PCOS	PCIS/PCOS
Dimensions	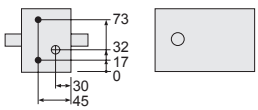	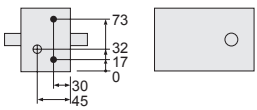	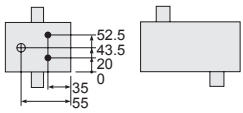

Installation position	4	5	6
Series	PCIS/PCOS	PCIS/PCOS	PCIS/PCOS
Dimensions	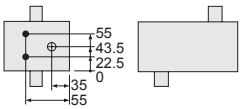	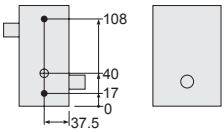	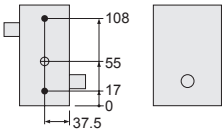

Characteristics

Descriptions	Unit	Characteristics	
		Output shaft	Input shaft
Allowable thrust force	N	480	280
Allowable radial force	N	350	200
Allowable bending moment	N·m	18	-
Moment of inertia	$kg \cdot m^2$	1.09×10^{-4}	1.29×10^{-4}

Descriptions	Unit	Characteristics
Internal frictional torque (Tin)	N·m	1.1
Product weight	kg	3
Oil level	ℓ	0.12
Paint color		Silver

Accuracy

Index accuracy (sec.)		
Indexing accuracy	1 dwell	± 90
	2 dwell	± 180
	3 dwell	-
	4 dwell	-
Repeatability		90

Oscillating accuracy (sec.)	
Indexing accuracy	± 180
Repeatability	90

* For the dwell accuracy, please contact CKD.

List of index angles

Index series **PCIS 040** Cam curve/MS

Total index angle (θt) / Index number (n)		90	120	150	180	210	240	270	300	330
1 dwell	1								○	○
	2			○	○	○	○	○	○	○
	3	○	○	○	○	○	○	○	○	○
	4	○	○	○	○	○	○	○	○	○
2 dwell	6		○	○	○	○	○	○	○	○
	8	○	○	○	○	○	○	○	○	○

Cam curve/MC

Total index angle (θt) / Index number (n)		90	120	150	180	210	240	270	300	330
1 dwell	1					○	○	○	○	○
	2		○	○	○	○	○	○	○	○

Oscillating series **RCOS 040** Cam curve/MS

Total index angle (θt) / Oscillating angle (ψ)	60	90	120	180	240	300	360
45			○	○	○	○	○
30		○	○	○	○	○	○
15	○	○	○	○	○	○	○

Dimensions with options

With Torque saver (TSF4)

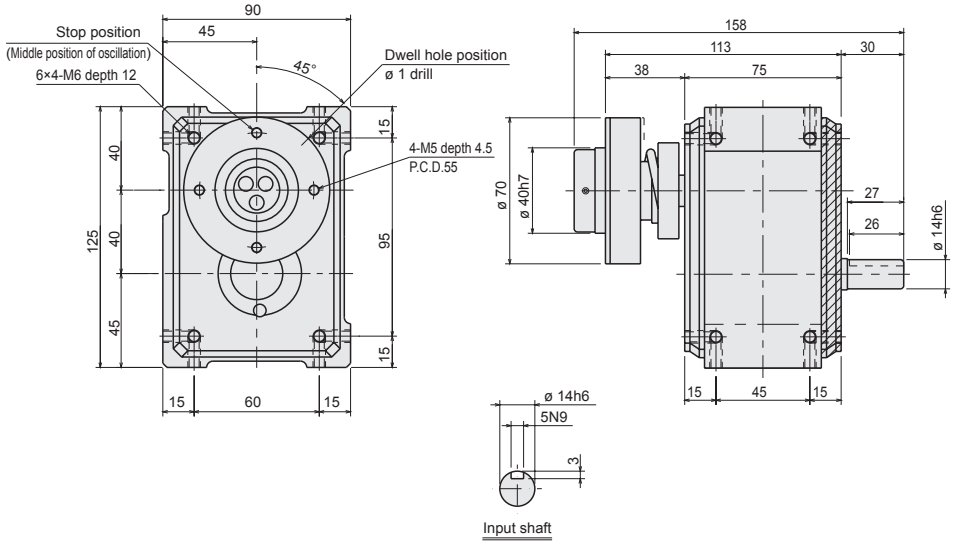

PC I S 040-□□□□□□1□-NNF-04□
PCOS 040

Option	Pick and Place drive		Parallel cam drive	Roller gear cam drive						
	Linear	Circular		Basic	Flat	Compact multi-index	Wide angle	Table	Standard	Compact

● Standard specifications

Dimensions

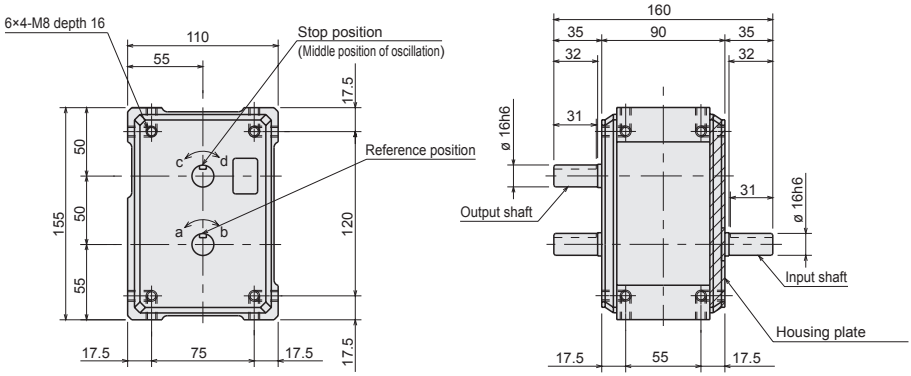

PC I S 050-□□□□□□3□
PCOS 050

Installation position and oil supply/drain port and oil level gauge positions

● Oil fill/drain port (Rc1/4)
○ Oil level gauge (ø 20)

Installation position	1	2	3
Series	PCIS/PCOS	PCIS/PCOS	PCIS/PCOS
Dimensions	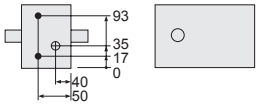	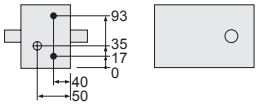	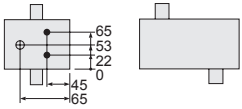

Installation position	4	5	6
Series	PCIS/PCOS	PCIS/PCOS	PCIS/PCOS
Dimensions	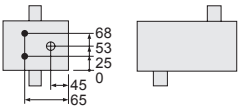	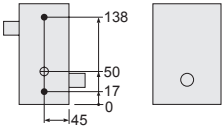	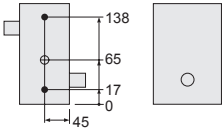

Characteristics

Descriptions	Unit	Characteristics	
		Output shaft	Input shaft
Allowable thrust force	N	1100	650
Allowable radial force	N	780	520
Allowable bending moment	N·m	26	-
Moment of inertia	$kg \cdot m^2$	3.51×10^{-4}	3.18×10^{-4}

Descriptions	Unit	Characteristics
Internal frictional torque (Tin)	N·m	1.7
Product weight	kg	6
Oil level	ℓ	0.2
Paint color		Silver

Accuracy

Index accuracy (sec.)		
Indexing accuracy	1 dwell	± 60
	2 dwell	± 140
	3 dwell	-
	4 dwell	-
Repeatability		60

Oscillating accuracy (sec.)	
Indexing accuracy	± 140
Repeatability	60

* For the dwell accuracy, please contact CKD.

List of index angles

Index series **PCIS 050** Cam curve/MS

Total index angle (θt) / Index number (n)		90	120	150	180	210	240	270	300	330
1 dwell	1								○	○
	2			○	○	○	○	○	○	○
	3	○	○	○	○	○	○	○	○	○
	4	○	○	○	○	○	○	○	○	○
2 dwell	6		○	○	○	○	○	○	○	○
	8	○	○	○	○	○	○	○	○	○

Cam curve/MC

Total index angle (θt) / Index number (n)		90	120	150	180	210	240	270	300	330
1 dwell	1					○	○	○	○	○
	2		○	○	○	○	○	○	○	○

Oscillating series **RCOS 050** Cam curve/MS

Total index angle (θt) / Oscillating angle (ψ)	60	90	120	180	240	300	360
45			○	○	○	○	○
30		○	○	○	○	○	○
15	○	○	○	○	○	○	○

Dimensions with options

With worm reducer (with HO32-C/B)

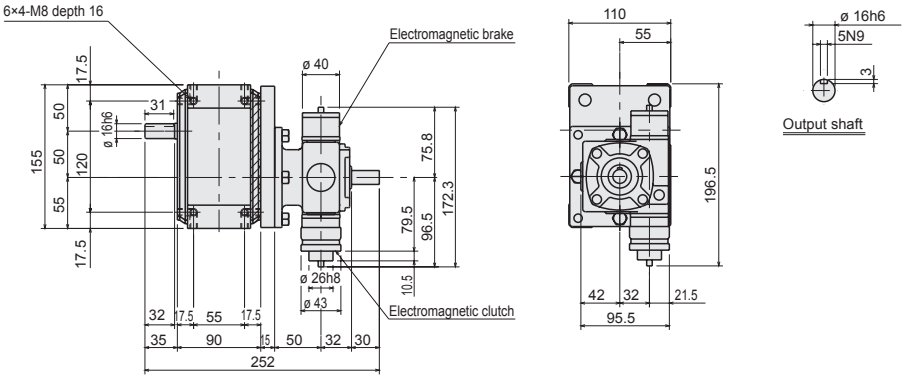

PC I S 050- ☐☐ ☐☐ ☐☐ 1 ☐ -NVN03 ☐ YG
PCOS 050

With worm reducer (without HO32-C/B)

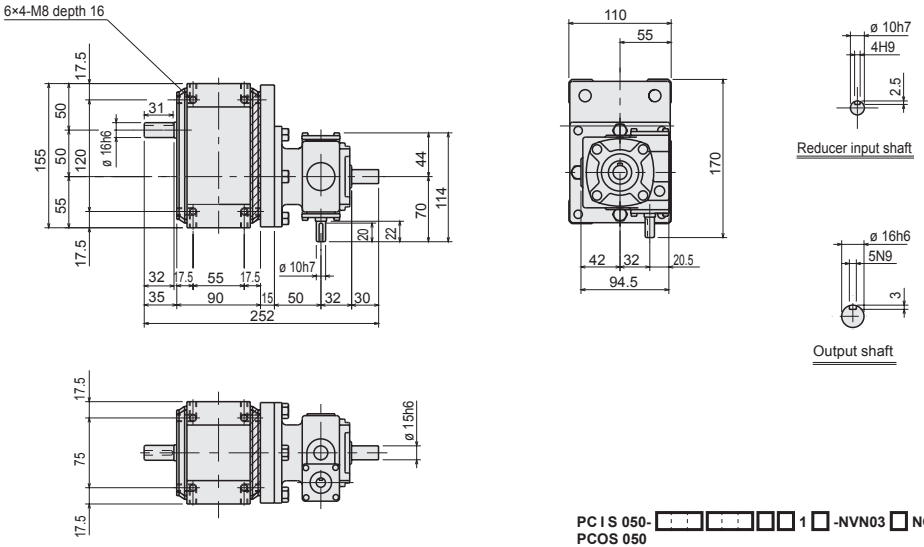

PC I S 050- ☐☐ ☐☐ ☐☐ 1 ☐ -NVN03 ☐ NG
PCOS 050

With Torque saver (TSF5)

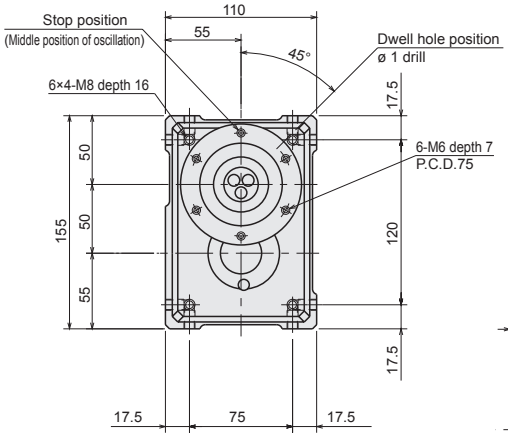

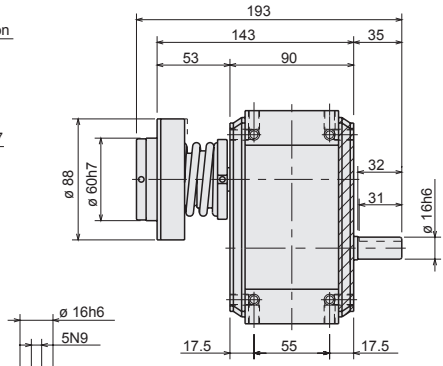

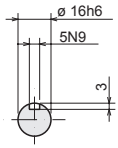

Input shaft

PC I S 050-□□□□□□1□-NNF-05□
PCOS 050

● Standard specifications

Dimensions

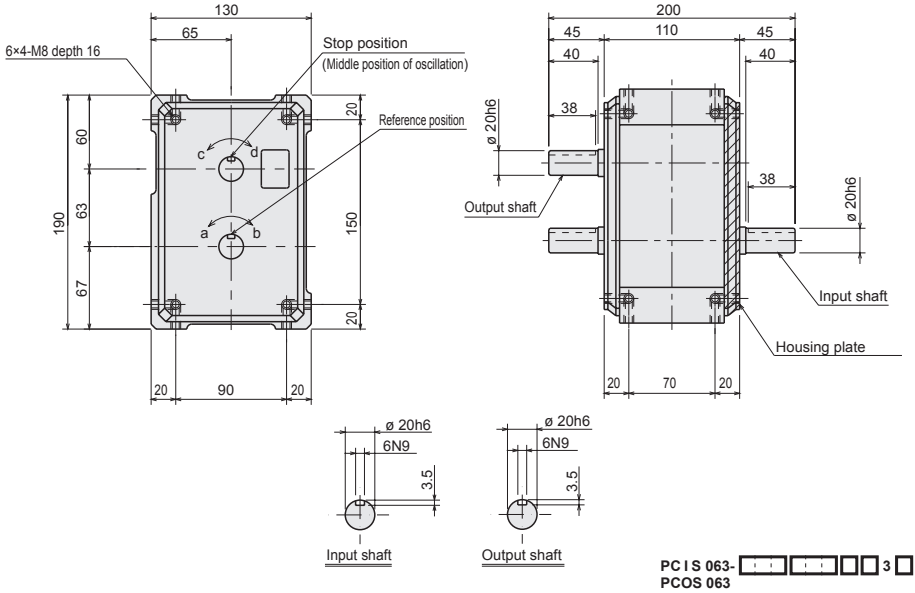

Installation position and oil supply/drain port and oil level gauge positions

● Oil fill/drain port (Rc1/4)
○ Oil level gauge (ø 20)

Installation position	1	2	3
Series	PCIS/PCOS	PCIS/PCOS	PCIS/PCOS
Dimensions	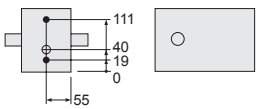	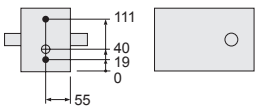	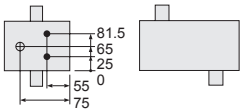

Installation position	4	5	6
Series	PCIS/PCOS	PCIS/PCOS	PCIS/PCOS
Dimensions	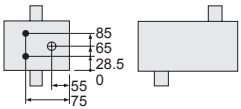	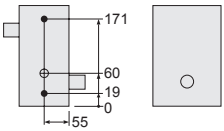	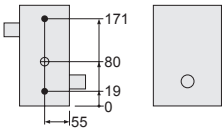

Characteristics

Descriptions	Unit	Characteristics	
		Output shaft	Input shaft
Allowable thrust force	N	2500	1800
Allowable radial force	N	1800	1400
Allowable bending moment	N·m	52	-
Moment of inertia	$kg \cdot m^2$	8.01×10^{-4}	1.27×10^{-3}

Descriptions	Unit	Characteristics
Internal frictional torque (Tin)	N·m	3.1
Product weight	kg	11
Oil level	ℓ	0.4
Paint color		Silver

Accuracy

Index accuracy (sec.)		
Indexing accuracy	1 dwell	±60
	2 dwell	±90
	3 dwell	-
	4 dwell	-
Repeatability		60

Oscillating accuracy (sec.)	
Indexing accuracy	±90
Repeatability	60

* For the dwell accuracy, please contact CKD.

List of index angles

Index series **PCIS 063** Cam curve/MS

Total index angle (θt) / Index number (n)		90	120	150	180	210	240	270	300	330
1 dwell	1								○	○
	2			○	○	○	○	○	○	○
	3	○	○	○	○	○	○	○	○	○
	4	○	○	○	○	○	○	○	○	○
2 dwell	6		○	○	○	○	○	○	○	○
	8	○	○	○	○	○	○	○	○	○

Cam curve/MC

Total index angle (θt) / Index number (n)		90	120	150	180	210	240	270	300	330
1 dwell	1					○	○	○	○	○
	2		○	○	○	○	○	○	○	○

Oscillating series **PCOS 063** Cam curve/MS

Total index angle (θt) / Oscillating angle (ψ)	60	90	120	180	240	300	360
45			○	○	○	○	○
30		○	○	○	○	○	○
15	○	○	○	○	○	○	○

Dimensions with options

With worm reducer (with HO40-C/B)

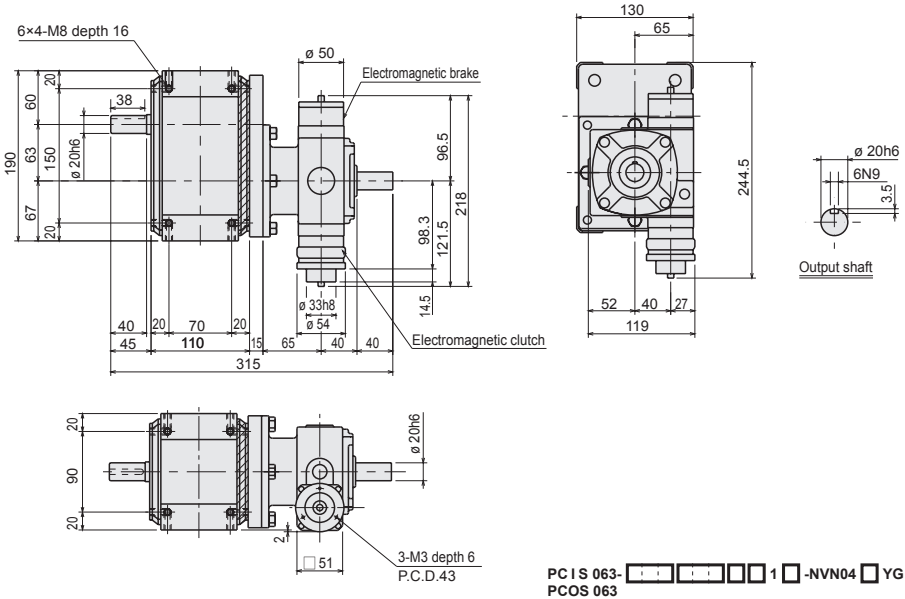

PC I S 063- □□□□□□1□-NVN04□YG
PCOS 063

With worm reducer (without HO40-C/B)

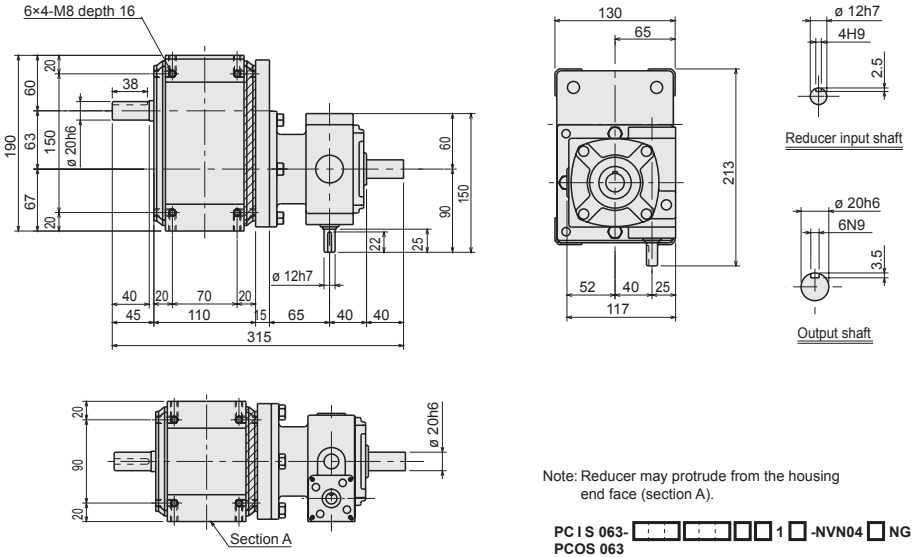

Note: Reducer may protrude from the housing end face (section A).

PC I S 063- □□□□□□1□-NVN04□NG
PCOS 063

With Torque saver (TSF5)

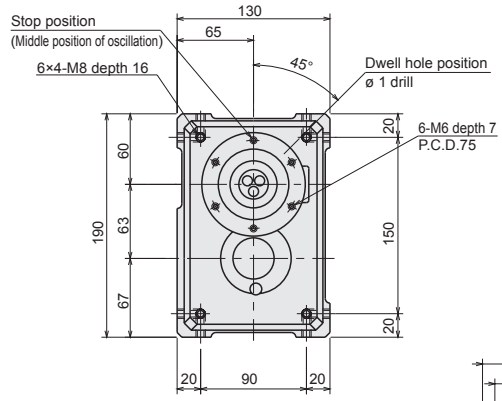

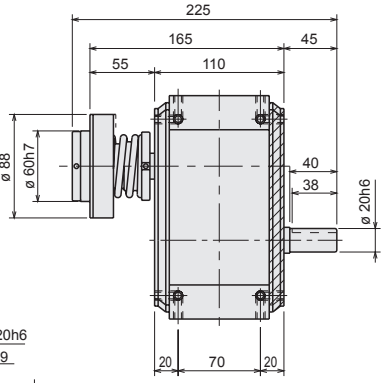

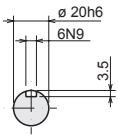

Input shaft

PC I S 063- ☐☐ ☐☐☐ **1** ☐ **-NNF-05** ☐
PCOS 063

With Torque saver (TSF6)

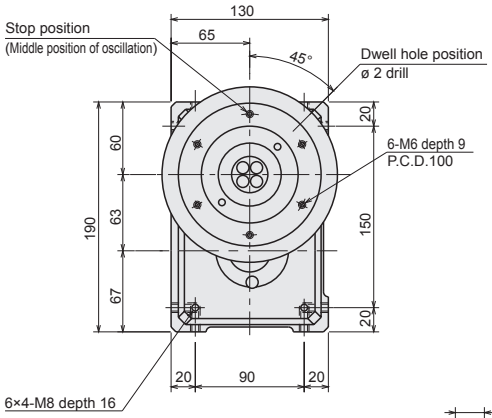

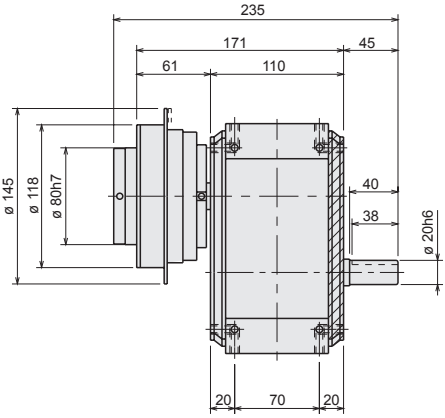

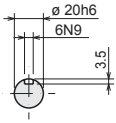

Input shaft

PC I S 063- ☐☐ ☐☐☐ **1** ☐ **-NNF-06** ☐
PCOS 063

● Standard specifications

Dimensions

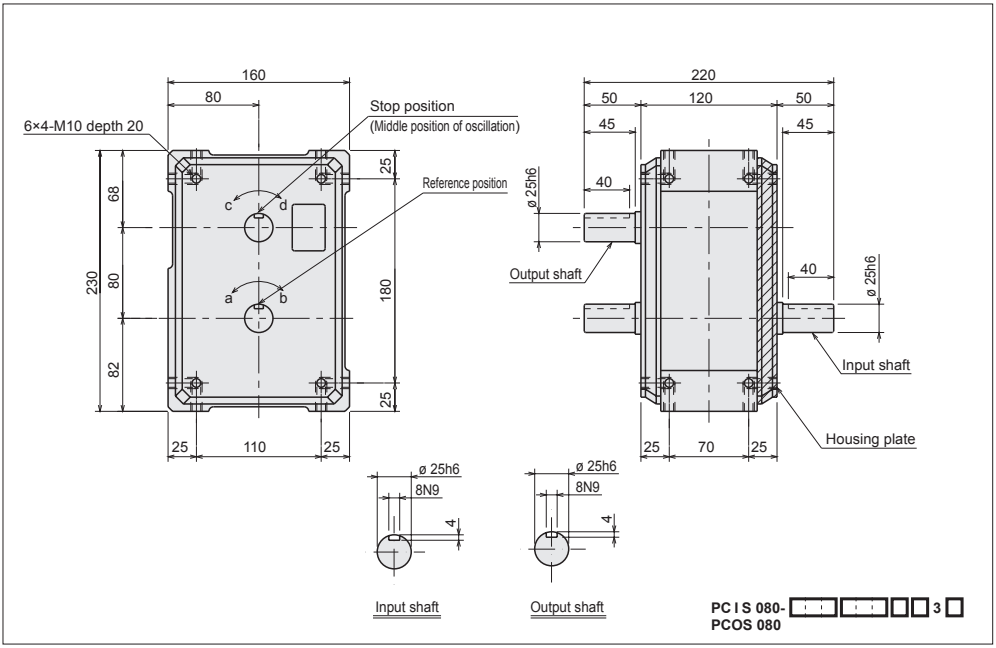

Installation position and oil supply/drain port and oil level gauge positions

● Oil fill/drain port (Rc3/8)
○ Oil level gauge (ø 30)

Installation position	1	2	3
Series	PCIS/PCOS	PCIS/PCOS	PCIS/PCOS
Dimensions	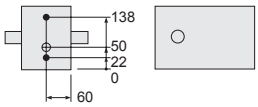	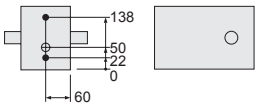	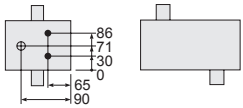

Installation position	4	5	6
Series	PCIS/PCOS	PCIS/PCOS	PCIS/PCOS
Dimensions	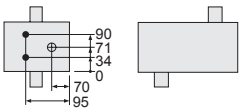	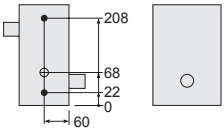	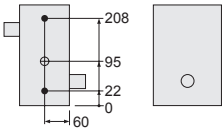

Characteristics

Descriptions	Unit	Characteristics	
		Output shaft	Input shaft
Allowable thrust force	N	3500	2500
Allowable radial force	N	2700	1800
Allowable bending moment	N·m	110	-
Moment of inertia	$kg \cdot m^2$	2.23×10^{-3}	3.73×10^{-3}

Descriptions	Unit	Characteristics
Internal frictional torque (Tin)	N·m	4.9
Product weight	kg	19
Oil level	ℓ	0.6
Paint color		Silver

Accuracy

Index accuracy (sec.)		
Indexing accuracy	1 dwell	± 60
	2 dwell	± 90
	3 dwell	-
	4 dwell	-
Repeatability		60

Oscillating accuracy (sec.)	
Indexing accuracy	± 90
Repeatability	60

* For the dwell accuracy, please contact CKD.

List of index angles

Index series **PCIS 080** Cam curve/MS

Total index angle (θt) / Index number (n)		90	120	150	180	210	240	270	300	330
1 dwell	1								○	○
	2			○	○	○	○	○	○	○
	3	○	○	○	○	○	○	○	○	○
	4	○	○	○	○	○	○	○	○	○
2 dwell	6		○	○	○	○	○	○	○	○
	8	○	○	○	○	○	○	○	○	○

Cam curve/MC

Total index angle (θt) / Index number (n)		90	120	150	180	210	240	270	300	330
1 dwell	1					○	○	○	○	○
	2		○	○	○	○	○	○	○	○

Oscillating series **PCOS 080** Cam curve/MS

Total index angle (θt) / Oscillating angle (ψ)	60	90	120	180	240	300	360
45			○	○	○	○	○
30		○	○	○	○	○	○
15	○	○	○	○	○	○	○

● Dimensions with options

With worm reducer (with HO50-C/B)

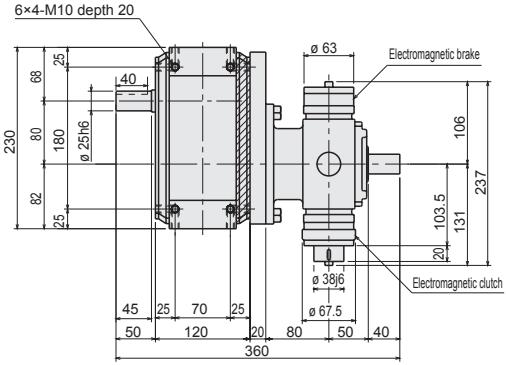

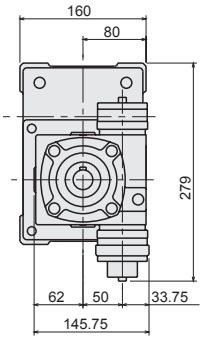

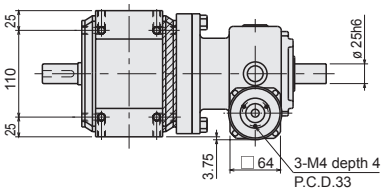

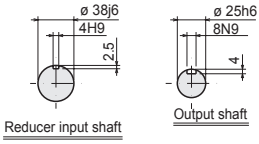

PC I S 080- ☐☐☐☐☐☐ **1** ☐ **-NVN05** ☐ **YG**
PCOS 080

With worm reducer (without HO50-C/B)

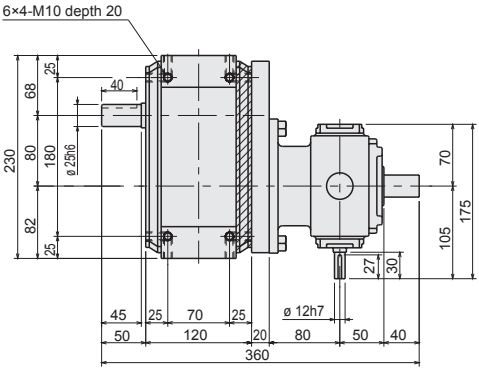

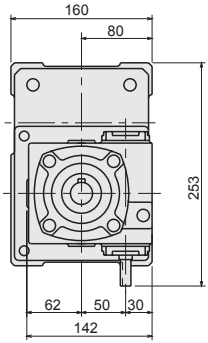

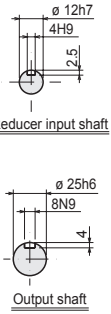

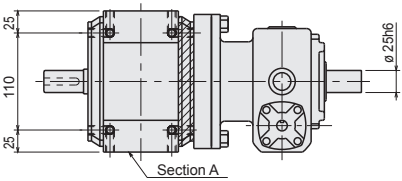

Note: Reducer may protrude from the housing end face (section A).

PC I S 080- ☐☐☐☐☐☐ **1** ☐ **-NVN05** ☐ **NG**
PCOS 080

With Torque saver (TSF6)

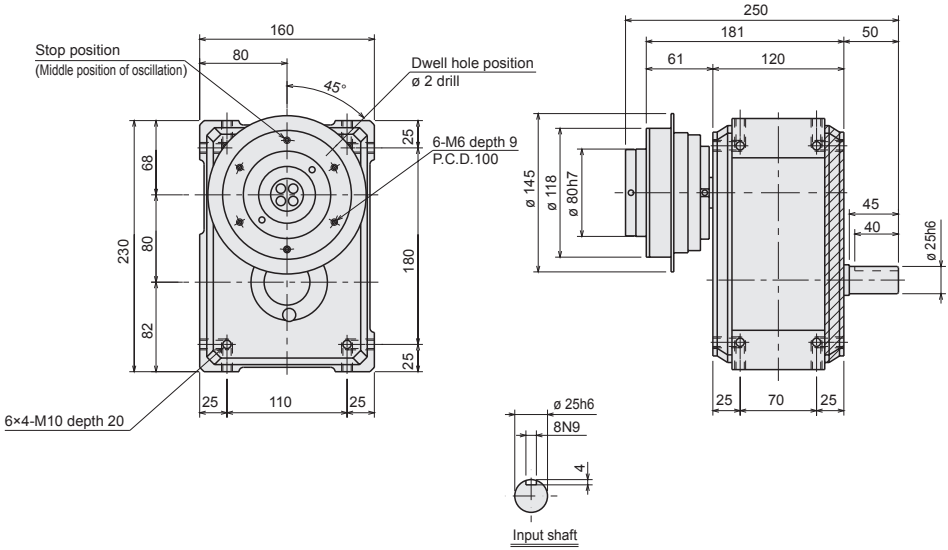

PC I S 080- ☐☐☐☐☐☐ **1** ☐ **-NNF-06** ☐
PCOS 080

● Standard specifications

Dimensions

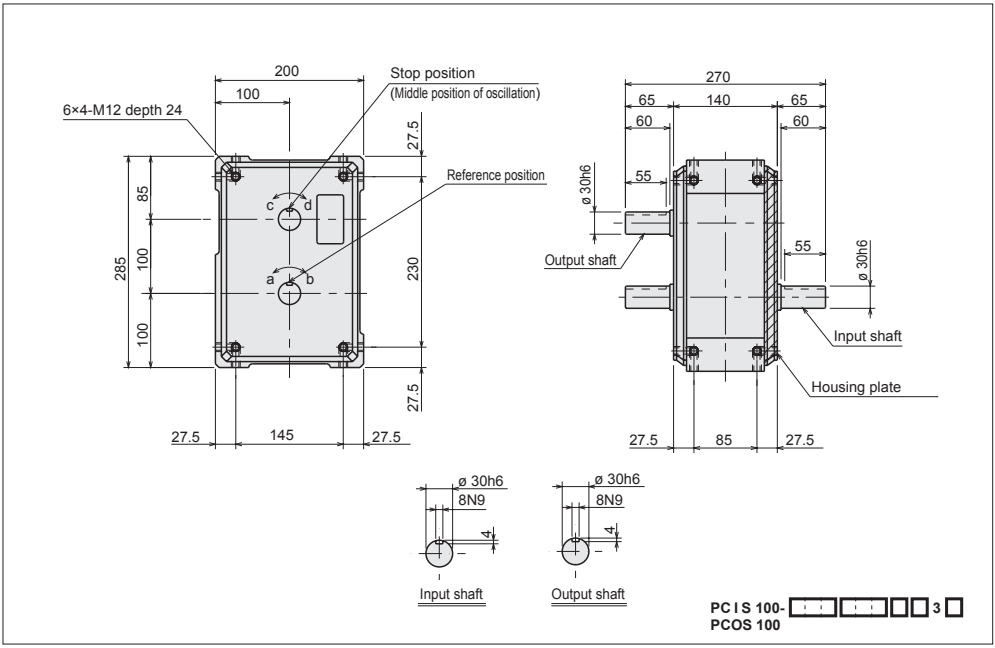

Installation position and oil supply/drain port and oil level gauge positions

● Oil fill/drain port (Rc3/8)
○ Oil level gauge (ø 30)

Installation position	1	2	3
Series	PCIS/PCOS	PCIS/PCOS	PCIS/PCOS
Dimensions	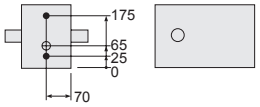	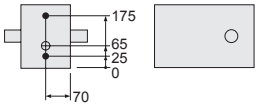	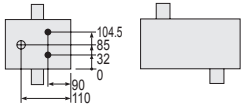

Installation position	4	5	6
Series	PCIS/PCOS	PCIS/PCOS	PCIS/PCOS
Dimensions	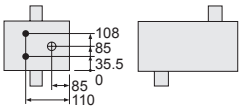	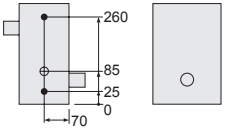	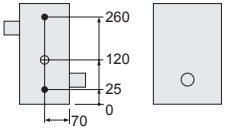

Characteristics

Descriptions	Unit	Characteristics	
		Output shaft	Input shaft
Allowable thrust force	N	5000	3500
Allowable radial force	N	3800	2500
Allowable bending moment	N·m	190	-
Moment of inertia	$kg \cdot m^2$	7.04×10^{-3}	1.04×10^{-2}

Descriptions	Unit	Characteristics
Internal frictional torque (Tin)	N·m	7.7
Product weight	kg	32
Oil level	ℓ	1.2
Paint color		Silver

Accuracy

Index accuracy (sec.)		
Indexing accuracy	1 dwell	± 60
	2 dwell	± 90
	3 dwell	-
	4 dwell	-
Repeatability		60

Oscillating accuracy (sec.)	
Indexing accuracy	± 90
Repeatability	60

* For the dwell accuracy, please contact CKD.

List of index angles

Index series **PCIS 100** Cam curve/MS

Total index angle (θt) / Index number (n)		90	120	150	180	210	240	270	300	330
1 dwell	1								○	○
	2			○	○	○	○	○	○	○
	3	○	○	○	○	○	○	○	○	○
	4	○	○	○	○	○	○	○	○	○
2 dwell	6		○	○	○	○	○	○	○	○
	8	○	○	○	○	○	○	○	○	○

Cam curve/MC

Total index angle (θt) / Index number (n)		90	120	150	180	210	240	270	300	330
1 dwell	1					○	○	○	○	○
	2		○	○	○	○	○	○	○	○

Oscillating series **PCOS 100** Cam curve/MS

Total index angle (θt) / Oscillating angle (ψ)	60	90	120	180	240	300	360
45			○	○	○	○	○
30		○	○	○	○	○	○
15	○	○	○	○	○	○	○

Dimensions with options

With worm reducer (with HO60-C/B)

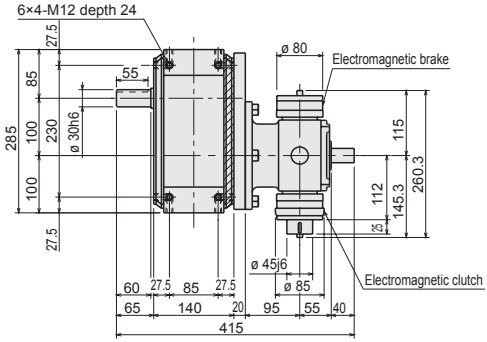

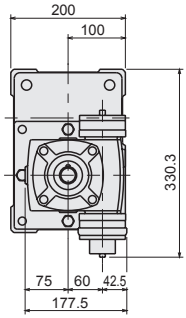

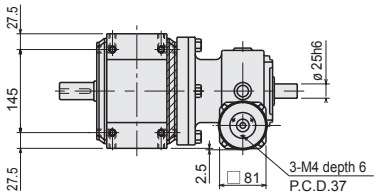

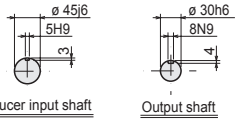

PC I S 100- □□□□□□1□**-NVN06**□**YG**
PCOS 100

With worm reducer (without HO60-C/B)

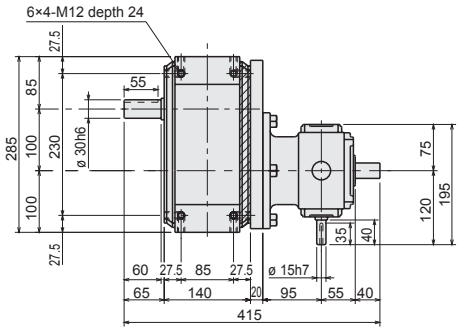

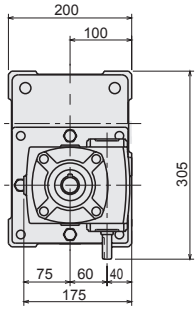

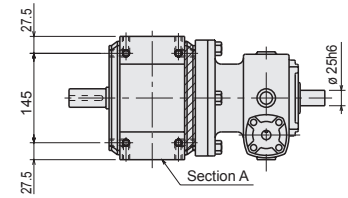

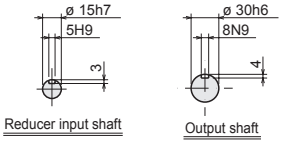

Note: Reducer may protrude from the housing end face (section A).

PC I S 100- □□□□□□1□**-NVN06**□**NG**
PCOS 100

With Torque saver (TSF8)

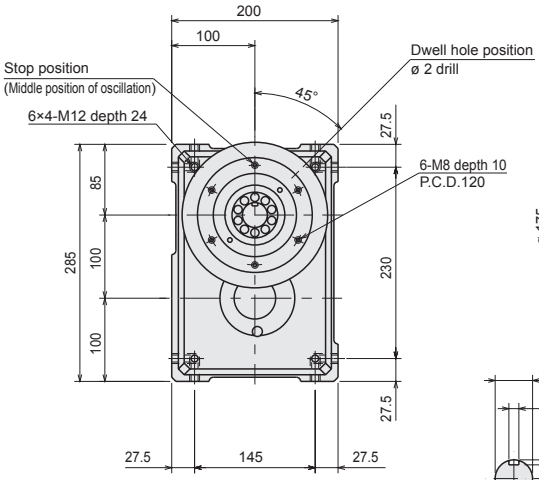

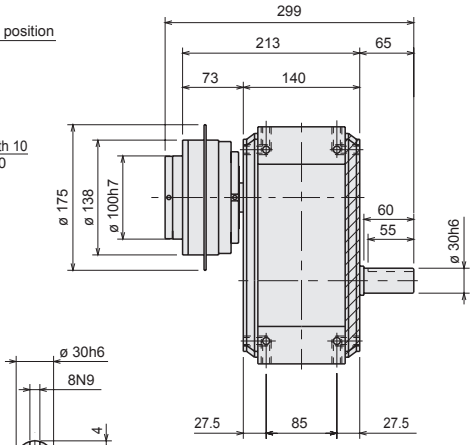

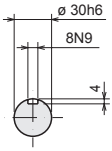

Input shaft

PC I S 100- ☐☐ ☐☐☐ **1** ☐ **-NNF-08** ☐
PCOS 100

● Standard specifications

Dimensions

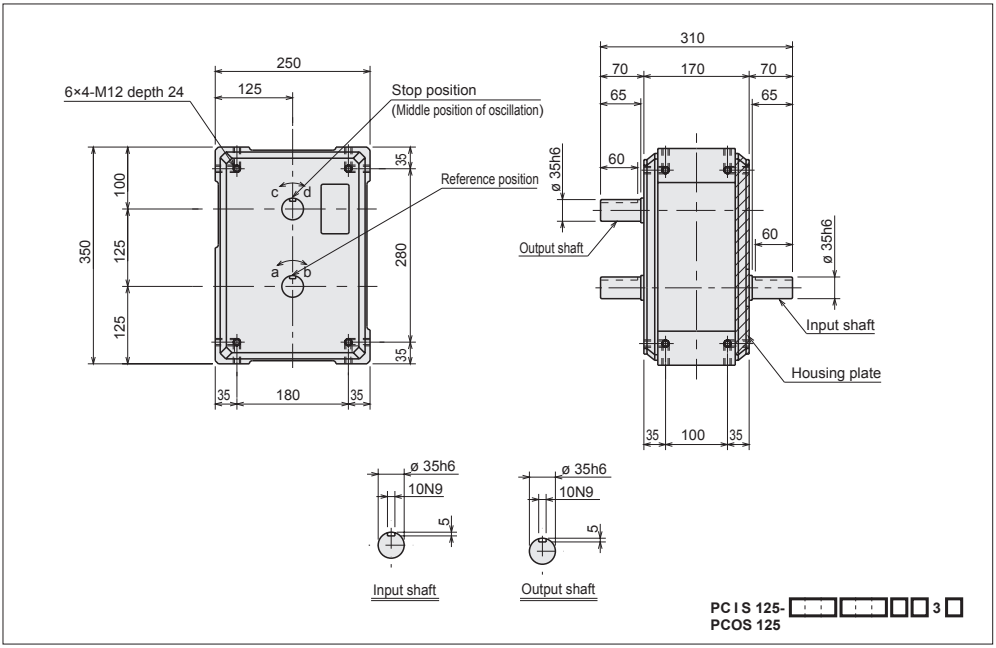

Installation position and oil supply/drain port and oil level gauge positions

● Oil fill/drain port (Rc3/8)
○ Oil level gauge (ø 30)

Installation position	1	2	3
Series	PCIS/PCOS	PCIS/PCOS	PCIS/PCOS
Dimensions	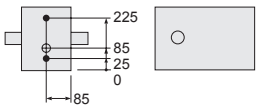	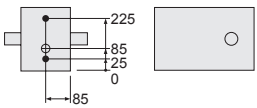	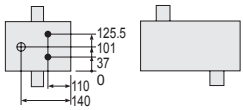

Installation position	4	5	6
Series	PCIS/PCOS	PCIS/PCOS	PCIS/PCOS
Dimensions	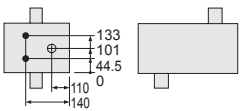	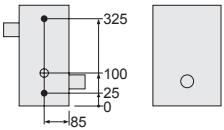	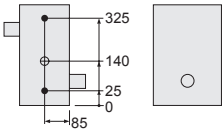

Characteristics

Descriptions	Unit	Characteristics	
		Output shaft	Input shaft
Allowable thrust force	N	5800	4000
Allowable radial force	N	5200	3200
Allowable bending moment	N·m	260	-
Moment of inertia	kg·m^2	1.86 × 10^{-2}	3.06 × 10^{-2}

Descriptions	Unit	Characteristics
Internal frictional torque (Tin)	N·m	12
Product weight	kg	62
Oil level	ℓ	2.5
Paint color		Silver

Accuracy

Index accuracy (sec.)		
Indexing accuracy	1 dwell	± 60
	2 dwell	± 90
	3 dwell	-
	4 dwell	-
Repeatability		60

Oscillating accuracy (sec.)	
Indexing accuracy	± 90
Repeatability	60

* For the dwell accuracy, please contact CKD.

List of index angles

Index series **PCIS 125** Cam curve/MS

Total index angle (θt) / Index number (n)		90	120	150	180	210	240	270	300	330
1 dwell	1								○	○
	2			○	○	○	○	○	○	○
	3	○	○	○	○	○	○	○	○	○
	4	○	○	○	○	○	○	○	○	○
2 dwell	6		○	○	○	○	○	○	○	○
	8	○	○	○	○	○	○	○	○	○

Cam curve/MC

Total index angle (θt) / Index number (n)		90	120	150	180	210	240	270	300	330
1 dwell	1					○	○	○	○	○
	2		○	○	○	○	○	○	○	○

Oscillating series **PCOS 125** Cam curve/MS

Total index angle (θt) / Oscillating angle (ψ)	60	90	120	180	240	300	360
45			○	○	○	○	○
30		○	○	○	○	○	○
15	○	○	○	○	○	○	○

Dimensions with options

With worm reducer (with HO80-C/B)

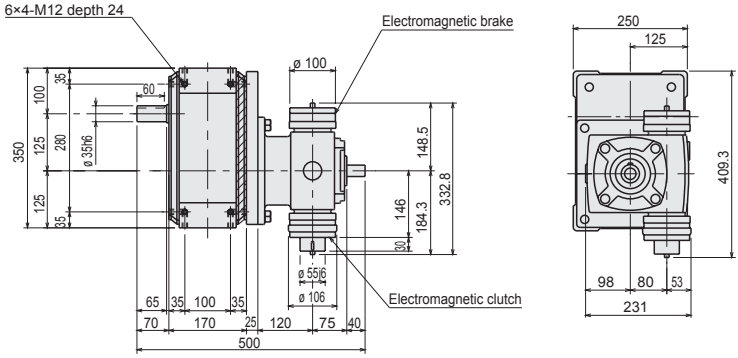

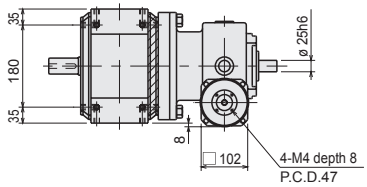

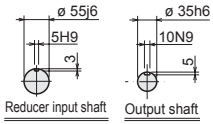

PC I S 125- □□□□□□ **1** □ **-NVN08** □ **YG**
PCOS 125

With worm reducer (without HO80-C/B)

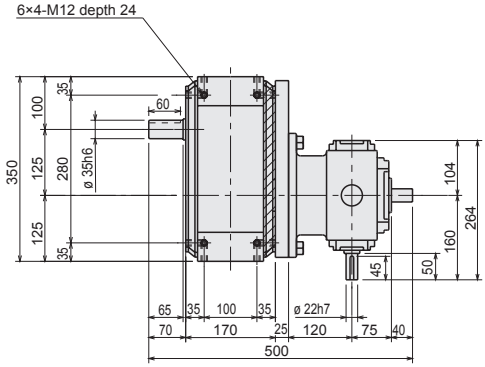

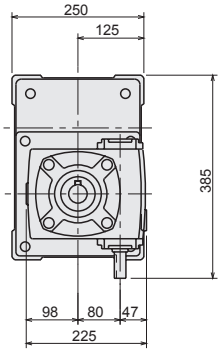

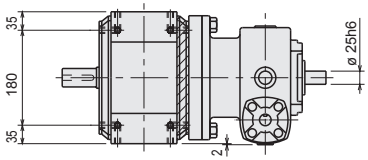

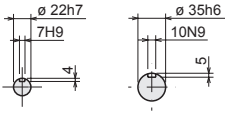

PC I S 125- □□□□□□ **1** □ **-NVN08** □ **NG**
PCOS 125

With Torque saver (TSF11)

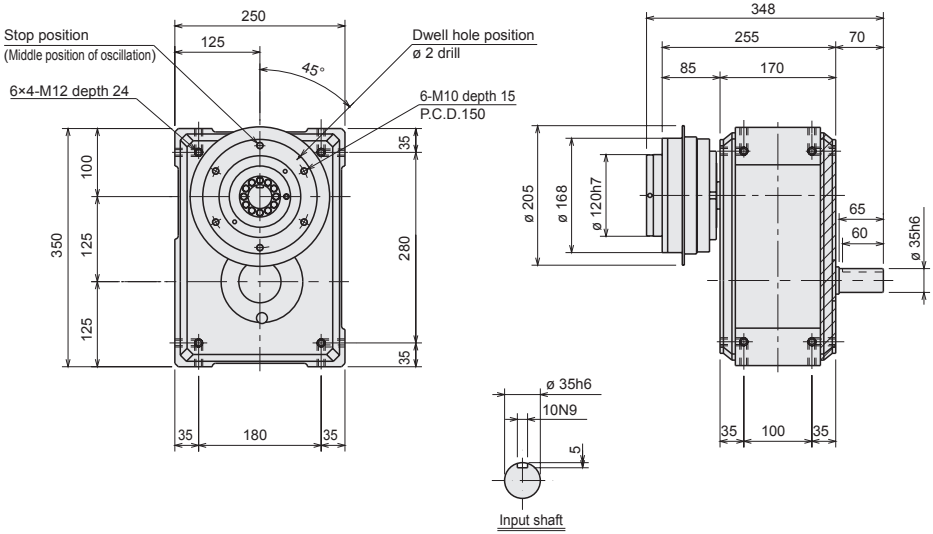

PC I S 125- [ ] [ ] [ ] [ ] **1** [ ] **-NNF-11** [ ]
PCOS 125

● Standard specifications

Dimensions

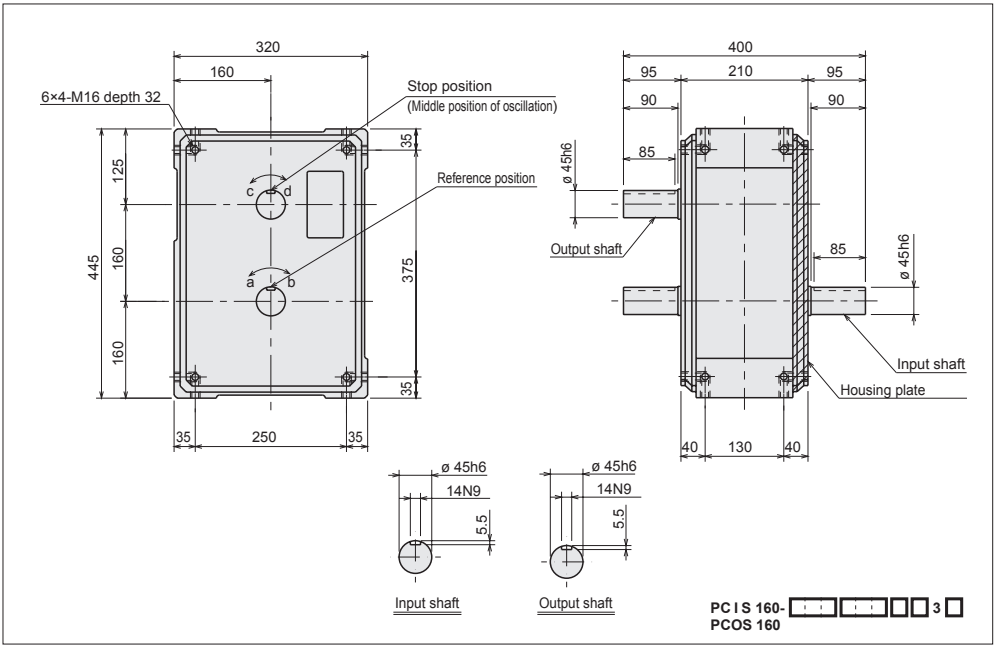

Installation position and oil supply/drain port and oil level gauge positions

● Oil fill/drain port (Rc1/2)
○ Oil level gauge (ø 30)

Installation position	1	2	3
Series	PCIS/PCOS	PCIS/PCOS	PCIS/PCOS
Dimensions	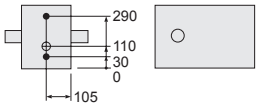	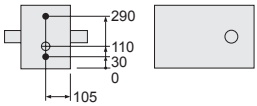	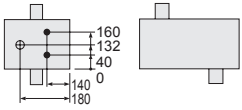

Installation position	4	5	6
Series	PCIS/PCOS	PCIS/PCOS	PCIS/PCOS
Dimensions	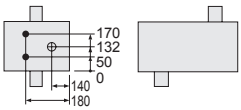	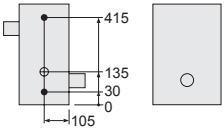	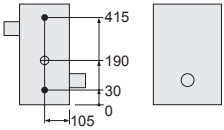

Characteristics

Descriptions	Unit	Characteristics	
		Output shaft	Input shaft
Allowable thrust force	N	8000	6200
Allowable radial force	N	6500	4000
Allowable bending moment	N·m	340	-
Moment of inertia	kg·m^2	0.084	0.11

Descriptions	Unit	Characteristics
Internal frictional torque (Tin)	N·m	20
Product weight	kg	130
Oil level	ℓ	4
Paint color		Silver

Accuracy

Index accuracy (sec.)		
Indexing accuracy	1 dwell	± 60
	2 dwell	± 90
	3 dwell	-
	4 dwell	-
Repeatability		60

Oscillating accuracy (sec.)	
Indexing accuracy	± 90
Repeatability	60

* For the dwell accuracy, please contact CKD.

List of index angles

Index series **PCIS 160** Cam curve/MS

Total index angle (θt) / Index number (n)		90	120	150	180	210	240	270	300	330
1 dwell	1								○	○
	2			○	○	○	○	○	○	○
	3	○	○	○	○	○	○	○	○	○
	4	○	○	○	○	○	○	○	○	○
2 dwell	6		○	○	○	○	○	○	○	○
	8	○	○	○	○	○	○	○	○	○

Cam curve/MC

Total index angle (θt) / Index number (n)		90	120	150	180	210	240	270	300	330
1 dwell	1					○	○	○	○	○
	2		○	○	○	○	○	○	○	○

Oscillating series **PCOS 160** Cam curve/MS

Total index angle (θt) / Oscillating angle (ψ)	60	90	120	180	240	300	360
45			○	○	○	○	○
30		○	○	○	○	○	○
15	○	○	○	○	○	○	○

● Dimensions with options

With worm reducer (with HO100-C/B)

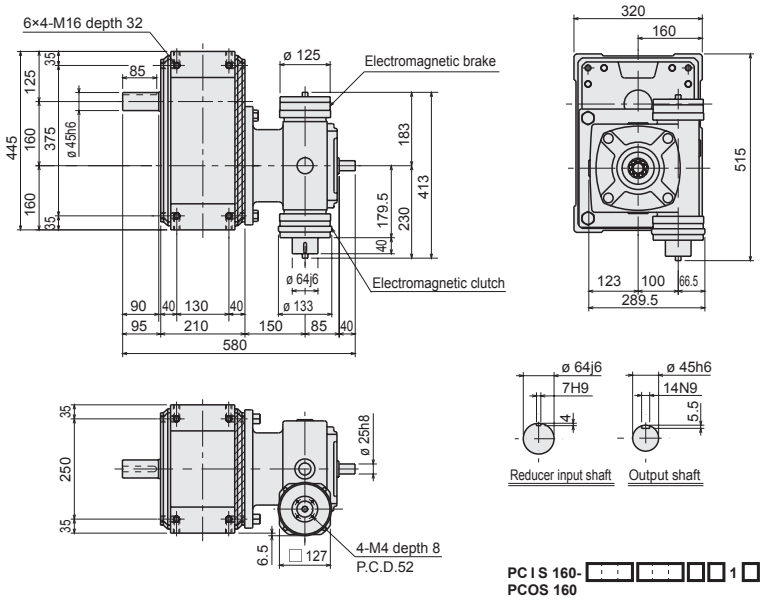

PC I S 160- □□□□□□1□**-NVN10**□**YG**
PCOS 160

With worm reducer (without HO100-C/B)

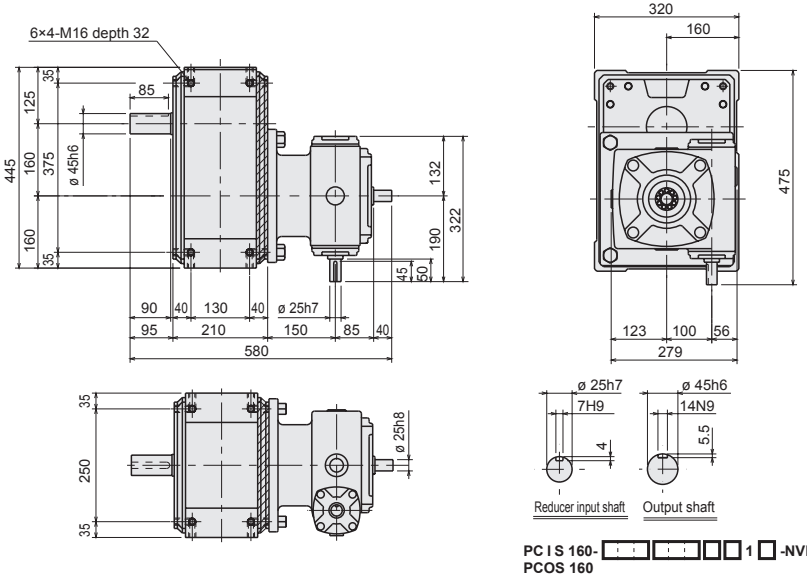

PC I S 160- □□□□□□1□**-NVN010**□**NG**
PCOS 160

With Torque saver (TSF14)

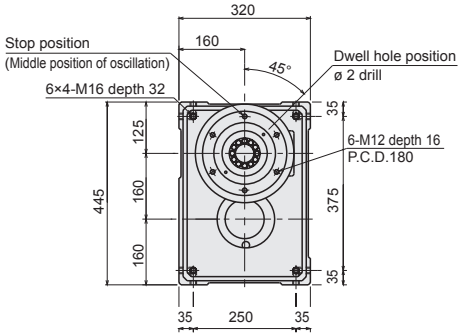

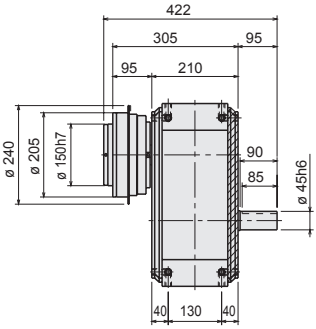

Input shaft

PC I S 160-□□□□□□1□-NNF-14□
PCOS 160

● Standard specifications

Dimensions

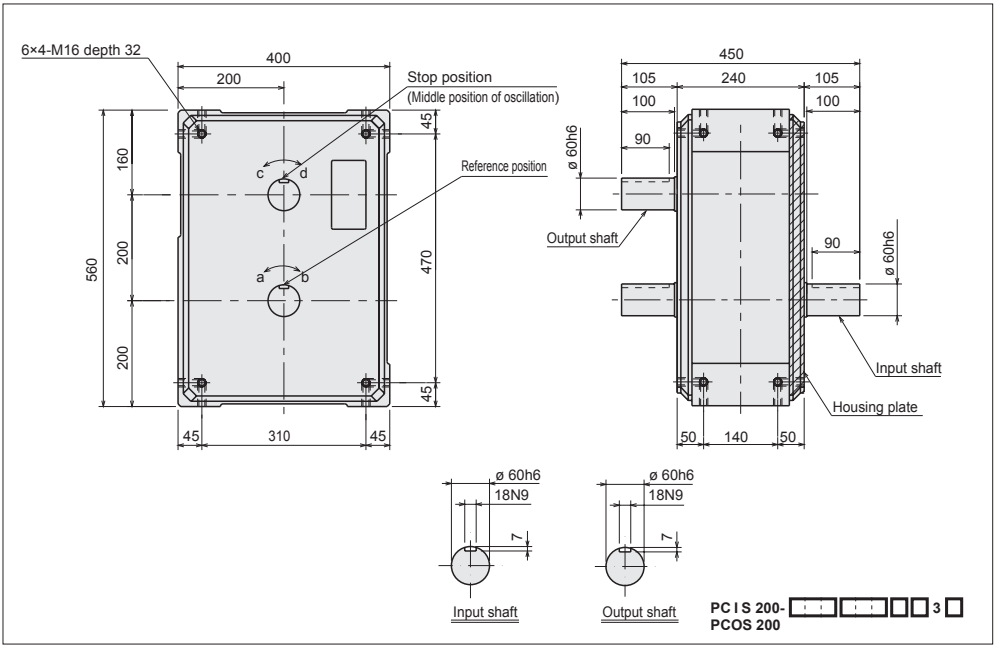

Installation position and oil supply/drain port and oil level gauge positions

● Oil fill/drain port (Rc1/2)
○ Oil level gauge (ø 30)

Installation position	1	2	3
Series	PCIS/PCOS	PCIS/PCOS	PCIS/PCOS
Dimensions	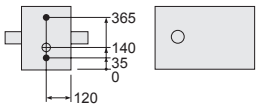	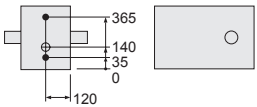	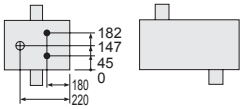

Installation position	4	5	6
Series	PCIS/PCOS	PCIS/PCOS	PCIS/PCOS
Dimensions	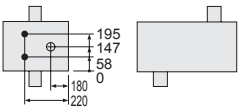	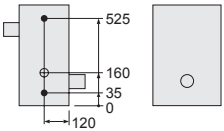	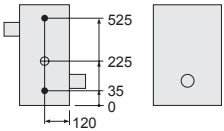

Characteristics

Descriptions	Unit	Characteristics	
		Output shaft	Input shaft
Allowable thrust force	N	14000	10000
Allowable radial force	N	11000	7500
Allowable bending moment	N·m	1200	-
Moment of inertia	kg·m^2	0.19	0.32

Descriptions	Unit	Characteristics
Internal frictional torque (Tin)	N·m	31
Product weight	kg	240
Oil level	ℓ	7
Paint color		Silver

Accuracy

Index accuracy (sec.)		
Indexing accuracy	1 dwell	± 60
	2 dwell	± 90
	3 dwell	-
	4 dwell	-
Repeatability		60

Oscillating accuracy (sec.)	
Indexing accuracy	± 90
Repeatability	60

* For the dwell accuracy, please contact CKD.

List of index angles

Index series **PCIS 200** Cam curve/MS

Total index angle (θt) / Index number (n)		90	120	150	180	210	240	270	300	330
1 dwell	1								○	○
	2			○	○	○	○	○	○	○
	3	○	○	○	○	○	○	○	○	○
	4	○	○	○	○	○	○	○	○	○
2 dwell	6		○	○	○	○	○	○	○	○
	8	○	○	○	○	○	○	○	○	○

Cam curve/MC

Total index angle (θt) / Index number (n)		90	120	150	180	210	240	270	300	330
1 dwell	1					○	○	○	○	○
	2		○	○	○	○	○	○	○	○

Oscillating series **PCOS 200** Cam curve/MS

Total index angle (θt) / Oscillating angle (ψ)	60	90	120	180	240	300	360
45			○	○	○	○	○
30		○	○	○	○	○	○
15	○	○	○	○	○	○	○

Dimensions with options

With worm reducer (with HO100-C/B)

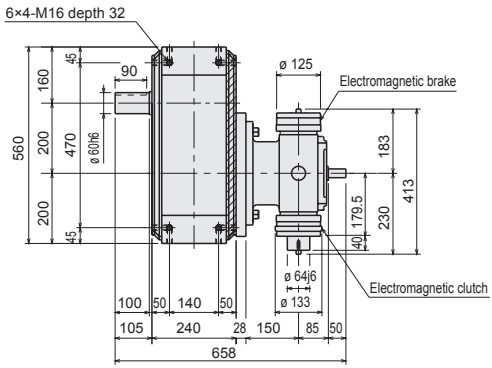

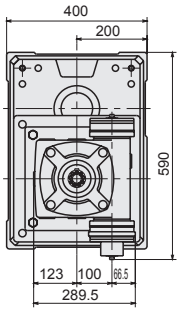

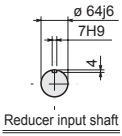

Reducer input shaft

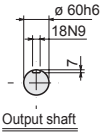

Output shaft

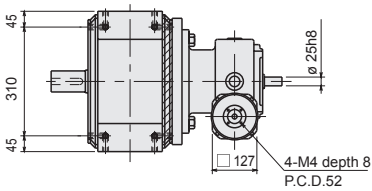

PC I S 200- □□□□□□1□**-NVN10**□**YG**
PCOS 200

With worm reducer (without HO100-C/B)

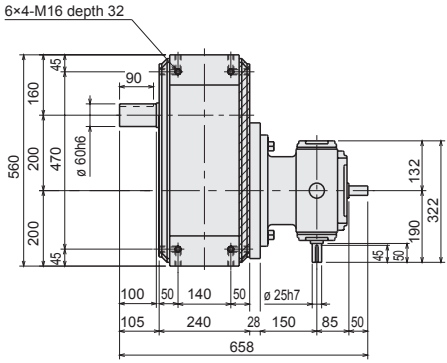

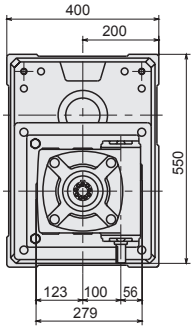

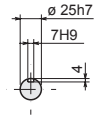

Reducer input shaft

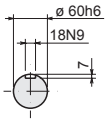

Output shaft

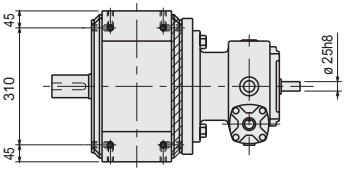

PC I S 200- □□□□□□1□**-NVN10**□**NG**
PCOS 200

With worm reducer (with HO135-C/B)

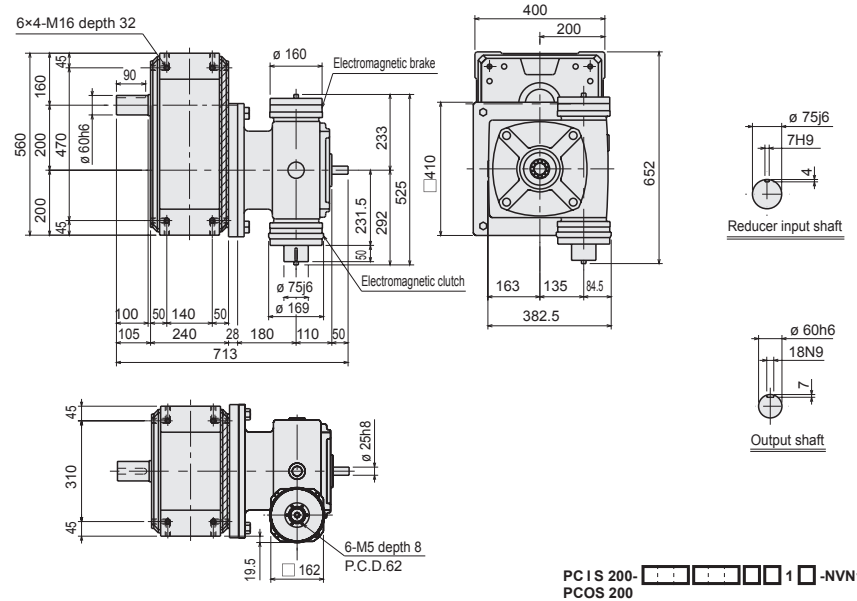

PC I S 200- [ ][ ][ ][ ] **1** [ ] **-NVN13** [ ] **YG**
PCOS 200

With worm reducer (without HO135-C/B)

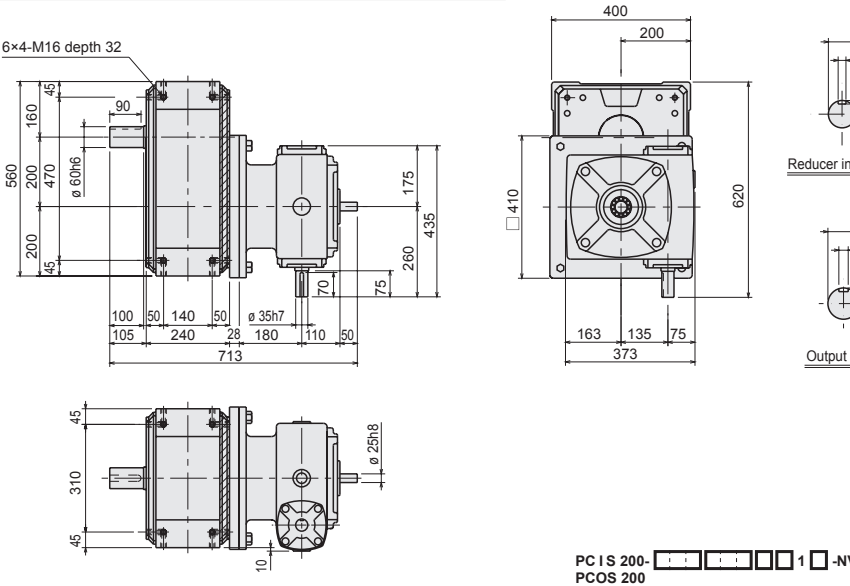

PC I S 200- [ ][ ][ ][ ] **1** [ ] **-NVN13** [ ] **NG**
PCOS 200

Dimensions with options

With Torque saver (TSF18)

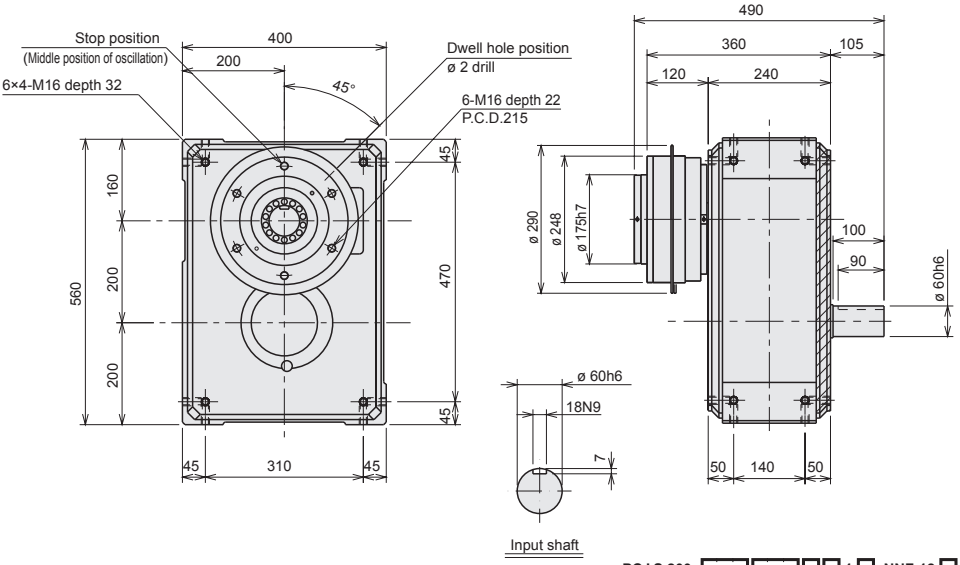

PC I S 200-□□□□□□1□-NNF-18□
PCOS 200

MEMO

● Standard specifications

Dimensions

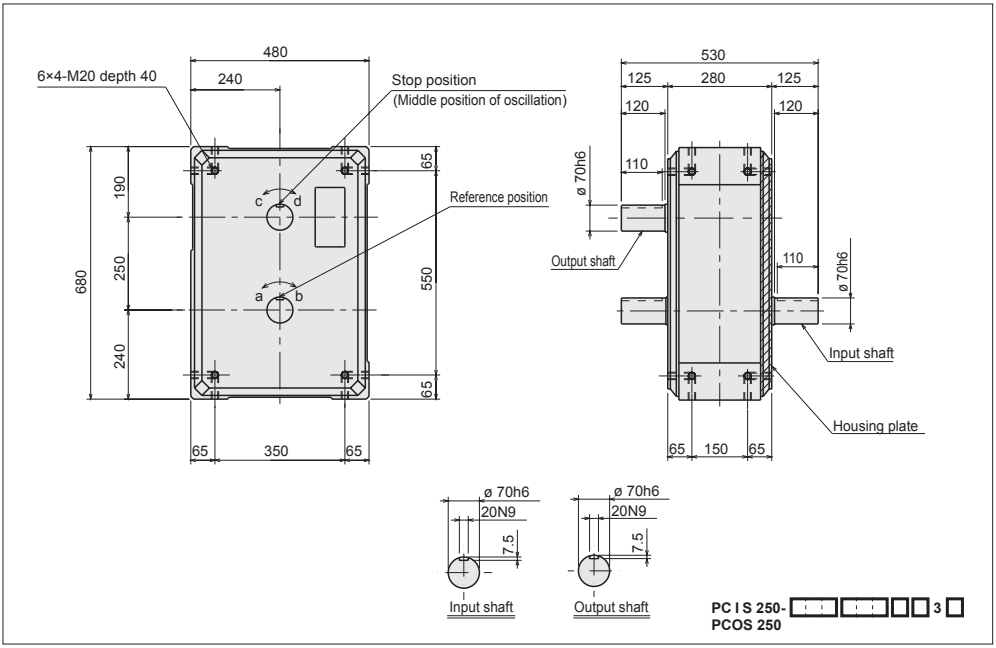

Installation position and oil supply/drain port and oil level gauge positions

● Oil fill/drain port (Rc 1/2)
○ Oil level gauge (ø 30)

Installation position	1	2	3
Series	PCIS/PCOS	PCIS/PCOS	PCIS/PCOS
Dimensions	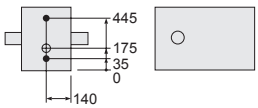	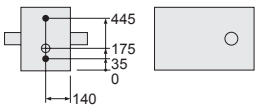	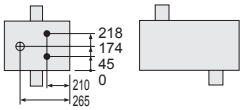

Installation position	4	5	6
Series	PCIS/PCOS	PCIS/PCOS	PCIS/PCOS
Dimensions	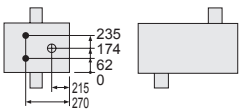	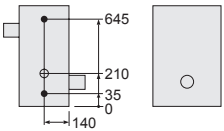	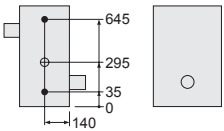

Characteristics

Descriptions	Unit	Characteristics	
		Output shaft	Input shaft
Allowable thrust force	N	18000	15000
Allowable radial force	N	15000	12000
Allowable bending moment	N·m	2100	-
Moment of inertia	kg·m^2	0.51	0.73

Descriptions	Unit	Characteristics
Internal frictional torque (Tin)	N·m	48
Product weight	kg	400
Oil level	ℓ	13
Paint color		Silver

Accuracy

Index accuracy (sec.)		
Indexing accuracy	1 dwell	± 60
	2 dwell	± 90
	3 dwell	-
	4 dwell	-
Repeatability		60

Oscillating accuracy (sec.)	
Indexing accuracy	± 90
Repeatability	60

* For the dwell accuracy, please contact CKD.

List of index angles

Index series **PCIS 250** Cam curve/MS

Total index angle (θt) / Index number (n)		90	120	150	180	210	240	270	300	330
1 dwell	1								○	○
	2			○	○	○	○	○	○	○
	3	○	○	○	○	○	○	○	○	○
	4	○	○	○	○	○	○	○	○	○
2 dwell	6		○	○	○	○	○	○	○	○
	8	○	○	○	○	○	○	○	○	○

Cam curve/MC

Total index angle (θt) / Index number (n)		90	120	150	180	210	240	270	300	330
1 dwell	1					○	○	○	○	○
	2		○	○	○	○	○	○	○	○

Oscillating series **PCOS 250** Cam curve/MS

Total index angle (θt) / Oscillating angle (ψ)	60	90	120	180	240	300	360
45			○	○	○	○	○
30		○	○	○	○	○	○
15	○	○	○	○	○	○	○

Dimensions with options

With worm reducer (with HO135-C/B)

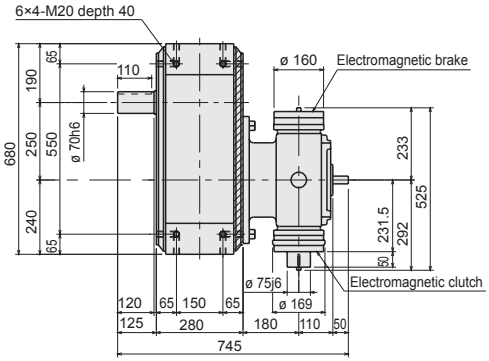

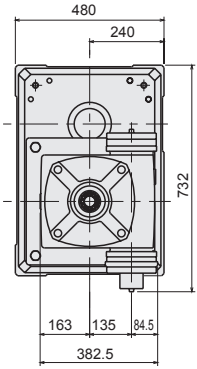

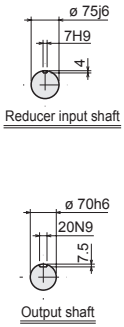

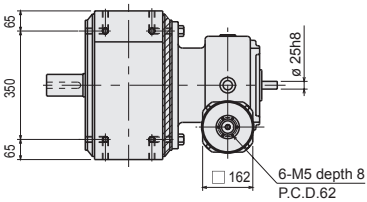

PC I S 250- □□□□□□1□-NVN13□YG
PCOS 250

With worm reducer (without HO135-C/B)

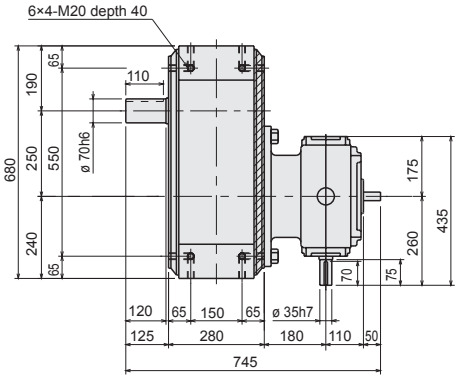

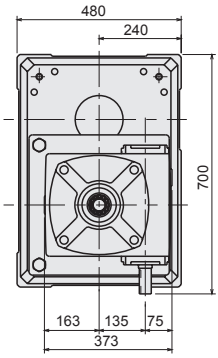

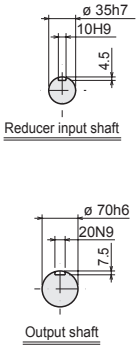

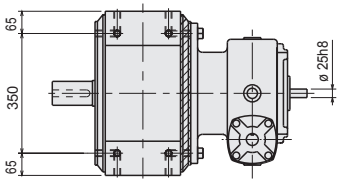

PC I S 250- □□□□□□1□-NVN13□NG
PCOS 250

With Torque saver (TSF18)

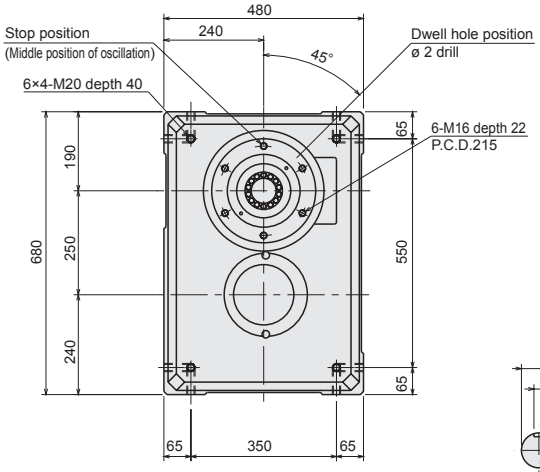

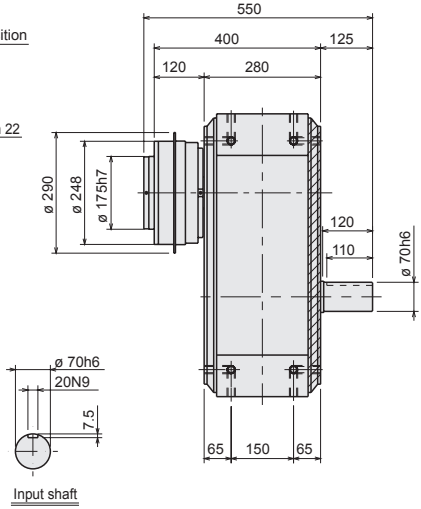

PC I S 250- ☐☐☐☐☐☐ **1** ☐ **-NNF-18** ☐
PCOS 250