SXYxC

4 axes / ZRSC

● Clean type ● Cable duct ● ZR-axis integrated type

Ordering method

SXYxC -	D	-	-	-	-	15	-	RCX240	-	-	-	BB
Model	Cable	Combination	X axis stroke	Y axis stroke	ZR axxis	Z axis stroke	Cable length	Controller	Usable for CE	Expansion I/O Note 1	Network optuon	Battery
	D: Cable duct	T1 T3	15 to 105cm	15 to 65cm	ZRSC12 ZRSC6		3L: 3.5m (Standard 5L: 5m 10L: 10m		No entry: Standard E: CE marking	N, P: Standard I/O 16/8 N1, P1: 40/24 N2, P2: 64/40 N3, P3: 88/56 N4, P4: 112/72	No entry: None CC: CC-Link DN: DeviceNet PB: Profibus EN: Ethernet YC: YC-Link No e 2	BB: 4 pcs

Note 1. Use N to N4 when NPN is selected on the I/O board, and P to P4 when PNP is selected.
Note 2. Available only for the master.

Basic specifications

	X axis	Y axis	Z axis ZRSC12	Z axis ZRSC6	R axis
Axis construction Note 1	C14H	C14	–		R5
AC servo motor output (W)	200	100	60		100
Repeatability Note 2 (XYZ mm) (R)	+/-0.01	+/-0.01	+/-0.02		+/-0.005
Drive system	Ball screw (Class C7)	Ball screw (Class C7)	Ball screw (Class C10)		Harmonic gear
Ball screw lead (Deceleration ratio) (mm)	20	20	12	6	(1/50)
Maximum speed Note 3 (XYZ: mm/sec) (R: /sec)	1000	1000	1000	500	1020
Moving range (XYZ mm) (R)	150 to 1050	150 to 650	150		360
Robot cable length (m)	Standard: 3.5 Option: 5, 10				
Degree of cleanliness	CLASS 10 Note				
Intake air (Nℓ/min)	90 Note 5				

Note 1. Use caution that the frame machining (installation holes, tap holes) differs from single-axis robots'.
Note 2. Positioning repeatability in one direction.
Note 3. When the X-axis stroke is longer than 850mm, resonance of the ball screw may occur depending on the operation conditions (critical speed). In this case, reduce the speed setting on the program by referring to the maximum speeds shown in the table below.
Note 4. Per 1cf (0.1μm base), when suction blower is used.
Note 5. The necessary intake amount varies depending on the use conditions and environment.

Maximum payload (kg)

Y stroke (mm)	ZRSC12	ZRSC6
150	3	5
250		
350		
450		
550		
650		4

Controller

Controller	Operation method
RCX240	Programming / /O point trace / Remote command / Operation using RS-232C communication

SXYxC 4 axes / ZRSC T1

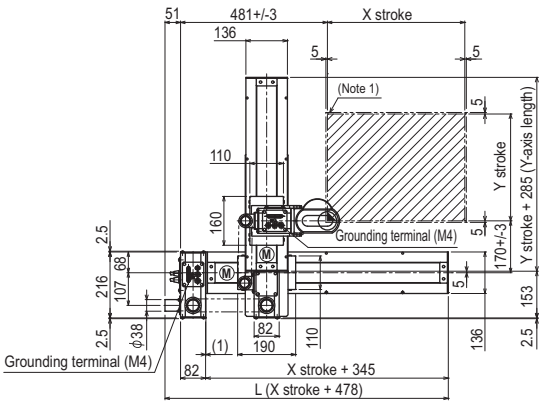

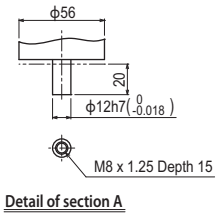

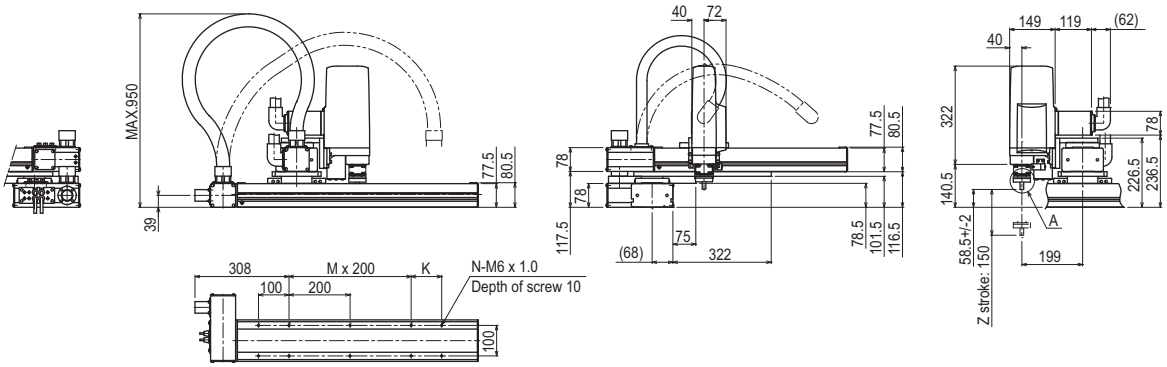

X stroke	150	250	350	450	550	650	750	850	950	1050
L	628	728	828	928	1028	1128	1228	1328	1428	1528
K	200	100	200	100	200	100	200	100	200	100
M	0	1	1	2	2	3	3	4	4	5
N	6	8	8	10	10	12	12	14	14	16

Y stroke	150	250	350	450	550	650

Z stroke	150

Maximum speed for each stroke (mm/sec) Note 2					
X axis	1000	800	650	550
Speed setting	–	80%	65%	55%

Note 1. The moving range when returning to origin and the stop position when stopping by mechanical stopper.

Note 2. When the X-axis stroke is longer than 850mm, resonance of the ball screw may occur depending on the operation conditions (critical speed). In this case, reduce the speed setting on the program by referring to the maximum speeds shown in the table at the left.

SXYxC 4 axes / ZRSC T3

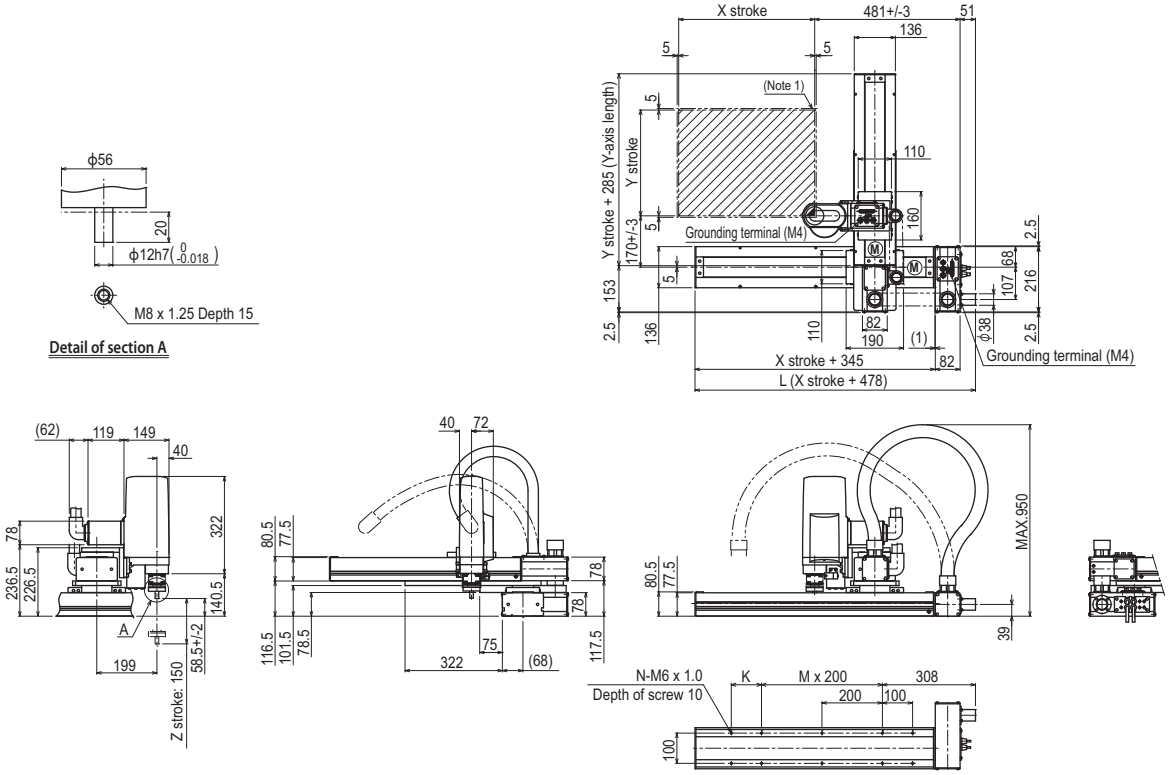

X stroke	150	250	350	450	550	650	750	850	950	1050
L	628	728	828	928	1028	1128	1228	1328	1428	1528
K	200	100	200	100	200	100	200	100	200	100
M	0	1	1	2	2	3	3	4	4	5
N	6	8	8	10	10	12	12	14	14	16

Y stroke	150	250	350	450	550	650

Z stroke	150

Maximum speed for each stroke (mm/sec) Note 2	X axis	1000	800	650	550
	Speed setting	–	80%	65%	55%

Note 1. The moving range when returning to origin and the stop position when stopping by mechanical stopper.

Note 2. When the X-axis stroke is longer than 850mm, resonance of the ball screw may occur depending on the operation conditions (critical speed). In this case, reduce the speed setting on the program by referring to the maximum speeds shown in the table at the left.