SXYxC 2 axes

Clean type Cable duct

Ordering method

SXYxC - D - [ ] - [ ] - [ ] - [ ] - RCX222 - [ ] - [ ] - [ ]

Model	Cable	Combination	X axis stroke	Y axis stroke	Cable length	Controller	Usable for CE	Input/Output selection 1	Input/Output selection 2
	D: Cable duct	T1 T3	15 to 105cm	15 to 65cm	3L: 3.5m (Standard) 5L: 5m 10L: 10m	RCX222 DRCX1005 Note 1	No entry: Standard E: CE marking	N: NPN Note 2 P: PNP CC: CC-Link DN: DeviceNet PB: Profibus EN: Ethernet No e 2 YC: YC-Link No e 3	No entry: None N1: OP.DIO24/16 (NPN) Note 2 P1: OP.DIO24/17 (PNP) EN: Ethernet Note 2 Note

Note 1. To find DRCX selection options, see the ordering method on P. 387.
Note 2. NPN and Ethernet cannot be selected if using CE marking.
Note 3. Available only for the master.
Note 4. Only when CC or DN or PB was selected for I/O select 1 above, EN can be selected in I/O select 2.

Basic specifications

	X axis	Y axis
Axis construction Note 1	C14H	C14
AC servo motor output (W)	200	100
Repeatability Note 2 (mm)	+/-0.01	+/-0.01
Drive system	Ball screw (Class C7)	Ball screw (Class C7)
Ball screw lead (Deceleration ratio) (mm)	20	20
Maximum speed Note 3 (mm/sec)	1000	1000
Moving range (mm)	150 to 1050	150 to 650
Robot cable length (m)	Standard: 3.5 Option: 5, 10	
Degree of cleanliness	CLASS 10 Note	
Intake air (Nℓ/min)	60 Note 5	

Note 1. Use caution that the frame machining (installation holes, tap holes) differs from single-axis robots'.
Note 2. Positioning repeatability in one direction.
Note 3. When the X-axis stroke is longer than 850mm, resonance of the ball screw may occur depending on the operation conditions (critical speed). In this case, reduce the speed setting on the program by referring to the maximum speeds shown in the table below.
Note 4. Per 1cf (0.1μm base), when suction blower is used.
Note 5. The necessary intake amount varies depending on the use conditions and environment.

Maximum payload (kg)

Y stroke (mm)	XY 2 axes
150	20
250	17
350	15
450	13
550	11
650	9

Controller

Controller	Operation method
RCX222	Programming / /O point trace / Remote command / Operation using RS-232C communication
DRCX1005	

SXYxC 2 axes T1

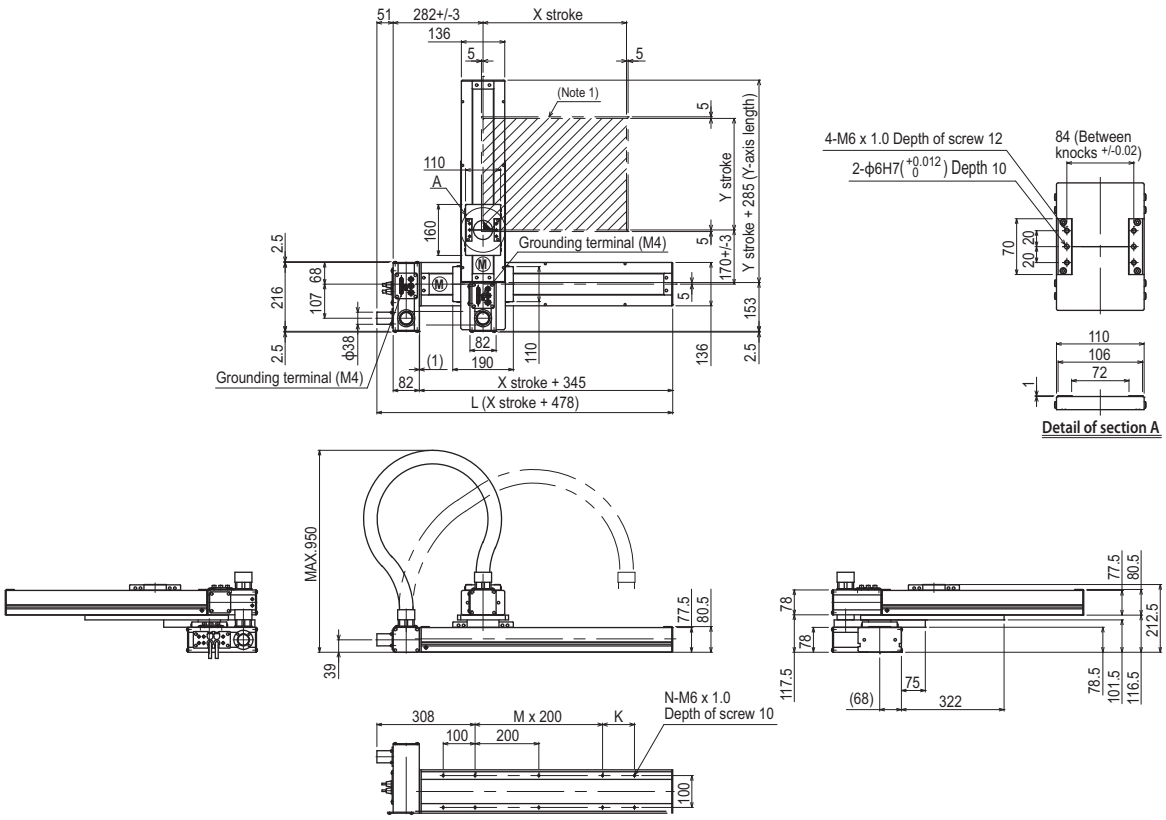

X stroke	150	250	350	450	550	650	750	850	950	1050
L	628	728	828	928	1028	1128	1228	1328	1428	1528
K	200	100	200	100	200	100	200	100	200	100
M	0	1	1	2	2	3	3	4	4	5
N	6	8	8	10	10	12	12	14	14	16

Y stroke	150	250	350	450	550	650
Maximum speed for each stroke (mm/sec) Note 2 — X axis	1000				800	650	550
Maximum speed for each stroke (mm/sec) Note 2 — Speed setting	–				80%	65%	55%

Note 1. The moving range when returning to origin and the stop position when stopping by mechanical stopper.

Note 2. When the X-axis stroke is longer than 850mm, resonance of the ball screw may occur depending on the operation conditions (critical speed). In this case, reduce the speed setting on the program by referring to the maximum speeds shown in the table at the left.

SXYxC 2 axes T3

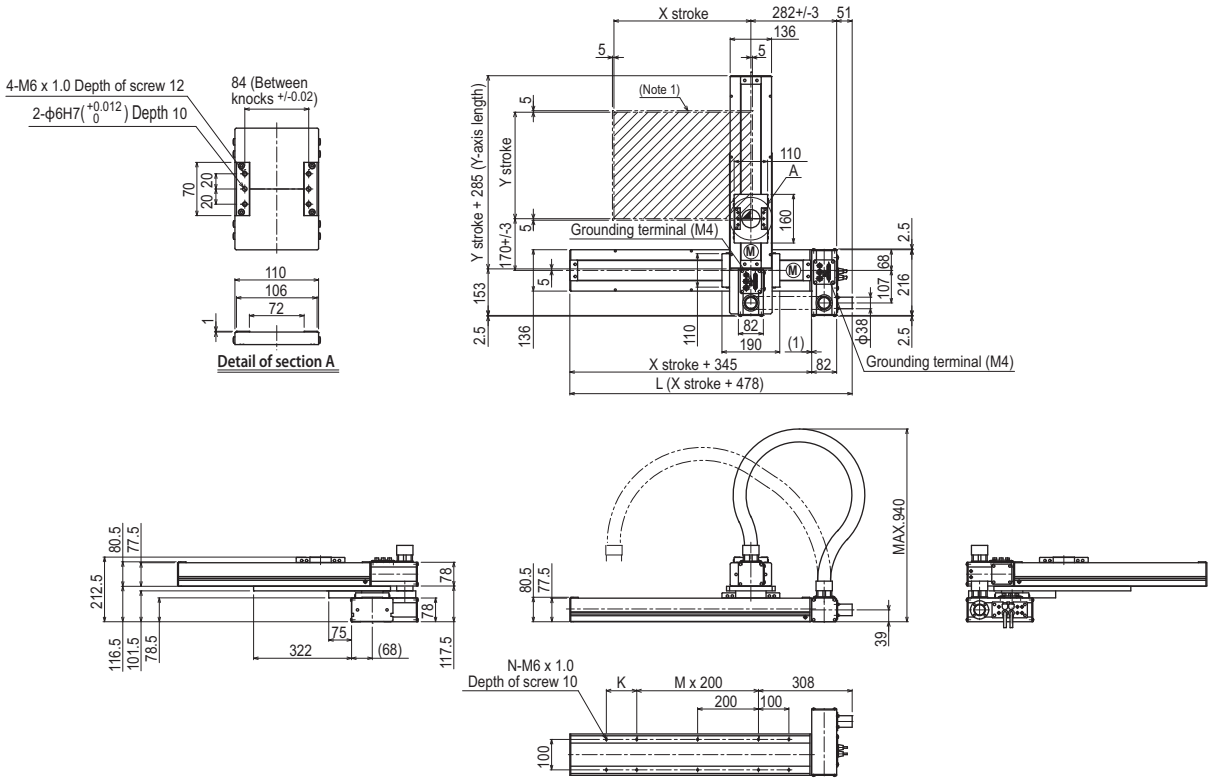

X stroke	150	250	350	450	550	650	750	850	950	1050
L	628	728	828	928	1028	1128	1228	1328	1428	1528
K	200	100	200	100	200	100	200	100	200	100
M	0	1	1	2	2	3	3	4	4	5
N	6	8	8	10	10	12	12	14	14	16

Y stroke	150	250	350	450	550	650

Maximum speed for each stroke (mm/sec) Note 2					
X axis	1000	800	650	550
Speed setting	–	80%	65%	55%

Note 1. The moving range when returning to origin and the stop position when stopping by mechanical stopper.

Note 2. When the X-axis stroke is longer than 850mm, resonance of the ball screw may occur depending on the operation conditions (critical speed). In this case, reduce the speed setting on the program by referring to the maximum speeds shown in the table at the left.