YK700XC

Arm length 700mm Maximum payload 20kg

Ordering method

YK700XC -	[ ] -	[ ] -	RCX240 -	[ ] -	R -	[ ] -	[ ] -	BB
Model	Z axis stroke	Cable length	Controller	Usable for CE	Regenerative unit	Expansion I/O Note 1	Network optuon	Battery
	200: 200mm 400: 400mm	3L: 3.5m (Standard) 5L: 5m 10L: 10m		No entry: Standard E: CE marking	R: RGU-2	N, P: Standard I/O 16/8 N1, P1: 40/24 N2, P2: 64/40 N3, P3: 88/56 N4, P4: 112/72	No entry: None CC: CC-Link DN: DeviceNet PB: Profibus EN: Ethernet YC: YC-Link Note 2	BB: 4 pcs

Note 1. Use N to N4 when NPN is selected on the I/O board, and P to P4 when PNP is selected.
Note 2. Available only for the master.

Basic specifications

		X axis	Y axis	Z axis		R axis
Axis specifications	Arm length (mm)	350	350	200	400	–
	Rotation angle ( )	+/-120	+/-145	–		+/-360
AC servo motor output (W)		800	400	400		200
Repeatability Note 1 (XYZ mm) (R)		+/-0 02		+/-0.01		+/-0.005
Maximum speed (XYZ m/sec) (R /sec)		6.7		1.7		600
Maximum payload (kg)		20				
Standard cycle time with 2kg payload (sec)		0.57				
R-axis tolerable moment of inertia Note 2 (kgm^2)		0.32				
User wiring (sq × wires)		0.2 × 20				
User tubing (Outer diameter)		ϕ6 × 3				
Travel limit		1.Soft limit, 2.Mechanical stopper (X, Y, Z axes)				
Robot cable length (m)		Standard: 3.5 Option: 5, 10				
Weight (kg)		57				
Degree of cleanliness		CLASS 10 Note				
Intake air (Nℓ/min)		60 Note 5				

Note 1. This is the value at a constant ambient temperature. (X,Y axes)
Note 2. There are limits to the setting of the acceleration coefficient.
Note 3. Per 1cf (0.1μm base), when suction blower is used.
Note 4. The necessary intake amount varies depending on the use conditions and environment.

Controller

Controller	Power capacity (VA)	Operation method
RCX240-R	2000	Programming / I/O point trace / Remote command / Operation using RS-232C communication

YK700XC

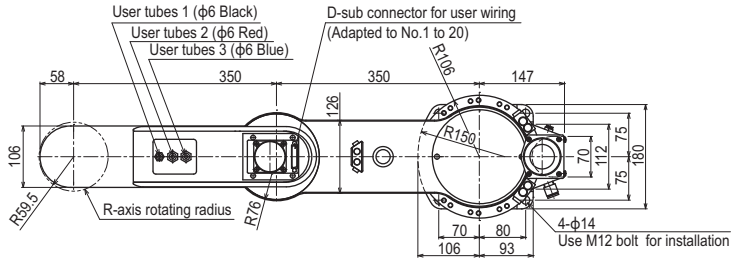

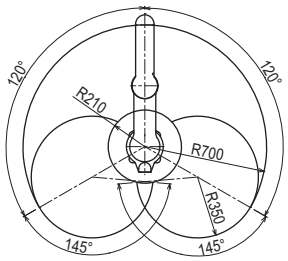

Working envelope

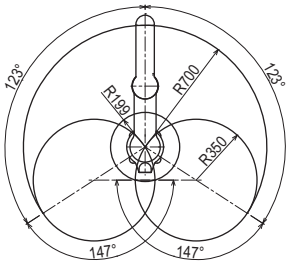
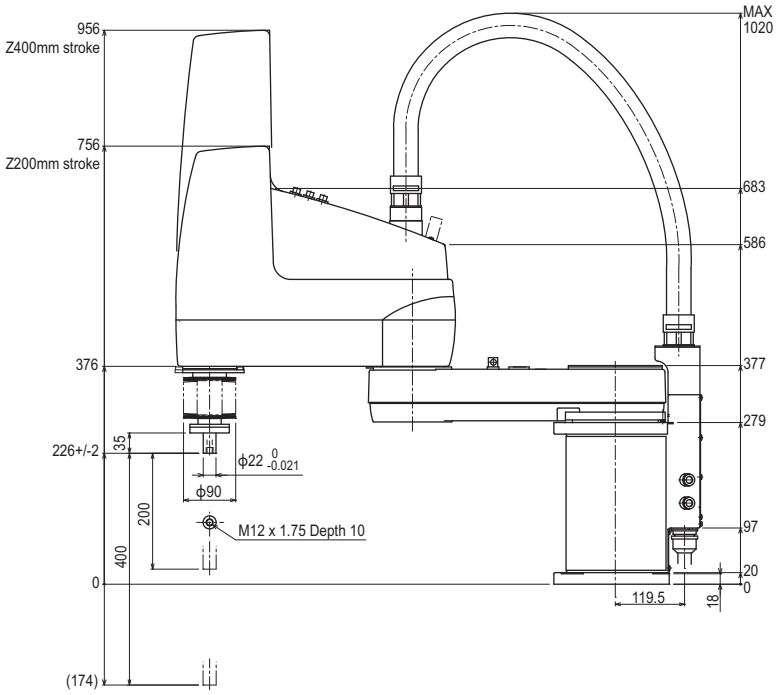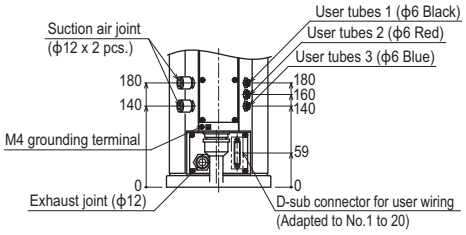
X,Y axis mechanical stopper position