www.keyvalveltd.com

KEYVALVE®

Resilient Seated Butterfly Valve

Fluid Control For Sustainable Future

The Company

KEYVALVE, a name associated with high quality work, creativity and engineering passion. Our business focuses on designing, developing, manufacturing and distribution of premium valves for fluid control industry.

With over 30 years of experience in technical know-how for valves manufacturing, our production with test facilities has been certified to PED 97/23/EC Module H and ISO 9001:2008 by TÜV Rheinland Germany. We impose the strictest quality control at every stage of manufacturing to assure product functionality and reliability.

Quality Policy

ISO9001:2008 CE 0035

Certificate

Quality-Assurance System

acc. to Directive 97/23/EC

Certificate no.: 01 202 CH/IQ-12 0485

Name and address of the manufacturer: KEYVALVE (SHENZHEN) CO., LTD. 1F, Building M, No.2, North of Shangxue Science and Technology Industrial City, Kuesiang Community, Bantian Street, Longgang District, Shenzhen City, Guangdong Province, P. R. China

Herewith we certify that the above mentioned manufacturer operates a quality system according to the European Directive 97/23/EC. The manufacturer has the permission to affix the following CE marking to pressure equipment described and manufactured in accordance to the scope covered by this Quality Assurance System.

CE 0035

Tested acc. to Directive 97/23/EC: QS-System (Module H)

Audit report no.: CH/IQ 12 0485

Area of validity: Design and Manufacturing of Industrial Valves, see annex to certificate

Manufacturing plant: KEYVALVE (SHENZHEN) CO., LTD. 1F, Building M, No.2, North of Shangxue Science and Technology Industrial City, Kuesiang Community, Bantian Street, Longgang District, Shenzhen City, Guangdong Province, P. R. China

Valid until: April 10, 2015

Cologne, April 11, 2012 Dr.-Ing. W. Wichert

TÜVRheinland® Precisely Right.

Certificate

Standard: ISO 9001:2008

Certificate Regist. No.: 01 100 126552

TÜV Rheinland Cert GmbH certifies

Certificate Holder: KEYVALVE (SHENZHEN) CO., LTD. 1F, Building M, No. 2, North of Shangxue Science and Technology Industrial City, Kuesiang Community, Bantian Street, Longgang District, Shenzhen, Guangdong Province 518129, P. R. China

Scope: Design and Manufacture of Industrial Valves

An audit was performed, Report No. 126552. Proof has been furnished that the requirements according to ISO 9001:2008 are fulfilled. The due date for all future audits is 21-03 (dd.mm).

Validity: The certificate is valid from 2012-07-12 until 2018-08-21. First certification 2012

2012-07-12

TÜV Rheinland Cert GmbH Am Grauen Stein · 51105 Köln

IAF

DQS-ZM-08-08-02

TÜVRheinland® Precisely Right.

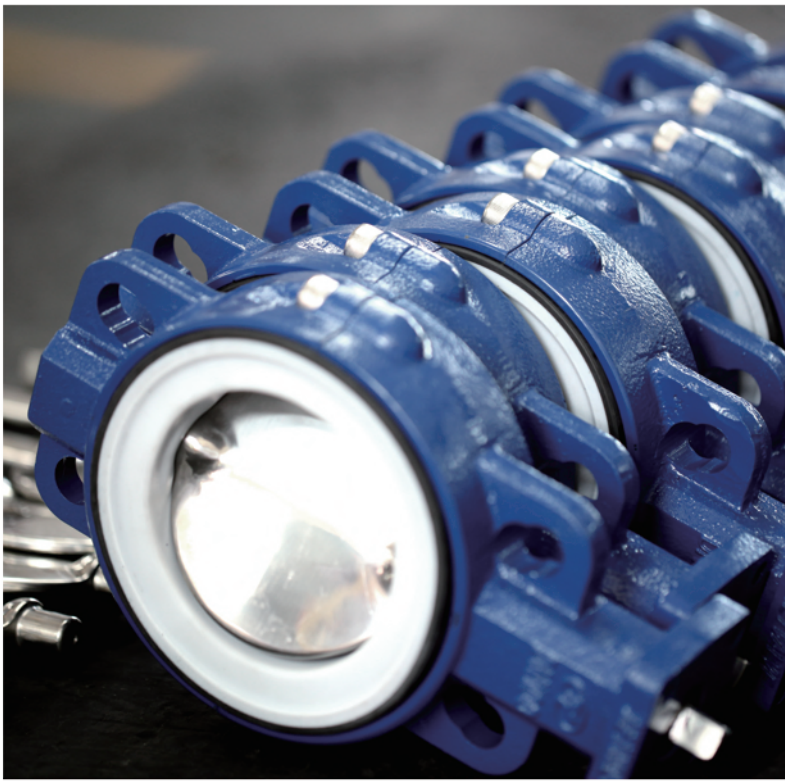

KV-98 Series

Excellent corrosion resistance | High temperature and wear resistance

Optimum flow rate | Bubble tight shut-off | Easy to install

KV-98

Applications

KV-98 resilient seated butterfly valve is built for excellent corrosion and high temperature resistance applications. The valve is commonly used in industries worldwide including:
Textile dyeing machinery, petrochemical, food and beverage, municipal water supply, wastewater treatment, pulp and paper, oil and gas, oleochemical, palm oil refinery and chemistry lab.

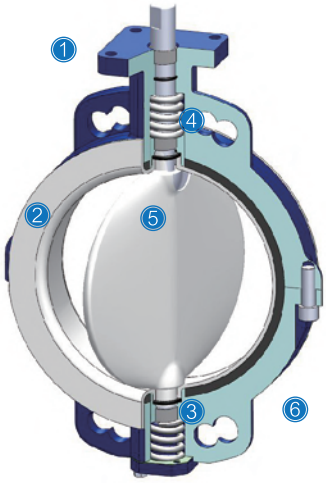

① Actuator mounting flange

- Accommodates all types of actuators as per ISO 5211.

② PTFE-lined seat

- Body equipped with PTFE-lined seat to provide excellent corrosion and temperature resistance, isolate line media completely from contact with the shaft and valve body.
- PTFE with elastomer insert of Silicon / Viton, increases the sealing efficiency and prolong lifespan of PTFE.
- Replaceable seat design allows economical and convenient replacement in the field.

③ Bearing

- Dry type, heavy duty upper and lower bearings provide strong shaft support and prevent wear and tear during long hours of operation.

④ Maintenance free shaft sealing

- Upper and lower part of the disc equipped with auto-compensated spring and shaft packing, provide tight sealing under high frequency operation.
- Built-in three layers of sealing in shaft packing:
  1st layer: Shaft entry sealing PTFE-lined, Silicon / Viton insert.
  2nd layer: Silicon / Viton O-ring.
  3rd layer: Upper shaft Silicon / Viton O-ring.

⑤ One piece integrated disc and shaft

- The thin disc profile (hand polished disc edge and surface) integrated shaft and disc, provide high flow rate (Kv value) , bubble tight shut-off at minimum torque, reliable positioning, excellent flow characteristic and wear reduction.
- Disc covered with PFA or other composite materials as optional.

⑥ Short face to face dimension

- Allows easy installation and only minimum space is required.

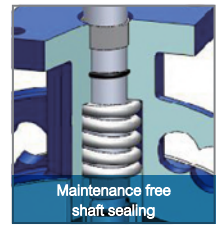

Maintenance free shaft sealing

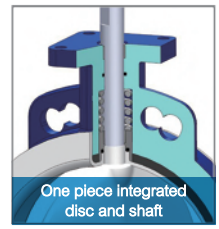

One piece integrated disc and shaft

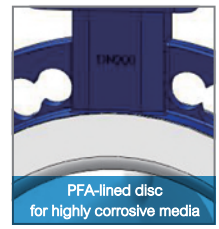

PFA-lined disc for highly corrosive media

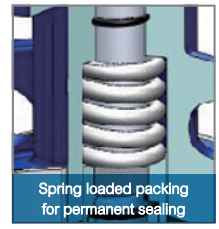

Spring loaded packing for permanent sealing

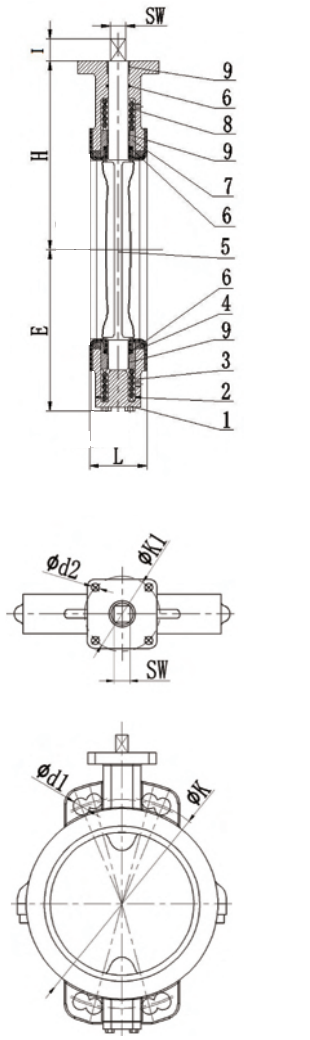

Technical data

Nominal diameter	DN40 - DN500
Nominal pressure	1.0 MPa - 1.6 MPa
Connection	Wafer
Flange standard	GB, DIN, ASME, JIS
Mode of operation	Notch lever / Worm gear
	Electric actuator / Pneumatic actuator

Sealing leakage test EN 12266-1 leakage rate A

No.	Part	Material
1	End cover	SAE1045
2	Gasket	GP300G
3	Body	GGG-40.3 / EN-GJS-400-18
4	Seat	PTFE-lined, Silicon insert -60 ℃ to 210 ℃
		PTFE-lined, Viton insert -20 ℃ to 200 ℃
5	Disc & shaft	Polished SA351CF8M, disc coated with PFA as optional
6	O-ring	Silicon / Viton
7	Bush	SA351CF8
8	Spring	A182 F304
9	Bearing	SA351CF8 + PTFE

Overall Dimensions（mm）

DN		40	50	65	80	100	125	150	200	250	300	350	400	450	500
L		33	41	44	44	51	54	54	64	64	76	76	102	108	127
H		110	125	125	142	152	164	175	210	240	269	310	385	410	445
E		44	50	58	89	104	118	131	167	195	230	268	300	318	350
I		13	15	15	15	18	18	23	23	28	28	38	38	48	48
SW		11	11	11	11	12	14	14	17	22	22	27	27	36	36
nxΦd2		4x7	4x7	4x7	4x9	4x9	4x11	4x11	4x11	4x13	4x13	4x17.5	4x17.5	4x21.5	4x21.5
ΦK1		50	50	50	70	70	102	102	102	125	125	140	140	165	165
ASME	ΦK	110	120.7	139.7	152.4	190.5	215.9	241.3	294.5	362	431.8	476.3	539.8	577.9	635
	nxΦd1	4x18	4x18	4x18	4x18	8x18	8x22	8x22	8x22	12x22	12x26	12x30	16x28	20x32	20x32
	Thread	M16	M16	M16	M16	M16	M20	M20	M20	M20	M24	M27	M24	M27	M27
JIS	ΦK	105	120	140	150	175	210	240	290	350	400	445	510	565	620
	nxΦd1	4x18	4x18	4x18	8x18	8x18	8x22	8x22	8x22	12x22	12x22	12x22	16x27	20x27	20x27
	Thread	M16	M16	M16	M16	M16	M20	M20	M20	M20	M20	M20	M24	M24	M24
GB/DIN	ΦK	98.5	125	145	160	180	210	240	295	350	400	460	515	565	620
	nxΦd1	4x18	4x18	4x18	8x18	8x18	8x22	8x22	8x22	12x22	12x22	12x22	16x27	20x27	20x27
	Thread	M16	M16	M16	M16	M16	M20	M20	M20	M20	M20	M20	M24	M24	M24
Max. torque（Nm）		26	28	33	50	72	100	150	247	368	550	792	1155	1430	1760
Kvs value（m^3/h）		260	302	405	545	882	1382	1813	3188	5182	7603	8568	10694	14114	16994
Weight (kg)		2	2.2	2.6	3	4.1	5.4	6.7	11.6	16.2	26.8	33.2	48.4	72	87.2

KV-68 / KV-88 Series

Mild corrosion resistance Mild temperature and wear resistance

High flow rate Bubble tight shut-off Easy to install

Applications

KV-68 / KV-88 resilient seated butterfly valve is built for mild corrosion and mild temperature resistance applications. The valve is commonly used in industries worldwide including: Textile dyeing machinery, petrochemical, food and beverage, municipal water supply, wastewater treatment, pulp and paper, oil and gas, oleochemical, palm oil refinery and chemistry lab.

KV-68

KV-88

KV-68

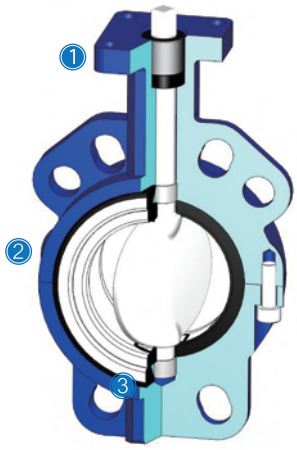

① Actuator mounting flange

- Accommodates all types of actuators as per ISO 5211.

② Short face to face dimension

- Allows easy installation and only minimum space is required.

③ Gasket-free connection

- Wafer soft seat without gasket makes installation quick and easy.

④ Bearing

- Dry type, heavy duty upper and lower bearings provide strong shaft support and prevent wear and tear during long hours of operation.

⑤ One piece integrated disc and shaft

- The thin disc profile (hand polished disc edge and surface) with integrated shaft and disc, provide high flow rate (Kv value), bubble tight shut-off at minimum torque, reliable positioning, excellent flow characteristic and wear reduction.

⑥ PTFE-lined EPDM seat

- Made of highly engineered composite materials which is suitable for mild corrosion and mild temperature resistance.
  It provides complete isolation of line media from contact with the shaft and valve body.
- Replaceable seat design allows economical and convenient replacement in the field.

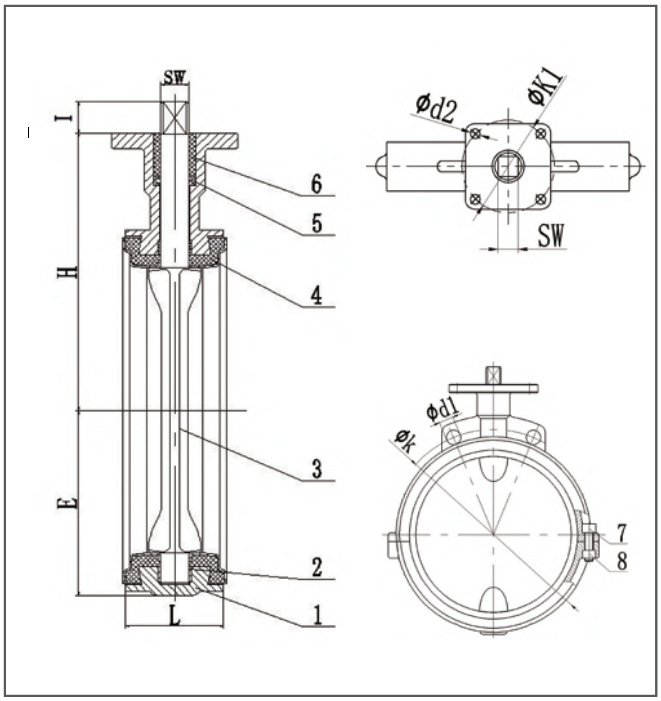

Technical data		
Model	KV - 68	KV - 88
Nominal diameter	DN40 - DN500	DN50 - DN300
Nominal pressure	1.0 MPa - 1.6 MPa	
Connection	Wafer	
Flange standard	GB, DIN, ASME, JIS	GB, DIN
Mode of operation	Notch lever / Worm gear Electric actuator / Pneumatic actuator	

Sealing leakage test EN 12266-1 leakage rate A			
No.	Part	Material	
1	Body	GGG-40.3 / EN-GJS-400-18	SA351CF8
2	Bearing	SA351CF8 + PTFE	
3	Disc & shaft	Polished SA351CF8M	Disc coated with PFA as optional
4	Seat	PTFE lined EPDM -20 ℃ to 150 ℃	
5	O-ring	Silicon / PTFE	
6	Bush	PTFE + Graphite	
7	Bolt	ASTM A193 / A94M B8	
8	Nut	ASTM A194 / A94M B8	

Overall Dimensions（mm）

DN			40	50	65	80	100	125	150	200	250	300	350	400	450	500
L		KV-68	33	41	44	44	51	54	54	64	64	76	76	102	108	127
		KV-88		41	44	47	57.5	61	61	76	77	87				
H		KV-68	110	125	125	142	152	164	175	210	240	269	310	385	410	445
		KV-88		125	125	142	152	163	174	211	240	265				
E		KV-68	44	50	58	89	104	118	131	167	195	230	268	300	318	350
		KV-88		50	64	74	84	100	112	140	170	202				
I		KV-68	13	15	15	15	18	18	23	23	28	28	38	38	48	48
		KV-88		16	16	16	19	19	24	24	29	29				
SW		KV-68	11	11	11	11	12	14	14	17	22	22	27	27	36	36
		KV-88		11	11	11	12	17	17	17	22	27				
ΦK1		KV-68	50	50	50	70	70	102	102	102	125	125	140	140	165	165
		KV-88		50	50	70	70	102	102	102	125	125				
nxΦd2		KV-68	4x7	4x7	4x7	4x9	4x9	4x11	4x11	4x11	4x13	4x13	4x17.5	4x17.5	4x21.5	4x21.5
		KV-88		4x6.5	4x6.5	4x9	4x9	4x11	4x11	4x11	4x13	4x13				
ASME	ΦK	KV-68	110	120.7	139.7	152.4	190.5	216	241	294.5	362	431.8	476.3	539.8	577.9	635
	nxΦd1	KV-68	4x18	4x18	4x18	4x18	8x18	8x22	8x22	8x22	12x22	12x26	12x30	16x28	20x32	20x32
	Thread	KV-68	M16	M16	M16	M16	M16	M20	M20	M20	M20	M24	M27	M24	M27	M27
JIS	ΦK	KV-68	105	120	140	150	175	210	240	290	350	400	445	510	565	620
	nxΦd1	KV-68	4x18	4x18	4x18	8x18	8x18	8x22	8x22	8x22	12x22	12x22	12x22	16x27	20x27	20x27
	Thread	KV-68	M16	M16	M16	M16	M16	M20	M20	M20	M20	M20	M20	M24	M24	M24
GB & DIN	ΦK	KV-68	98.5	125	145	160	180	210	240	295	350	400	460	515	565	620
		KV-88		125	145	160	180	210	240	295	350	400				
	nxΦd1	KV-68	4x18	4x18	4x18	8x18	8x18	8x18	8x22	8x22	12x22	12x22	12x22	16x27	20x27	20x27
		KV-88		4x18	4x18	8x18	8x18	8x18	8x22	8x22	12x22	12x22				
	Thread	KV-68	M16	M16	M16	M16	M16	M16	M20	M20	M20	M20	M20	M24	M24	M24
		KV-88		M16	M16	M16	M16	M16	M20	M20	M20	M20				
Max. torque (Nm)		KV-68	26	28	32.2	48	71	100	150	253	380	540	782	1047	1392	1794
		KV-88		28	32.2	48	71	100	150	253	380	540	782	1047	1392	1794
Kvs value (m^3/h)		KV-68	260	335	450	605	980	1535	2014	3542	5758	8448	9520	11882	15682	18882
		KV-88		335	575	820	1134	1761	2418	4133	5934	8600				
Weight (kg)		KV-68	2	2.8	3.3	3.8	5.1	6.8	8.4	14.5	20.2	33.5	41.5	60.5	90	109
		KV-88		2.2	2.5	3	3.8	6.7	8	13.5	18.6	30				

Resilient Seated Butterfly Valve

Pressure-temperature Compliance

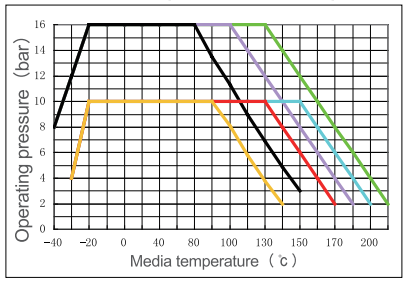

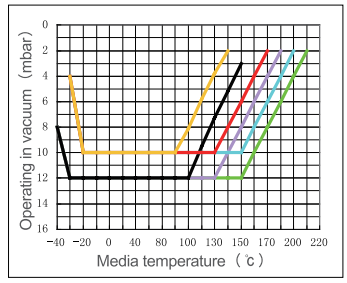

- DN40 - DN300 PTFE-lined EPDM
- DN350 - DN500 PTFE-lined EPDM
- DN40 - DN300 PTFE-lined, Viton insert
- DN350 - DN500 PTFE-lined, Viton insert
- DN40 - DN300 PTFE-lined, Silicon insert
- DN350 - DN500 PTFE-lined, Silicon insert

Kv Value

	Kv value（m^3/h）with stainless steel disc								
	DN (mm) \ Opening angle α°	20	30	40	50	60	70	80	90
KV-98	40	61	93	151	180	214	220	246	272
	50	68	103	168	200	238	244	273	302
	65	92	139	225	268	319	327	366	405
	80	124	187	303	361	429	440	492	545
	100	200	302	490	584	694	711	797	882
	125	313	474	767	914	1088	1115	1248	1382
	150	411	621	1007	1200	1427	1462	1638	1813
	200	723	1092	1770	2109	2510	2572	2880	3188
	250	1175	1776	2878	3429	4080	4180	4681	5182
	300	1723	2605	4222	5031	5986	6133	6868	7603
	350	1942	2936	4758	5669	6746	6912	7740	8568
	400	2424	3664	5939	7076	8420	8626	9660	10694
	450	3199	4836	7838	9339	11112	11385	12750	14114
	500	3852	5823	9437	11244	13380	13708	15351	16994

	Kv value（m^3/h）with stainless steel disc								
	DN (mm) \ Opening angle α°	20	30	40	50	60	70	80	90
KV-88	50	76	115	186	222	264	290	303	335
	65	130	197	319	380	453	497	519	575
	80	186	281	455	543	646	709	741	820
	100	257	389	630	750	893	981	1024	1134
	125	399	603	978	1165	1386	1523	1591	1761
	150	548	829	1343	1600	1904	2091	2184	2418
	200	937	1416	2295	2735	3254	3334	3733	4133
	250	1345	2033	3295	3926	4672	4787	5360	5934
	300	1949	2947	4776	5690	6771	6937	7769	8600

	Kv value（m^3/h）with stainless steel disc								
	DN (mm) \ Opening angle α°	20	30	40	50	60	70	80	90
KV-68	40	68	104	167	200	238	243	273	302
	50	76	115	186	222	264	270	303	335
	65	102	154	250	298	354	363	407	450
	80	137	207	336	400	476	488	547	605
	100	222	336	544	648	772	791	885	980
	125	348	526	852	1016	1209	1238	1387	1535
	150	457	690	1118	1333	1586	1625	1819	2014
	200	803	1214	1967	2344	2789	2857	3200	3542
	250	1303	1973	3198	3810	4533	4645	5201	5758
	300	1915	2895	4691	5590	6651	6815	7631	8448
	350	2158	3262	5287	6299	7495	7679	8600	9520
	400	2693	4072	6598	7862	9355	9585	10733	11882
	450	3555	5374	8709	10376	10376	12650	14166	15682
	500	4280	6470	10486	12494	12494	15231	17057	18882

The Kv value (m^3/h) is the flow of water at temperature of 5℃ to 30℃, delta P of 1 bar. Please contact our engineers for further information.
The throttling function is approximately linear in flow characteristic at an angle from 30° to 90°.

Local Representative:

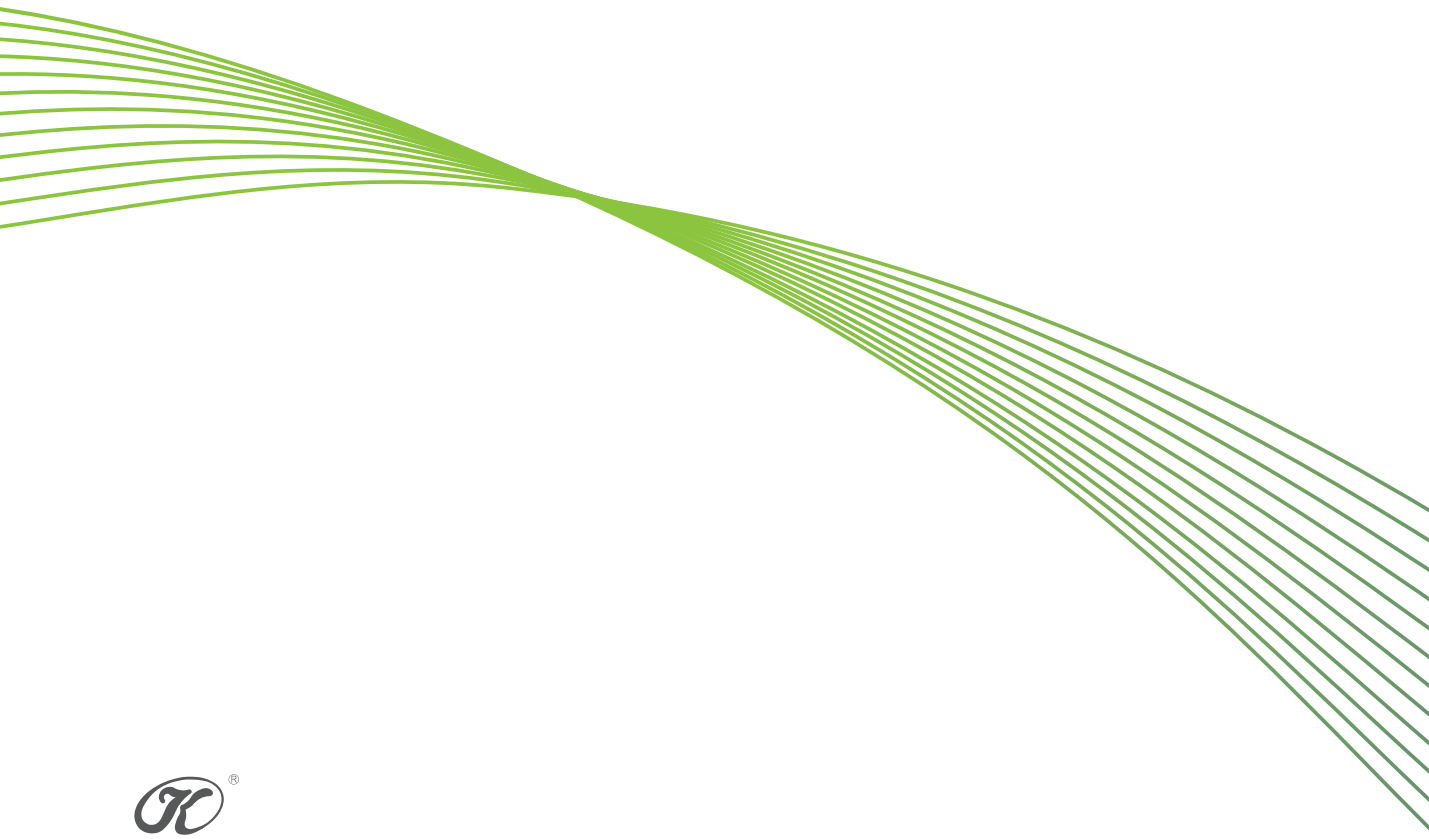

KEYVALVE

Keyvalve Co., Ltd.
7/F., 22-28 Cheung Tat Road, Tsing Yi, Hong Kong.
Tel : 852-2892 8878
Fax : 852-8161 0688
Email : enquiry@keyvalveltd.com

© Keyvalve Co., Ltd.
Edition EN / 05 / 15 - Keyvalve Co., Ltd reserves the right for final confirmation in case of any change of product design and specification.