SHRIDHAN®

Automate your Field

# SIGHT LEVEL GAUGES

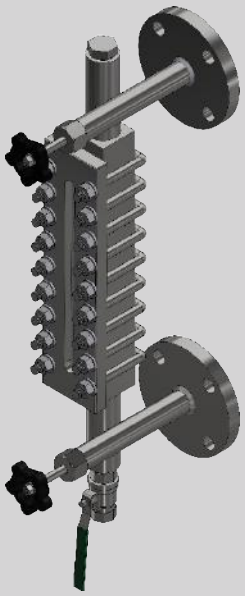

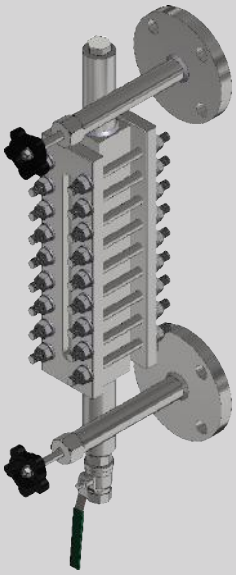

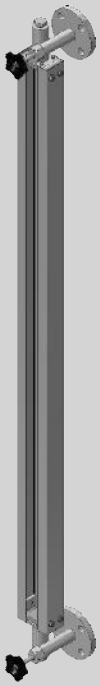

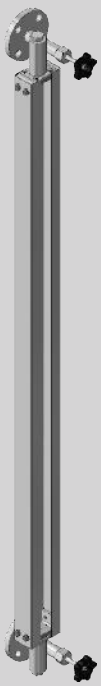

# Index

1.0 GLASS LEVEL GAUGES-GLG SERIES ...01
1.1 WORKING PRINCIPLE: ...02
1.2 APPLICATIONS ..02
1.3 ORDERING INFORMATION FOR GLASS LEVEL GAUGES ...03
2 SIGHT LEVEL INDICATOR - SLI SERIES ...04
2.1 CONSTRUCTION AND OPERATION ...04
2.2 ORDERING INFORMATION FOR SIGHT LEVEL INDICATOR ...05
3 DRUM SCALE LIQUID LEVEL INDICATOR (FOR DRUMS & BARRELS) - DSI SERIES ...17
3.1 CONSTRUCTION ...17
3.2 OPERATION ...17
3.3 TECHNICAL SPECIFICATIONS ...18
3.4 HOW TO USE ...18
3.5 LIMITATIONS ...18

# 1.0 GLASS LEVEL GAUGES-GLG SERIES

Glass level gauges gives visual indication of liquid level operating in a process. These are one of the oldest & reliable techniques for liquid level indication.

Based on the principle of operation, 3 models are available,

1. Transparent Level Gauge-TRLG
2. Reflex level Gauge-RLG
3. Tubular Level Gauge-TLG

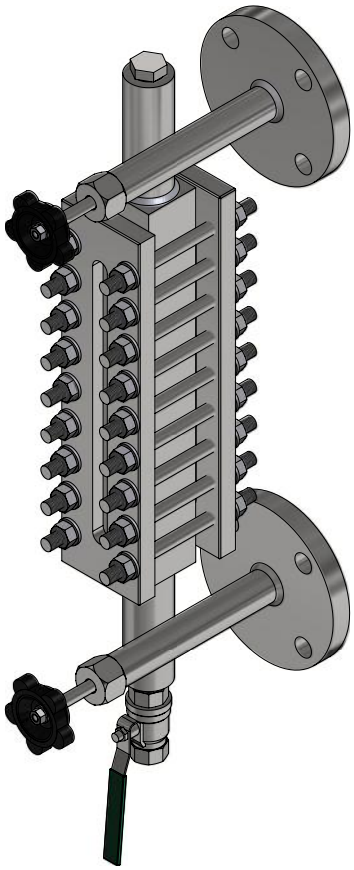

**Transparent Level Gauge-TRLG**

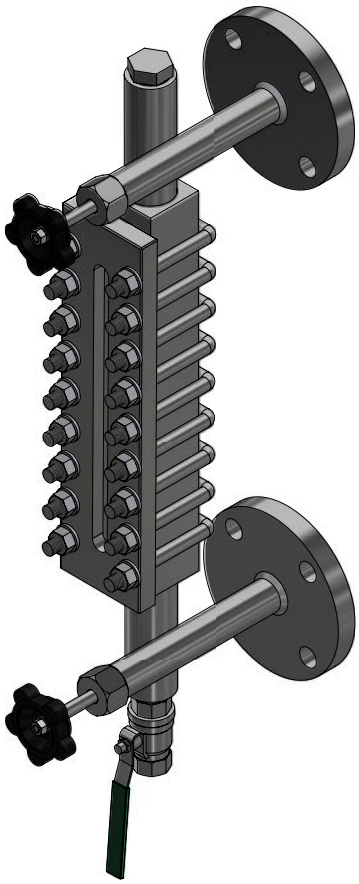

**Reflex Level Gauge-RLG**

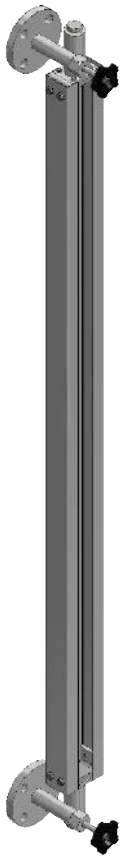

**Tubular Level Gauge-TLG**

## Specifications:

| | | |
|---|---|---|
| **Material of construction** | : | CS (ASTM A-105), SS316, SS316L, PTFE |
| **Gauge glass** | : | Toughened glass, Borosilicate (For tubular gauges only) |
| **Gasket** | : | Silicon, PTFE, Grafoil |
| **Maximum Pressure** | : | Transparent, Reflex level gauge - 200 Kg/cm$^2$<br>Tubular level gauge-2 Kg/cm$^2$ |
| **Maximum Temperature** | : | Transparent, Reflex level gauge- 250 °C<br>Tubular level gauge-50°C |
| **Mounting** | : | Top-Bottom, Side-side |
| **Process Connection** | : | Flanged with various Standards, Threaded (NPT/BSP) |
| **Calibrated Scale** | : | SS304 |
| **Additional Accessories** | : | Auto shut off, LED Illuminator, Frost free extension, Steam Jacketing |

## 1.1 WORKING PRINCIPLE:

### Transparent Level Gauge:

Transparent Level gauges employ two transparent glasses fitted with a liquid chamber on either side. The liquid level is indicated as a result of the difference in the transparency of two media. These are designed for High pressure & High Temperature applications.

### Reflex Level Gauge:

The working principle is based on the difference in the refractive indices of liquid &vapor. Light rays entering the gauge is absorbed by the liquid and reflected bac to the observer direction in the vapor space region. Thus creating a silvery region in vapors.

### Tubular Level Gauge:

Tubular level gauges allows direct visual reading of the liquid. This can be used for low pressure & temperature applications.

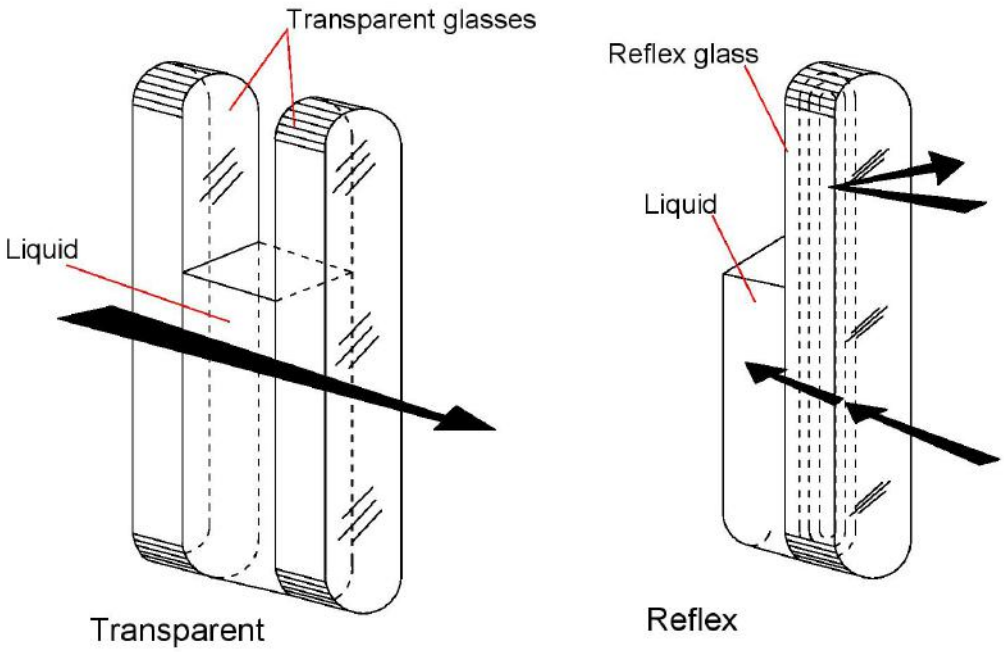


## 1.2 APPLICATIONS

**Transparent & Reflex Level Gauges are suitable for industrial and commercial applications including:**

- Chemical and petrochemical industries
- Energy and power plant technology
- Feed water heaters or boilers
- Oil and gas industries
- Offshore exploration and drilling
- Pipeline compressor applications
- Pulp and paper
- Food and beverage
- Gas Plants
- Pharmaceutical

## 1.3 ORDERING INFORMATION FOR GLASS LEVEL GAUGES

**SPECIFY PART NO.** → **GLG** 1 2 3 4 5 6 7 8

**GLG** ☐ ☐ ☐ ☐ ☐ ☐ ☐ ☐

### 1. Type

A.Transparent
B. Reflex
C. Tubular

### 2. Material of Construction

1.Carbon Steel A-105
2. SS316
3. SS316L
4. PTFE
O.Others

### 3. Process Connection

| | |
|---|---|
| **Flanged** | |
| 1. ½ " | A. # 150 |
| 2. ¾" | B. # 300 |
| 3. 1" | C. # 600 |
| 4. 1 ½" | D.#900 |
| 5. Others | O.Others |
| **Threaded** | |
| 6. ½" | E. BSP |
| 7. ¾' | F. NPT |
| 8. 1" | O. Others |
| 9. 1 ½" | |
| 10. Others | |

### 4. Gauge glass

A. Toughened
B. Borosilicate (For Tubular only)
O. Others

### 5. Mounting Position

S. Side – Side
T. Top-Bottom
O. Others

### 6. Vent Options

| | |
|---|---|
| 1. ½ " | A. RF Flange |
| 2. ¾' | B. RTJ Flange |
| 3. 1' | C. NPT Thread |
| 4. 1 ½" | D. BSP Thread |
| O. Others | E. Others |

**Note: Ratings would be same as process connection**

### 7. Drain Options

| | |
|---|---|
| 5. ½ " | F. RF Flange |
| 6. ¾' | G. RTJ Flange |
| 7. 1' | H. NPT Thread |
| 8. 1 ½" | I. BSP Thread |
| O. Others | J. Others |

**Note: Ratings would be same as process connection**

### 8. Accessories

N. Not Applicable
A. Auto shut off valve
B. LED Illuminator
C. Soft free extension
D. Steam Jacketing

# 4 SIGHT LEVEL INDICATOR - SLI

**A COST EFFECTIVE SOULTION FOR LEVEL INDICATION & SENSING VARIOUS PROCESS APPLICATIONS.**
Mechanical sight level indicator is the best known device for a low cost, still effective and convenient way for monitoring and sensing of liquid level in various process applications.

## 4.1 CONSTRUCTION AND OPERATION

The tough, transparent, acrylic tube of the level indicator assembly provides easy and effective visibility of the liquid level inside the tank through the guide tube with a pointer which moves inside the tube, indicating a continuous change in the rise or fall of liquid level.

Further provision is also made to mount the filler breather assembly to the same mounting flange of the indicator. Still further, to obtain single or two level switching output, suitable reed proximity switches or inductive proximity switches are clamped to the side of the cage with necessary brackets, also suitable to adjust the levels for sensing to the convenience of the customer at site in order to take out the signal from the sensor, depending upon the required level of the liquid for various switching operations like alarm, pump operation, solenoid operation, PLC input etc.,

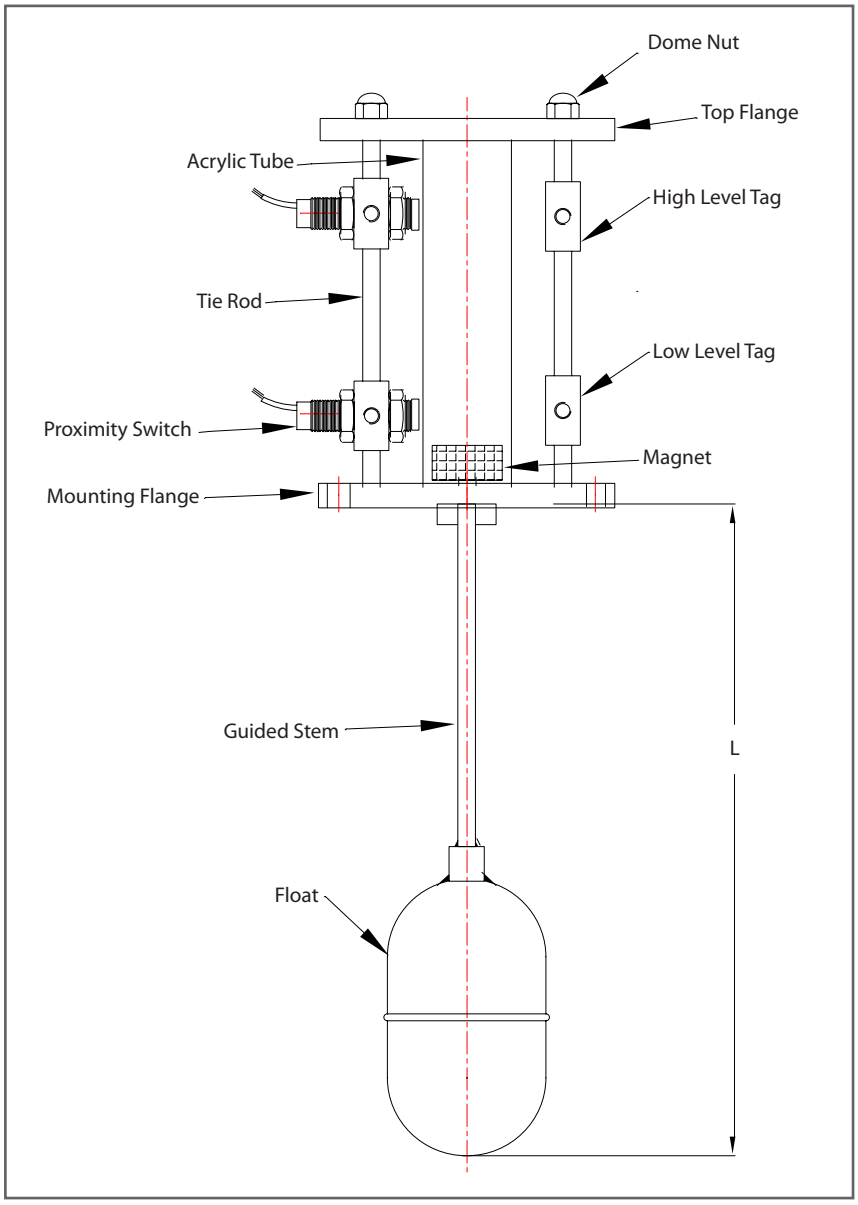

## 4.2 ORDERING INFORMATION FOR SIGHT LEVEL INDICATOR

| | | | | | |
|---|---|---|---|---|---|
| **SPECIFY PART NO.** → | **SLI** | **1** | **2** | **3** | **4** |
| **Example** | **SLI** | 1 | 3 | N | 2 |
| | **SLI** | | | | |

### 1 FLANGE

1. 85 x 85 Square flange 105 PCD
2. Ø 75 x 65 PCD
3. 95 x 55 Rectangular
4. With Breather Assembly

O. Others

### 2 FLOAT SIZE X MOC

1. Ø 45 x SS304
2. Ø 57 x SS304
3. Ø 89 x SS304

O: Others

### 3 SWITCHING CONTACT TYPE

N. Not Applicable

1. Reed proxmity for SPST Switching (125V AC/200V DC/ 0.5A & 15VA)
2. Reed proxmity for SPDT Switching (28V AC/DC/0.25A & 3VA)
3. Inductive Proxmity Sensor

O. Others

### 4 ADDITIONAL ACCESSORIES

N. Not Applicable

1. Temperature Sensor PT100 type.
2. Temperature Sensor + Indicator
3. M12 Pin type cable for Inductive Proximity (optional)

O. Others

## ADDITIONAL ACCESSORIES

**Inductive proximity sensor with cable**

**Temperature Indicator with PT100 sensor**

**Sight Level Indicator with breather assembly**

| Type | SLI-1-1-N-N |
|---|---|
| Material Type | 304/316/316L / MS |
| Mounting Flange | 85 X 85 Sq. Flange |
| Float Size | ⌀45 mm |
| Float Material | 304/316/316L |
| Switching Contact Type | Not Applicable |
| Temperature | 60°C |
| Additional Accessories | Not Applicable |
| Mouting Position | Vertical |

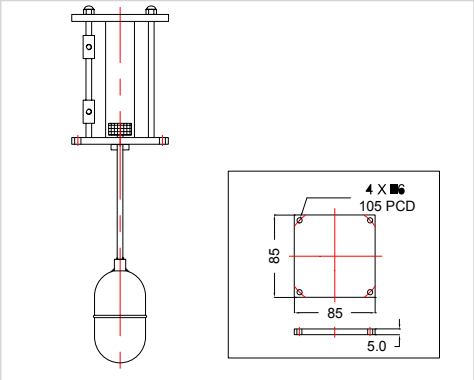


| Type | SLI-1-1-3-N |
|---|---|
| Material Type | 304/316/316L / MS |
| Mounting Flange | 85 X 85 Sq. Flange |
| Float Size | ⌀45 mm |
| Float Material | 304/316/316L |
| Switching Contact Type | Single Inductive Proximity Sensor |
| Temperature | 60°C |
| Additional Accessories | Not Applicable |
| Mouting Position | Vertical |

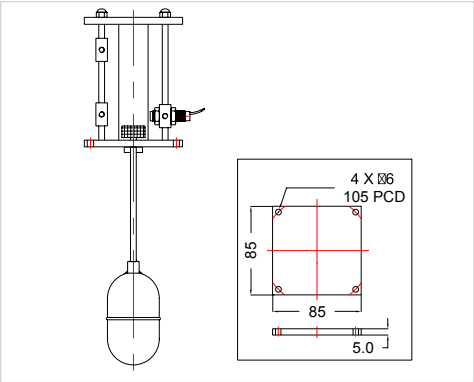


| Type | SLI-1-1-3-N |
|---|---|
| Material Type | 304/316/316L / MS |
| Mounting Flange | 85 X 85 Sq. Flange |
| Float Size | ⌀45 mm |
| Float Material | 304/316/316L |
| Switching Contact Type | Dual Inductive Proximity Sensor |
| Temperature | 60°C |
| Additional Accessories | Not Applicable |
| Mouting Position | Vertical |

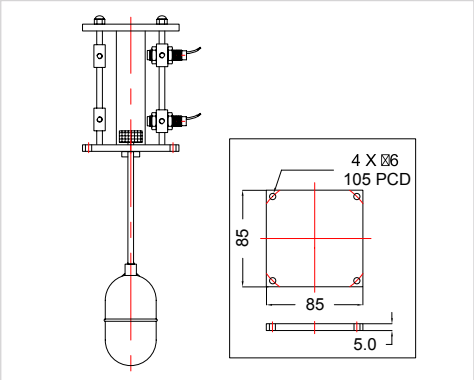


| Type | SLI-1-1-1-N |
|---|---|
| Material Type | 304/316/316L / MS |
| Mounting Flange | 85 X 85 Sq. Flange |
| Float Size | ⌀45 mm |
| Float Material | 304/316/316L |
| Switching Contact Type | Single Reed Proximity Sensor<br>(SPST 125 V AC / 200 V DC / 0.5A & 15 VA)<br>(SPDT 28V AC/DC / 0.25 A & 3A ) |
| Temperature | 60°C |
| Additional Accessories | Not Applicable |
| Mouting Position | Vertical |

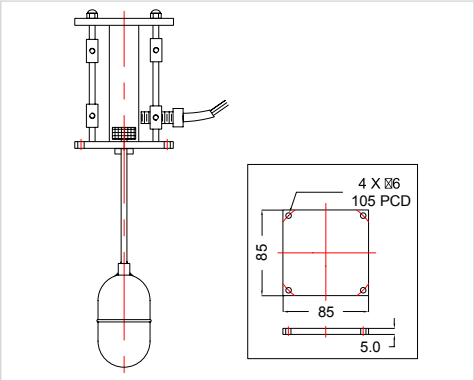


| Type | SLI-1-1-1-N |
|---|---|
| Material Type | 304/316/316L / MS |
| Mounting Flange | 85 X 85 Sq. Flange |
| Float Size | ⌀45 mm |
| Float Material | 304/316/316L |
| Contact Type | SPDT or SPST |
| Switching Contact Type | Double Reed Proximity Sensor<br>(SPST 125 V AC / 200 V DC / 0.5A & 15 VA)<br>(SPDT 28V AC/DC / 0.25 A & 3A ) |
| Temperature | 60°C |
| Additional Accessories | Not Applicable |
| Mouting Position | Vertical |

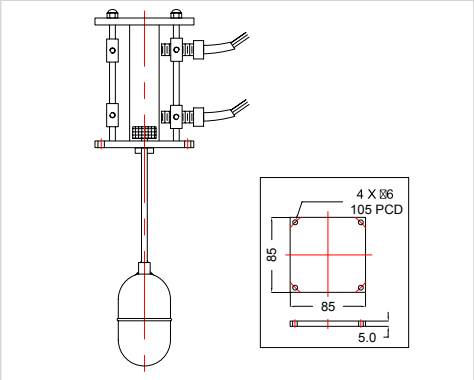

| Type | SLI-3-1-N-N |
|---|---|
| Material Type | 304/316/316L / MS |
| Mounting Flange | 95 X 55 Rectangular Flange |
| Float Size | ⌀45 mm |
| Float Material | 304/316/316L |
| Switching Contact Type | Not Applicable |
| Temperature | 60°C |
| Additional Accessories | Not Applicable |
| Mouting Position | Vertical |

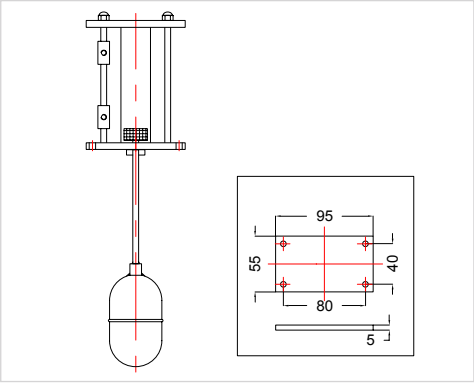


| Type | SLI-3-1-3-N |
|---|---|
| Material Type | 304/316/316L / MS |
| Mounting Flange | 95 X 55 Rectangular Flange |
| Float Size | ⌀45 mm |
| Float Material | 304/316/316L |
| Switching Contact Type | Single Inductive Proximity Sensor |
| Temperature | 60°C |
| Additional Accessories | Not Applicable |
| Mouting Position | Vertical |

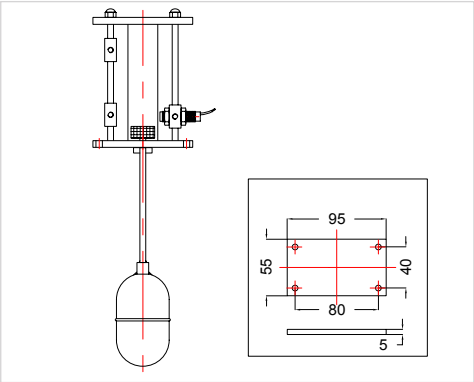


| Type | SLI-3-1-3-N |
|---|---|
| Material Type | 304/316/316L / MS |
| Mounting Flange | 95 X 55 Rectangular Flange |
| Float Size | ⌀45 mm |
| Float Material | 304/316/316L |
| Switching Contact Type | Dual Inductive Proximity Sensor |
| Temperature | 60°C |
| Additional Accessories | Not Applicable |
| Mouting Position | Vertical |

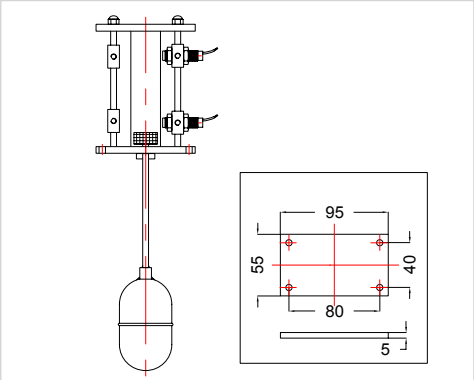


| Type | SLI-3-1-1-N |
|---|---|
| Material Type | 304/316/316L / MS |
| Mounting Flange | 85 X 85 Sq. Flange |
| Float Size | ⌀45 mm |
| Float Material | 304/316/316L |
| Switching Contact Type | Single  Reed Proximity Sensor |
| | (SPST 125 V AC / 200 V DC / 0.5A & 15 VA) |
| | (SPDT 28V AC/DC / 0.25 A & 3A ) |
| Temperature | 60°C |
| Additional Accessories | Not Applicable |
| Mouting Position | Vertical |

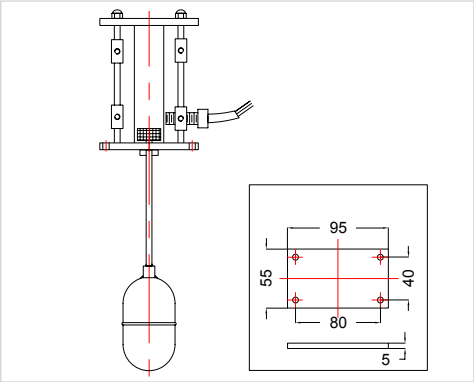


| Type | SLI-3-1-1-N |
|---|---|
| Material Type | 304/316/316L / MS |
| Mounting Flange | 95 X 55 Rectangular Flange |
| Float Size | ⌀45 mm |
| Float Material | 304/316/316L |
| Contact Type | SPDT or SPST |
| Switching Contact Type | Double Reed Proximity Sensor |
| | (SPST 125 V AC / 200 V DC / 0.5A & 15 VA) |
| | (SPDT 28V AC/DC / 0.25 A & 3A ) |
| Temperature | 60°C |
| Additional Accessories | Not Applicable |
| Mouting Position | Vertical |

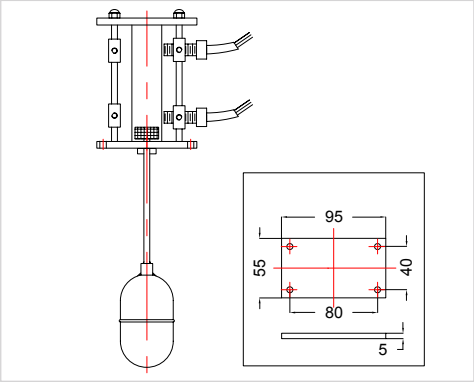

| Type | SLI-2-1-N-N |
|---|---|
| Material Type | 304/316/316L / MS |
| Mounting Flange | ⌀75 X 65 PCD Flange |
| Float Size | ⌀45 mm |
| Float Material | 304/316/316L |
| Switching Contact Type | Not Applicable |
| Temperature | 60°C |
| Additional Accessories | Not Applicable |
| Mouting Position | Vertical |

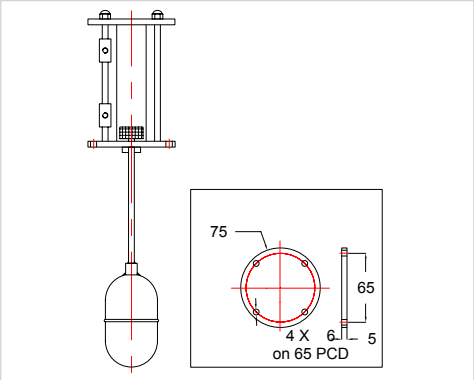


| Type | SLI-2-1-3-N |
|---|---|
| Material Type | 304/316/316L / MS |
| Mounting Flange | ⌀75 X 65 PCD Flange |
| Float Size | ⌀45 mm |
| Float Material | 304/316/316L |
| Switching Contact Type | Single Inductive Proximity Sensor |
| Temperature | 60°C |
| Additional Accessories | Not Applicable |
| Mouting Position | Vertical |

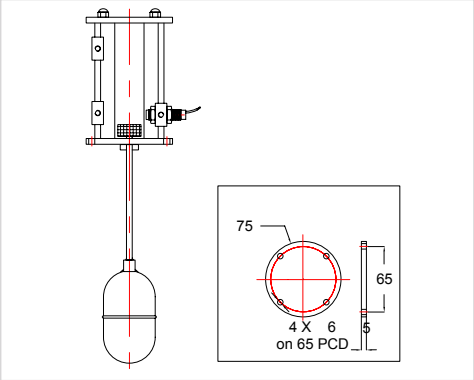


| Type | SLI-2-1-3-N |
|---|---|
| Material Type | 304/316/316L / MS |
| Mounting Flange | ⌀75 X 65 PCD Flange |
| Float Size | ⌀45 mm |
| Float Material | 304/316/316L |
| Switching Contact Type | Dual Inductive Proximity Sensor |
| Temperature | 60°C |
| Additional Accessories | Not Applicable |
| Mouting Position | Vertical |

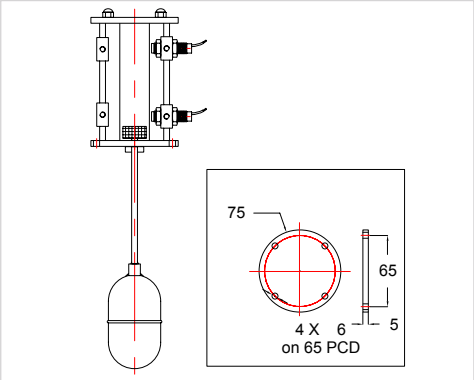


| Type | SLI-2-1-1-N |
|---|---|
| Material Type | 304/316/316L / MS |
| Mounting Flange | ⌀75 X 65 PCD Flange |
| Float Size | ⌀45 mm |
| Float Material | 304/316/316L |
| Switching Contact Type | Single Reed Proximity Sensor<br>(SPST 125 V AC / 200 V DC / 0.5A & 15 VA)<br>(SPDT 28V AC/DC / 0.25 A & 3A ) |
| Temperature | 60°C |
| Additional Accessories | Not Applicable |
| Mouting Position | Vertical |

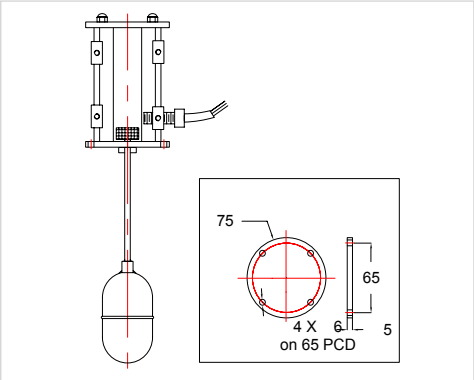


| Type | SLI-2-1-1-N |
|---|---|
| Material Type | 304/316/316L / MS |
| Mounting Flange | ⌀75 X 65 PCD Flange |
| Float Size | ⌀45 mm |
| Float Material | 304/316/316L |
| Switching Contact Type | Double Reed Proximity Sensor<br>(SPST 125 V AC / 200 V DC / 0.5A & 15 VA)<br>(SPDT 28V AC/DC / 0.25 A & 3A ) |
| Temperature | 60°C |
| Additional Accessories | Not Applicable |
| Mouting Position | Vertical |

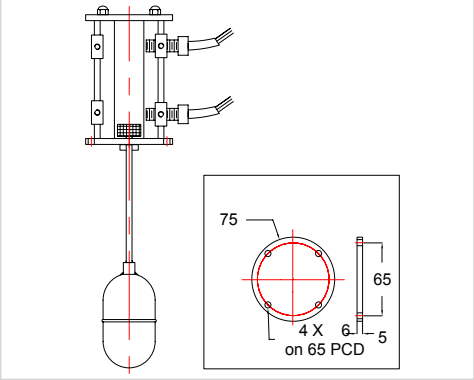

| Type | SLI-O-1-N-N |
|---|---|
| Material Type | 304/316/316L / MS |
| Mounting Flange | 120 X 120 Flange |
| Float Size | ⌀45 mm |
| Float Material | 304/316/316L |
| Switching Contact Type | Not Applicable |
| Temperature | 60°C |
| Additional Accessories | Not Applicable |
| Mouting Position | Vertical |

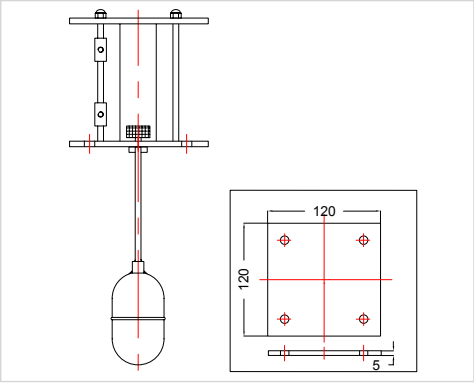


| Type | SLI-O-1-3-N |
|---|---|
| Material Type | 304/316/316L / MS |
| Mounting Flange | 120 X 120 Flange |
| Float Size | ⌀45 mm |
| Float Material | 304/316/316L |
| Switching Contact Type | Single Inductive Proximity Sensor |
| Temperature | 60°C |
| Additional Accessories | Not Applicable |
| Mouting Position | Vertical |

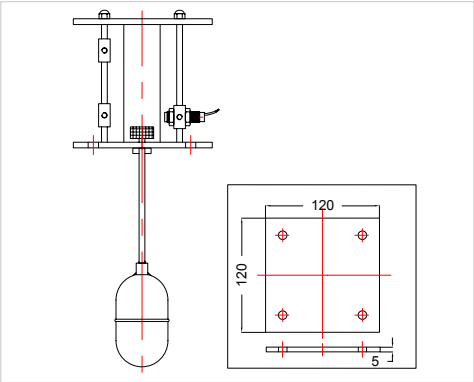


| Type | SLI-O-1-3-N |
|---|---|
| Material Type | 304/316/316L / MS |
| Mounting Flange | 120 X 120 Flange |
| Float Size | ⌀45 mm |
| Float Material | 304/316/316L |
| Switching Contact Type | Single Inductive Proximity Sensor |
| Temperature | 60°C |
| Additional Accessories | Not Applicable |
| Mouting Position | Vertical |

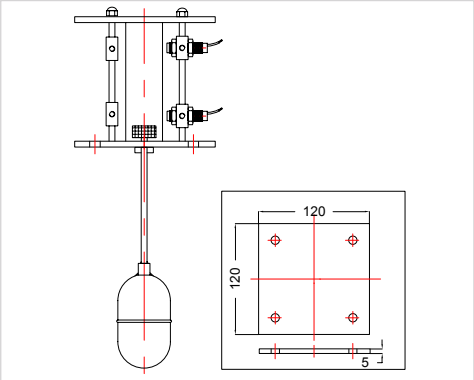


| Type | SLI-O-1-1-N |
|---|---|
| Material Type | 304/316/316L / MS |
| Mounting Flange | 120 X 120 Flange |
| Float Size | ⌀45 mm |
| Float Material | 304/316/316L |
| Switching Contact Type | Single Reed Proximity Sensor<br>(SPST 125 V AC / 200 V DC / 0.5A & 15 VA)<br>(SPDT 28V AC/DC / 0.25 A & 3A ) |
| Temperature | 60°C |
| Additional Accessories | Not Applicable |
| Mouting Position | Vertical |

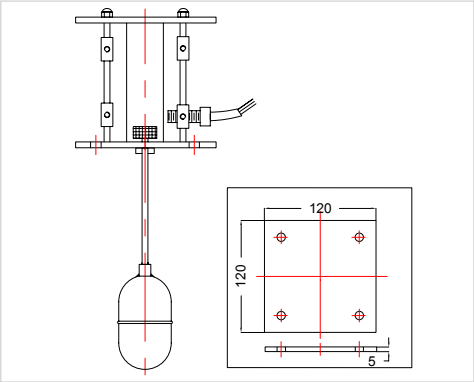


| Type | SLI-O-1-1-N |
|---|---|
| Material Type | 304/316/316L / MS |
| Mounting Flange | 120 X 120 Flange |
| Float Size | ⌀45 mm |
| Float Material | 304/316/316L |
| Contact Type | SPDT or SPST |
| Switching Contact Type | Double Reed Proximity Sensor<br>(SPST 125 V AC / 200 V DC / 0.5A & 15 VA)<br>(SPDT 28V AC/DC / 0.25 A & 3A ) |
| Temperature | 60°C |
| Additional Accessories | Not Applicable |
| Mouting Position | Vertical |

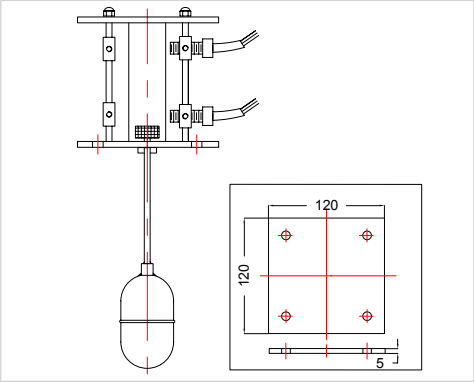

| Type | SLI-1-2-N-N |
|---|---|
| Material Type | 304/316/316L / MS |
| Mounting Flange | 85 X 85 Sq. Flange |
| Float Size | ⌀57 mm |
| Float Material | 304/316/316L |
| Switching Contact Type | Not Applicable |
| Temperature | 60°C |
| Additional Accessories | Not Applicable |
| Mouting Position | Vertical |

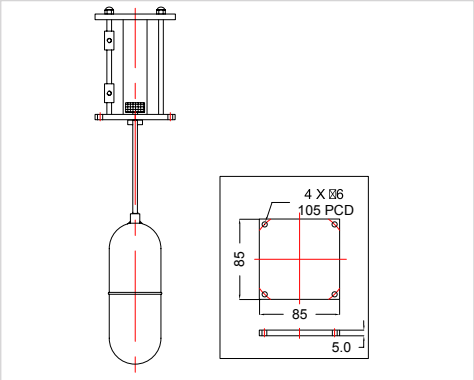


| Type | SLI-1-2-3-N |
|---|---|
| Material Type | 304/316/316L / MS |
| Mounting Flange | 85 X 85 Sq. Flange |
| Float Size | ⌀57 mm |
| Float Material | 304/316/316L |
| Switching Contact Type | Single Inductive Proximity Sensor |
| Temperature | 60°C |
| Additional Accessories | Not Applicable |
| Mouting Position | Vertical |

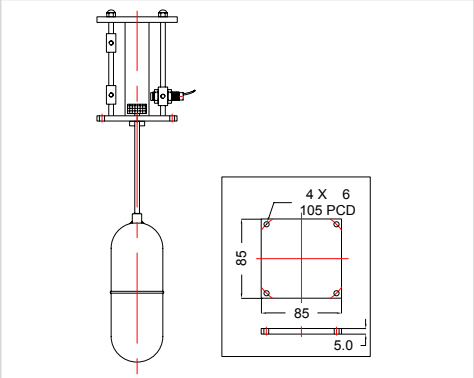


| Type | SLI-1-2-3-N |
|---|---|
| Material Type | 304/316/316L / MS |
| Mounting Flange | 85 X 85 Sq. Flange |
| Float Size | ⌀57 mm |
| Float Material | 304/316/316L |
| Switching Contact Type | Dual Inductive Proximity Sensor |
| Temperature | 60°C |
| Additional Accessories | Not Applicable |
| Mouting Position | Vertical |

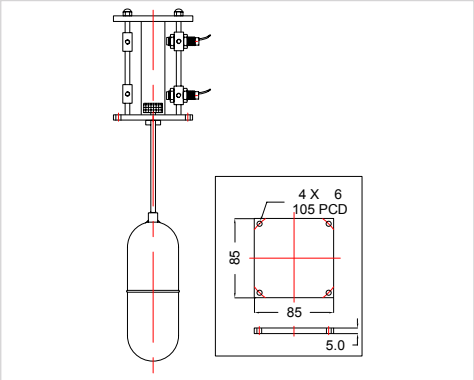


| Type | SLI-1-2-1-N |
|---|---|
| Material Type | 304/316/316L / MS |
| Mounting Flange | 85 X 85 Sq. Flange |
| Float Size | ⌀57 mm |
| Float Material | 304/316/316L |
| Switching Contact Type | Single Reed Proximity Sensor<br>(SPST 125 V AC / 200 V DC / 0.5A & 15 VA)<br>(SPDT 28V AC/DC / 0.25 A & 3A ) |
| Temperature | 60°C |
| Additional Accessories | Not Applicable |
| Mouting Position | Vertical |

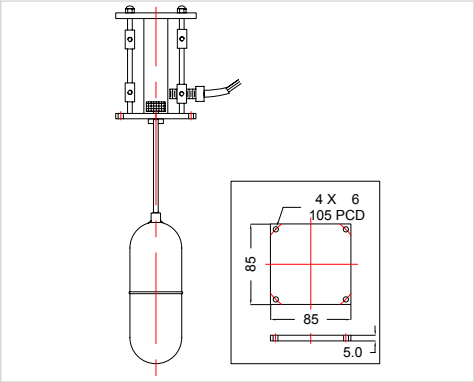


| Type | SLI-1-2-1-N |
|---|---|
| Material Type | 304/316/316L / MS |
| Mounting Flange | 85 X 85 Sq. Flange |
| Float Size | ⌀57 mm |
| Float Material | 304/316/316L |
| Contact Type | SPDT or SPST |
| Switching Contact Type | Double Reed Proximity Sensor<br>(SPST 125 V AC / 200 V DC / 0.5A & 15 VA)<br>(SPDT 28V AC/DC / 0.25 A & 3A ) |
| Temperature | 60°C |
| Additional Accessories | Not Applicable |
| Mouting Position | Vertical |

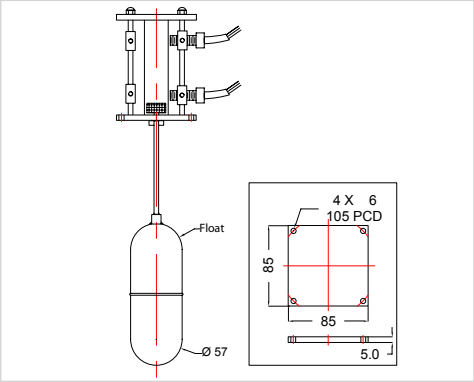

| Type | SLI-3-2-N-N |
|---|---|
| Material Type | 304/316/316L / MS |
| Mounting Flange | 95 X 55 Rectangular Flange |
| Float Size | ⌀57 mm |
| Float Material | 304/316/316L |
| Switching Contact Type | Not Applicable |
| Temperature | 60°C |
| Additional Accessories | Not Applicable |
| Mouting Position | Vertical |

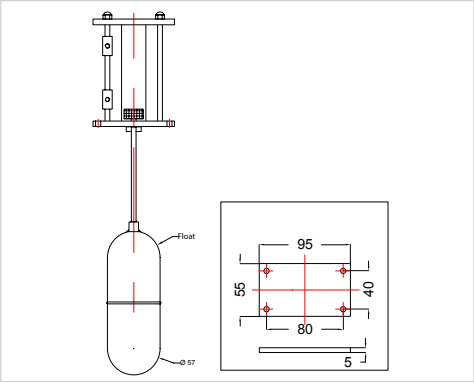


| Type | SLI-3-2-3-N |
|---|---|
| Material Type | 304/316/316L / MS |
| Mounting Flange | 95 X 55 Rectangular Flange |
| Float Size | ⌀57 mm |
| Float Material | 304/316/316L |
| Switching Contact Type | Single Inductive Proximity Sensor |
| Temperature | 60°C |
| Additional Accessories | Not Applicable |
| Mouting Position | Vertical |

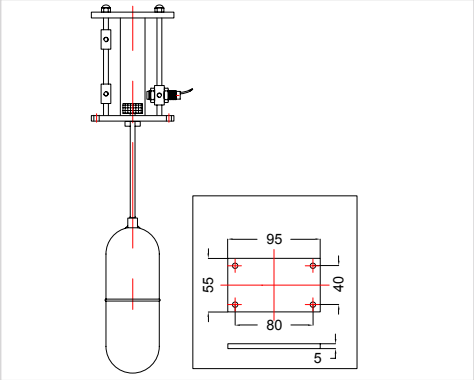


| Type | SLI-3-2-3-N |
|---|---|
| Material Type | 304/316/316L / MS |
| Mounting Flange | 95 X 55 Rectangular Flange |
| Float Size | ⌀57 mm |
| Float Material | 304/316/316L |
| Switching Contact Type | Dual Inductive Proximity Sensor |
| Temperature | 60°C |
| Additional Accessories | Not Applicable |
| Mouting Position | Vertical |

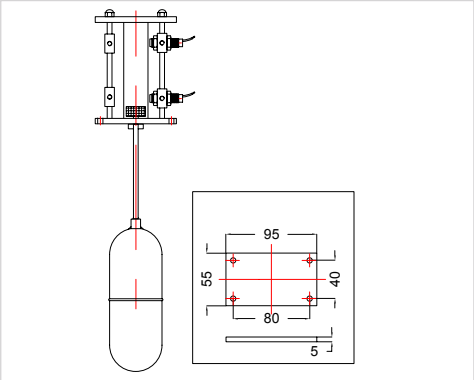


| Type | SLI-3-2-1-N |
|---|---|
| Material Type | 304/316/316L / MS |
| Mounting Flange | 95 X 55 Rectangular Flange |
| Float Size | ⌀57 mm |
| Float Material | 304/316/316L |
| Switching Contact Type | Single Reed Proximity Sensor<br>(SPST 125 V AC / 200 V DC / 0.5A & 15 VA)<br>(SPDT 28V AC/DC / 0.25 A & 3A ) |
| Temperature | 60°C |
| Additional Accessories | Not Applicable |
| Mouting Position | Vertical |

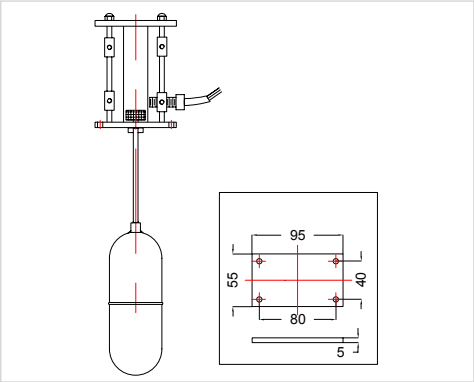


| Type | SLI-3-2-1-N |
|---|---|
| Material Type | 304/316/316L / MS |
| Mounting Flange | 95 X 55 Rectangular Flange |
| Float Size | ⌀57 mm |
| Float Material | 304/316/316L |
| Contact Type | SPDT or SPST |
| Switching Contact Type | Double Reed Proximity Sensor<br>(SPST 125 V AC / 200 V DC / 0.5A & 15 VA)<br>(SPDT 28V AC/DC / 0.25 A & 3A ) |
| Temperature | 60°C |
| Additional Accessories | Not Applicable |
| Mouting Position | Vertical |

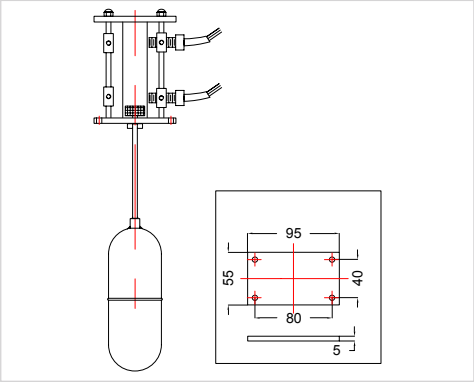

| Type | SLI-2-2-N-N |
|---|---|
| Material Type | 304/316/316L / MS |
| Mounting Flange | ⌀ 75 X 65 PCD Flange |
| Float Size | ⌀57 mm |
| Float Material | 304/316/316L |
| Switching Contact Type | Not Applicable |
| Temperature | 60°C |
| Additional Accessories | Not Applicable |
| Mouting Position | Vertical |

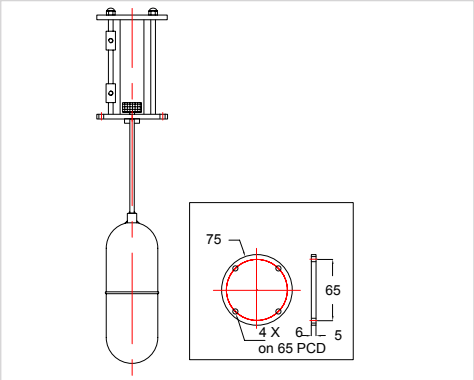


| Type | SLI-2-2-3-N |
|---|---|
| Material Type | 304/316/316L / MS |
| Mounting Flange | ⌀ 75 X 65 PCD Flange |
| Float Size | ⌀57 mm |
| Float Material | 304/316/316L |
| Switching Contact Type | Single Inductive Proximity Sensor |
| Temperature | 60°C |
| Additional Accessories | Not Applicable |
| Mouting Position | Vertical |

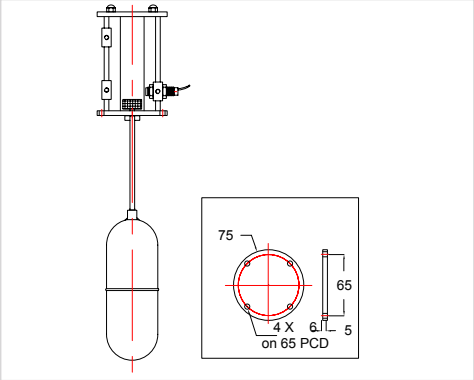


| Type | SLI-2-2-3-N |
|---|---|
| Material Type | 304/316/316L / MS |
| Mounting Flange | ⌀ 75 X 65 PCD Flange |
| Float Size | ⌀57 mm |
| Float Material | 304/316/316L |
| Switching Contact Type | Dual Inductive Proximity Sensor |
| Temperature | 60°C |
| Additional Accessories | Not Applicable |
| Mouting Position | Vertical |

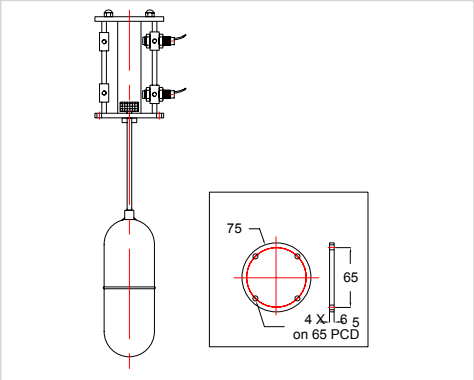


| Type | SLI-2-2-1-N |
|---|---|
| Material Type | 304/316/316L / MS |
| Mounting Flange | ⌀ 75 X 65 PCD Flange |
| Float Size | ⌀57 mm |
| Float Material | 304/316/316L |
| Switching Contact Type | Single Reed Proximity Sensor<br>(SPST 125 V AC / 200 V DC / 0.5A & 15 VA)<br>(SPDT 28V AC/DC / 0.25 A & 3A ) |
| Temperature | 60°C |
| Additional Accessories | Not Applicable |
| Mouting Position | Vertical |

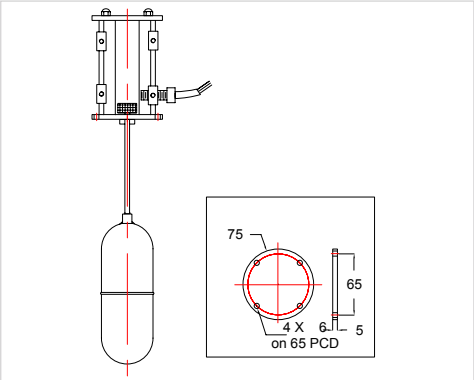


| Type | SLI-2-2-1-N |
|---|---|
| Material Type | 304/316/316L / MS |
| Mounting Flange | ⌀ 75 X 65 PCD Flange |
| Float Size | ⌀57 mm |
| Float Material | 304/316/316L |
| Contact Type | SPDT or SPST |
| Switching Contact Type | Double Reed Proximity Sensor<br>(SPST 125 V AC / 200 V DC / 0.5A & 15 VA)<br>(SPDT 28V AC/DC / 0.25 A & 3A ) |
| Temperature | 60°C |
| Additional Accessories | Not Applicable |
| Mouting Position | Vertical |

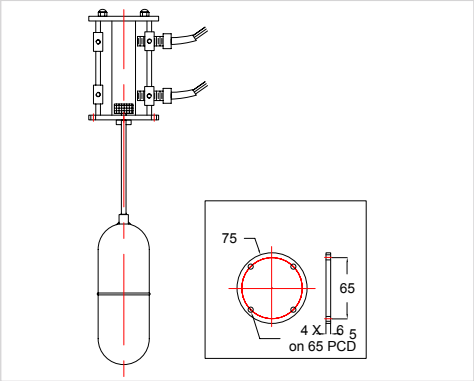

| Type | SLI-O-2-N-N |
|---|---|
| Material Type | 304/316/316L / MS |
| Mounting Flange | 120 X 120 Flange |
| Float Size | ⌀57 mm |
| Float Material | 304/316/316L |
| Switching Contact Type | Not Applicable |
| Temperature | 60°C |
| Additional Accessories | Not Applicable |
| Mouting Position | Vertical |

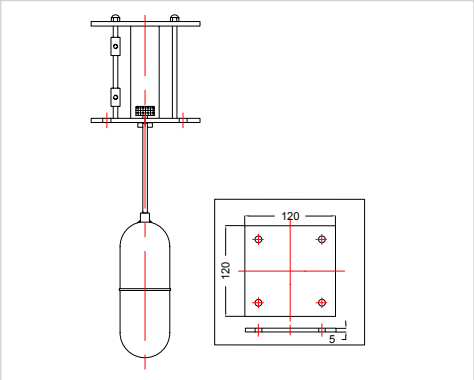


| Type | SLI-O-2-3-N |
|---|---|
| Material Type | 304/316/316L / MS |
| Mounting Flange | 120 X 120 Flange |
| Float Size | ⌀57 mm |
| Float Material | 304/316/316L |
| Switching Contact Type | Single Inductive Proximity Sensor |
| Temperature | 60°C |
| Additional Accessories | Not Applicable |
| Mouting Position | Vertical |

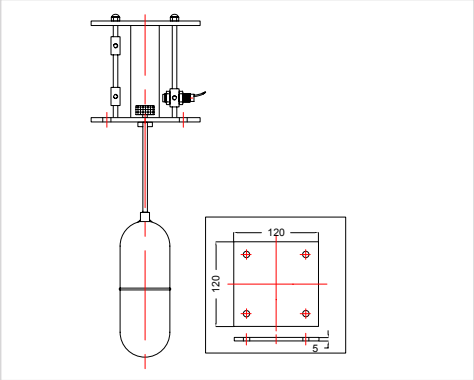


| Type | SLI-O-2-3-N |
|---|---|
| Material Type | 304/316/316L / MS |
| Mounting Flange | 120 X 120 Flange |
| Float Size | ⌀57 mm |
| Float Material | 304/316/316L |
| Switching Contact Type | Single Inductive Proximity Sensor |
| Temperature | 60°C |
| Additional Accessories | Not Applicable |
| Mouting Position | Vertical |

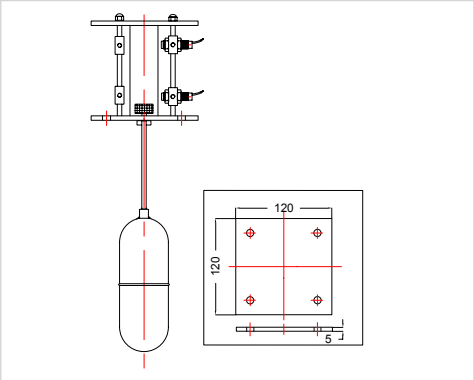


| Type | SLI-O-2-1-N |
|---|---|
| Material Type | 304/316/316L / MS |
| Mounting Flange | 120 X 120 Flange |
| Float Size | ⌀57 mm |
| Float Material | 304/316/316L |
| Switching Contact Type | Single Reed Proximity Sensor<br>(SPST 125 V AC / 200 V DC / 0.5A & 15 VA)<br>(SPDT 28V AC/DC / 0.25 A & 3A ) |
| Temperature | 60°C |
| Additional Accessories | Not Applicable |
| Mouting Position | Vertical |

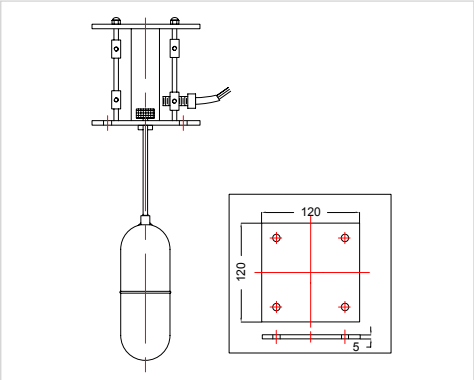


| Type | SLI-O-2-1-N |
|---|---|
| Material Type | 304/316/316L / MS |
| Mounting Flange | 120 X 120 Flange |
| Float Size | ⌀57 mm |
| Float Material | 304/316/316L |
| Contact Type | SPDT or SPST |
| Switching Contact Type | Double Reed Proximity Sensor<br>(SPST 125 V AC / 200 V DC / 0.5A & 15 VA)<br>(SPDT 28V AC/DC / 0.25 A & 3A ) |
| Temperature | 60°C |
| Additional Accessories | Not Applicable |
| Mouting Position | Vertical |

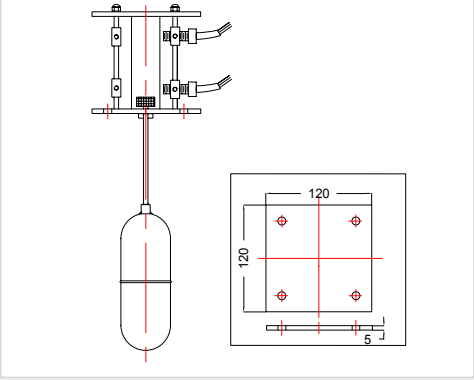

| Type | SLI-O-N-N-N |
|---|---|
| Material Type | 304/316/316L / MS |
| Mounting Flange | 120 X 120 Flange |
| Float Size | ⌀89 mm |
| Float Material | 304/316/316L |
| Switching Contact Type | Not Applicable |
| Temperature | 60°C |
| Additional Accessories | Not Applicable |
| Mouting Position | Vertical |

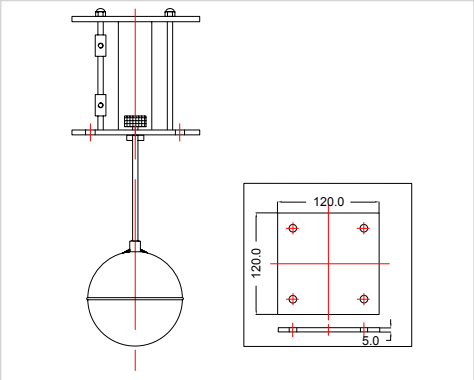


| Type | SLI-O-3-3-N |
|---|---|
| Material Type | 304/316/316L / MS |
| Mounting Flange | 120 X 120 Flange |
| Float Size | ⌀89 mm |
| Float Material | 304/316/316L |
| Switching Contact Type | Single Inductive Proximity Sensor |
| Temperature | 60°C |
| Additional Accessories | Not Applicable |
| Mouting Position | Vertical |

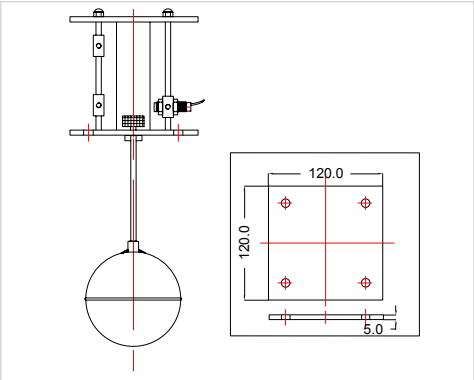


| Type | SLI-O-3-3-N |
|---|---|
| Material Type | 304/316/316L / MS |
| Mounting Flange | 120 X 120 Flange |
| Float Size | ⌀89 mm |
| Float Material | 304/316/316L |
| Switching Contact Type | Dual Inductive Proximity Sensor |
| Temperature | 60°C |
| Additional Accessories | Not Applicable |
| Mouting Position | Vertical |

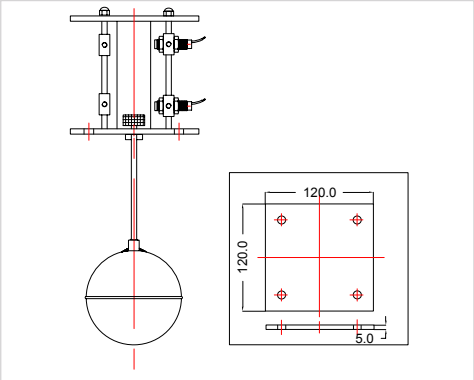


| Type | SLI-O-2-1-N |
|---|---|
| Material Type | 304/316/316L / MS |
| Mounting Flange | 120 X 120 Flange |
| Float Size | ⌀57 mm |
| Float Material | 304/316/316L |
| Switching Contact Type | Double Reed Proximity Sensor<br>(SPST 125 V AC / 200 V DC / 0.5A & 15 VA)<br>(SPDT 28V AC/DC / 0.25 A & 3A ) |
| Temperature | 60°C |
| Additional Accessories | Not Applicable |
| Mouting Position | Vertical |

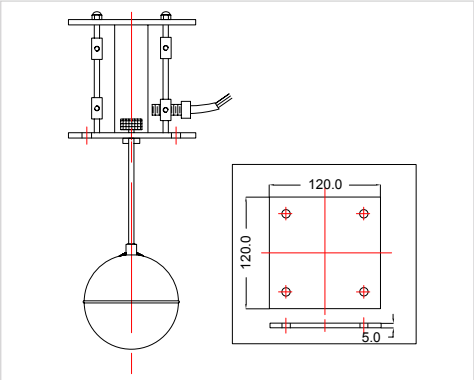


| Type | SLI-O-2-1-N |
|---|---|
| Material Type | 304/316/316L / MS |
| Mounting Flange | 120 X 120 Flange |
| Float Size | ⌀89 mm |
| Float Material | 304/316/316L |
| Contact Type | SPDT or SPST |
| Switching Contact Type | Double Reed Proximity Sensor<br>(SPST 125 V AC / 200 V DC / 0.5A & 15 VA)<br>(SPDT 28V AC/DC / 0.25 A & 3A ) |
| Temperature | 60°C |
| Additional Accessories | Not Applicable |
| Mouting Position | Vertical |

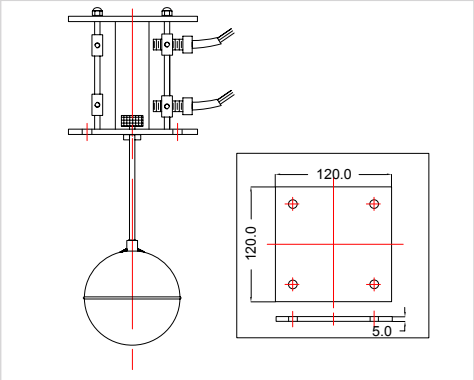

| Type | SLI-O-1-3-4 |
|---|---|
| Material Type | 304/316/316L / MS |
| Mounting Flange | With Breather Assembly |
| Float Size | ⌀45 mm |
| Float Material | 304/316/316L |
| Switching Contact Type | Single Inductive Proximity Sensor |
| Temperature | 60°C |
| Additional Accessories | Not Applicable |
| Mouting Position | Vertical |

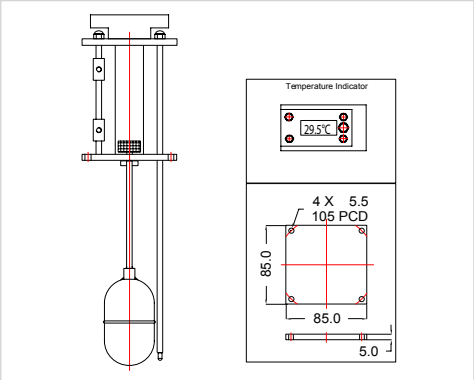


| Type | SLI-1-1-N-1 |
|---|---|
| Material Type | 304/316/316L / MS |
| Mounting Flange | 85 X 85 Sq. Flange |
| Float Size | ⌀45 mm |
| Float Material | 304/316/316L |
| Switching Contact Type | Not Applicable |
| Temperature | 60°C |
| Additional Accessories | Temperature Sensor |
| Mouting Position | Vertical |

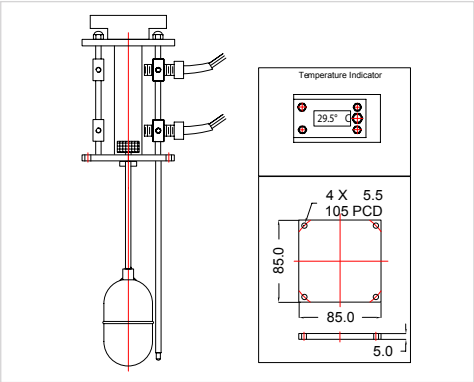


| Type | SLI-1-1-3-1 |
|---|---|
| Material Type | 304/316/316L / MS |
| Mounting Flange | 85 X 85 Sq. Flange |
| Float Size | ⌀45 mm |
| Float Material | 304/316/316L |
| Switching Contact Type | Single Inductive Proximity Sensor |
| Temperature | 60°C |
| Additional Accessories | Temperature Sensor |
| Mouting Position | Vertical |

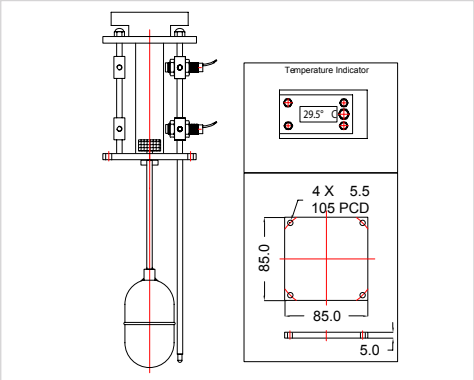


| Type | SLI-1-1-1-1 |
|---|---|
| Material Type | 304/316/316L / MS |
| Mounting Flange | 85 X 85 Sq. Flange |
| Float Size | ⌀45 mm |
| Float Material | 304/316/316L |
| Contact Type | SPDT or SPST |
| Switching Contact Type | Double Reed Proximity Sensor<br>(SPST 125 V AC / 200 V DC / 0.5A & 15 VA)<br>(SPDT 28V AC/DC / 0.25 A & 3A ) |
| Temperature | 60°C |
| Additional Accessories | Temperature Sensor |
| Mouting Position | Vertical |

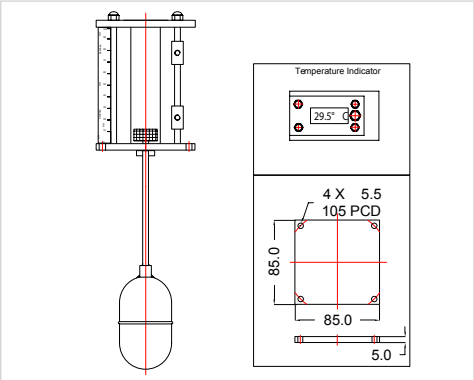


| Type | SLI-1-1-N-1 |
|---|---|
| Material Type | 304/316/316L / MS |
| Mounting Flange | 85 X 85 Sq. Flange |
| Float Size | ⌀45 mm |
| Float Material | 304/316/316L |
| Switching Contact Type | Not Applicable |
| Temperature | 60°C |
| Additional Accessories | Temperature Sensor and level transmitter |
| Mouting Position | Vertical |

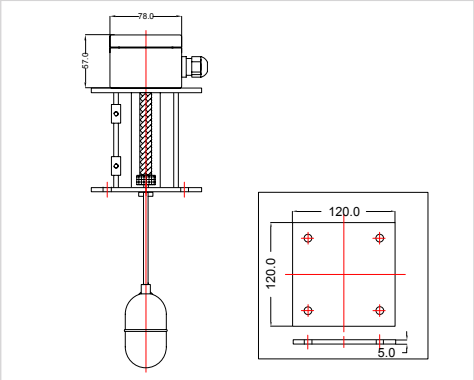

## 4.4 SIGHT LEVEL INDICATOR WITH TRANSMITTER

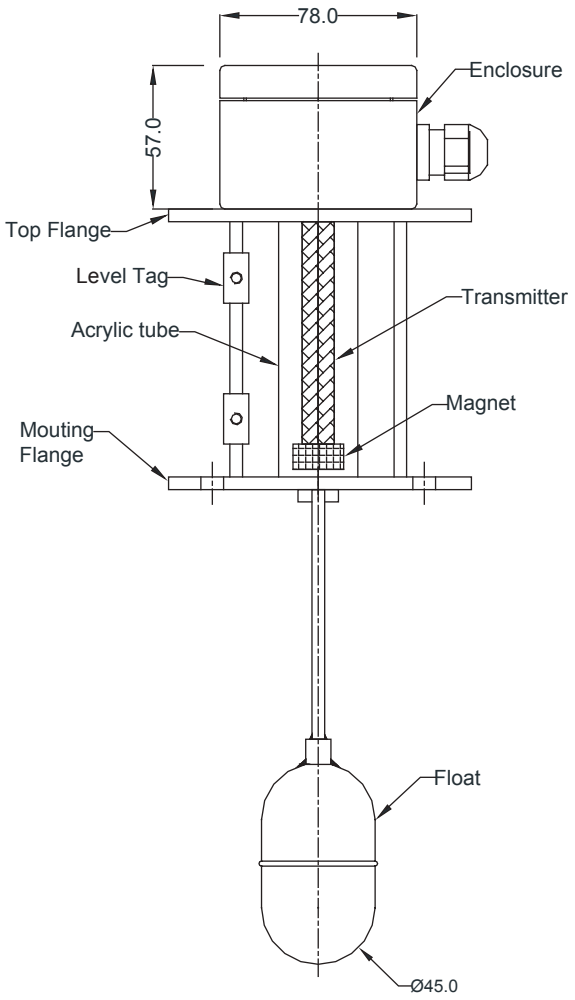


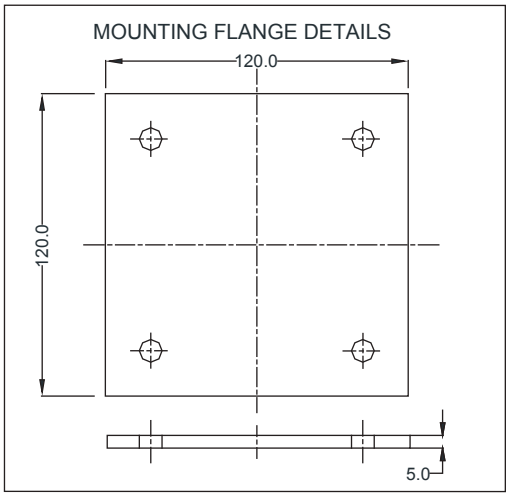

# 5 DRUM SCALE LIQUID LEVEL INDICATOR (FOR DRUMS & BARRELS) - DSI

Shridhan "Drum Scale" liquid level indicator is a mechanical device to measure the level of liquids stored in a standard drum of 210 liters (45 Gallons drum).

## 5.1 CONSTRUCTION

A hollow stainless steel pipe, sealed at bottom (stem) is fixed to the drum such that it dips through its depth. A spherical magnetic float slides onto the pipe co-axially from outside and floats on the surface of the liquid.
A square aluminium rod is placed inside the hollow pipe with a magnetic tip, on which are inscribed graduations in centimeters, liters, and mere decimal scale indicating percentage 0-100%. A stainless steel cap, secured by a small chain serves to close the assembly after use, in order to protect the graduated scale from atmosphere.

## 5.2 OPERATION

The float inside the drum slides over the stem, up and down, with the level of liquid rising and falling respectively. Level of liquid can be 'felt' by opening the screw cap at the top and by slowly inserting the graduated rod scale back into the stem, until its magnetic tip interlocks with the magnetic float, which incidentally is on the liquid surface. The scale is held at this point and the barrel contents can be read off the scale, where the square rod aligns with the mounting unit. The three surfaces of the rod are marked either in Cms, Liters, on third side in percentage.
After taking the reading, the graduated rod scale is carefully lowered into the stem and secured by closing the screw cap.

## ADVANTAGES

- Ideal for quick checking of liquid level without opening the drum every time.
- No electricity is required for measurement.
- Simple to operate merely lift the scale, 'feel' the interlock and read the level or quantity.
- High degree of realibilty and accuracy.
- Compatible with many liquids, such as water, fuels, edible oils, petrochemicals, mild chemical solutions, which are compatible with stainless steel.
- Tank content can be measured as level in Cm or as percentage of the full value or even in liters.
- Maintenance Free : If used carefully, as indicated in our manual, the gadget should last very long.
- Can be shifted from drum to drum after the pipe and float are thoroughly cleaned and dried.

## 5.3 TECHNICAL SPECIFICATIONS

| | |
|---|---|
| Mounting | : 2" BSP Male screw fits standard drum opening |
| Material of construction | : Wetted parts SS304 (Can supply also in SS-316) |
| Graduated Scale | : Aluminium Alloy |
| Operating Conditions | : Temperature limits-40C to + 70C |
| Pressure | : Up to maximum of 3 Kg/cm2 |
| Accuracy | : + 1% of full scale |

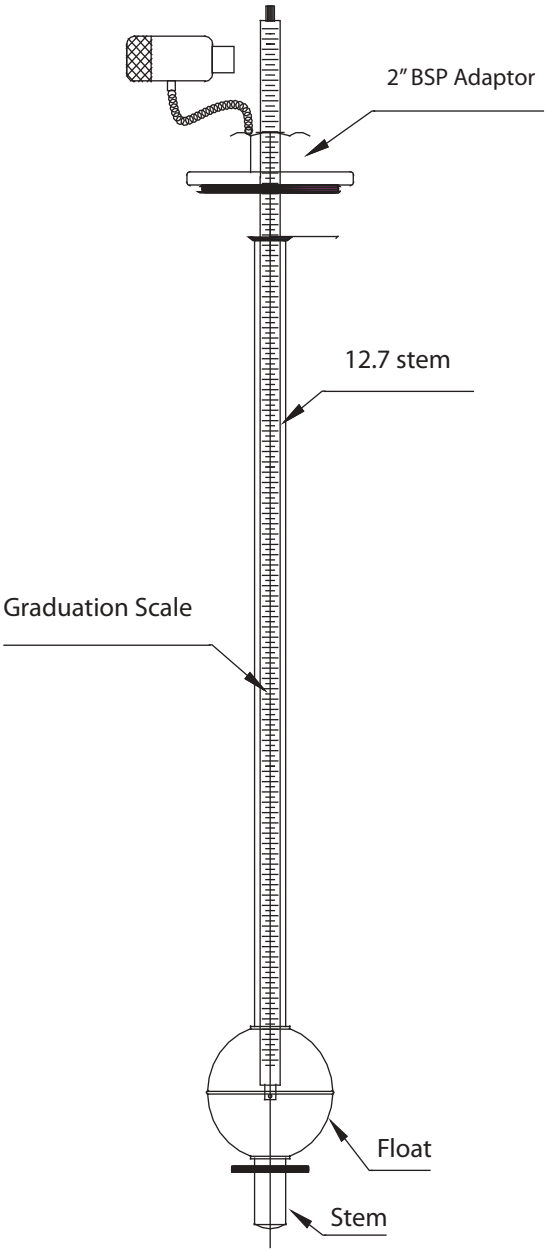


## HOW TO USE

- Unscrew and remove the protective cap.
- Lift the indicator fully till the top mounting unit and insert it back into stem slowly until slight pull is felt, as indicator magnetically locks at float and stops.
- Read level on indicator where it align with top of mounting unit.
- Lower the indicator back into unit, replace protective cap.

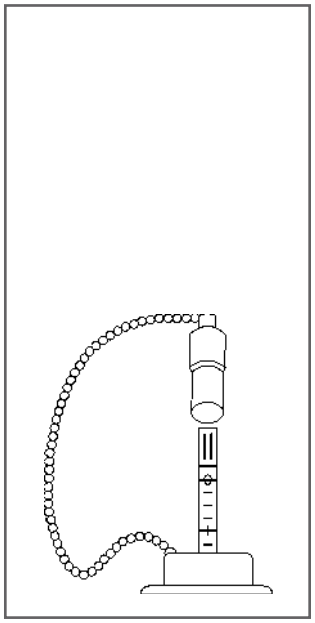

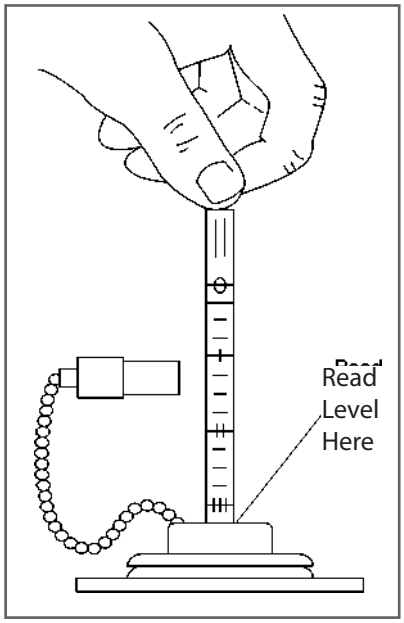


**NOTE :**

1. Standard product is for 45 Gallon Drum (210 liter barrel) but we can custom-build the device for other storage vessels.
2. Other materials like PVC can be used in custom made.

## LIMITATIONS

1. When the drum level is below 30 mm, accurate indication is not available owing to the float resting on bottom stopper.
2. The drum scale may not work, when the liquid stored inside the drum solidifies, freezes, crystalizes or forms scales on the steam.
3. Not suitable for solvent based solutions like varnishes, paints and other liquids which are film-forming upon and drying up

Notes :

SHRIDHAN®
Automate your Field

INDIA

HEAD OFFICE AND FACTORY

**SHRIDHAN Automation Pvt. Ltd.**
#B-54, KSSIDC Industrial Estate, Kumbalgodu , Mysore Road
Bangalore - 560074
INDIA
Phone: +91-80-28437847/+91-80-28437848

UNIT-2

**SHRIDHAN Automation Pvt. Ltd.**
D13, KIADB Industrial Area,Kumbalgodu, Mysore Road
Bangalore - 560074
INDIA

Email: info@shridhan.com
Website : www.shridhan.com

MIDDLE EAST

**Orbit Automation FZE**
#R4-40 A, PO Box - 122828
SAIF Zone,Sharjah
INDIA
( A 100% SUBSIDIARY OF SHRIDHAN Automation, INDIA)
Contact :+97155 - 9347963 / +97155 - 1883375
Email: me@shridhan.com

**Indian Marketing Network**
Mangalore | New Delhi | Ahmedabad | Pune | Mumbai | Chennai

**International Marketing Network**
Middle East | Singapore | Malaysia | Thailand | Netherlands | USA

Disclaimer: We reserve the right to modify the design without prior notice

SAPL/CTGE/SLG/2017