3P Technik -DD TECHNICHE SB

3P Filter Collector

Art.-Nr. 2000810 brown
Art.-Nr. 2000820 grey

Description:

The 3P Filter Collector filters and collects rainwater for water butts and rain tanks.
It is made of high quality durable plastic.

The Filter Collector leads clean water to the storage tank with high efficiency under normal rainfall (85 to 95%). The filter can act as the overflow outlet for the tank once filled.

With 2 positions open or closed.

Integrated filter sieve. The mesh is made of stainless steel (mesh size 0,7 x 1,7 mm).

For roof areas up to 70 m².

For installation in downpipes at 68 mm and 110 mm, adapters included.

Easy installation and maintenance.

Complete with adapter and reduction sets.

Technical Description:

1. Reduction at Ø 68 - 100 mm.
2. Connector for downpipes Ø 110 mm.
3. Outlet connection at Ø 75 mm.
4. Adapter for connection Ø 50 mm/32 mm.
5. Guiding plates.
6. Stainless Steel filter mesh.
7. Settings for open/closed conditions.

How it works:

1. Rainwater is channelled from the filter entrance to the sieve cartridge.
2. Dirt is rinsed to the sides, and to waste.
3. Cleaned water is led through the cartridge outlet channel to storage.
4. Settings for winter and summer conditions. Twist 180° to remove cartridge filter, no need to demount filter body.
   The filter cartridge can be cleaned easily with detergent and a brush.

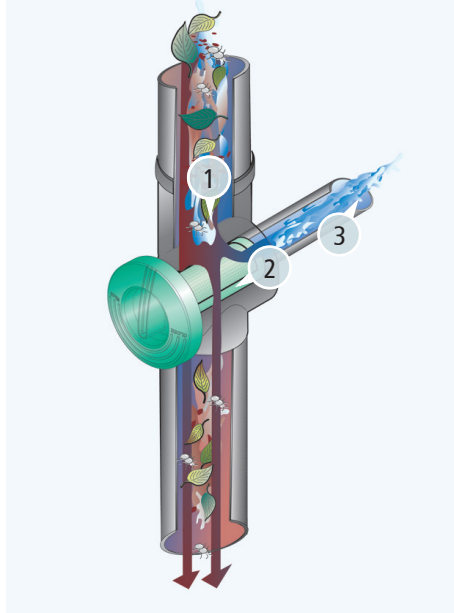

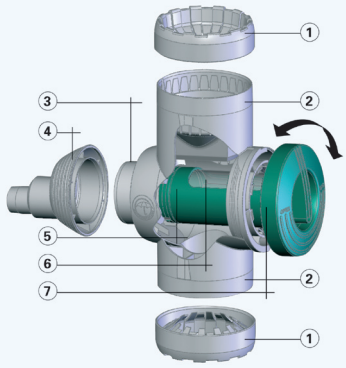

Technical Data:

Assembly in standpipes or downpipes at Ø68 - 110 mm.

Housing material: Polyethylen
Material filter sieve: stainless steel 1.403

Mesh size 0,7 x 1,7 mm
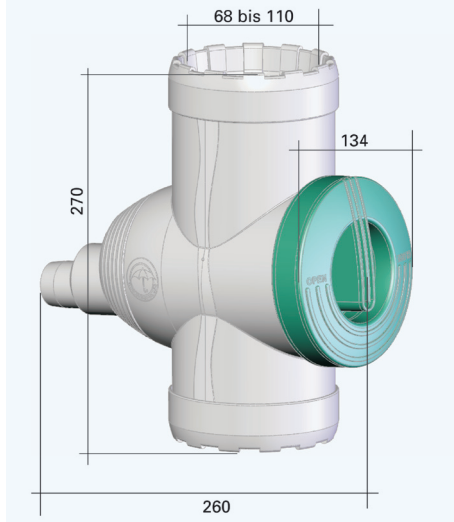
Weight: 0,86 kg