CMP
Century
motors
Producer

PRODUCTS CATALOGUE
COMMERCIAL AND INDUSTRIAL

NMRV WORM GEAR & VARIATOR

CMP Century motors Producer
NMRV WORM GEAR & VARIATOR
2021

NMRV SERIES REDUCER

Structural picture

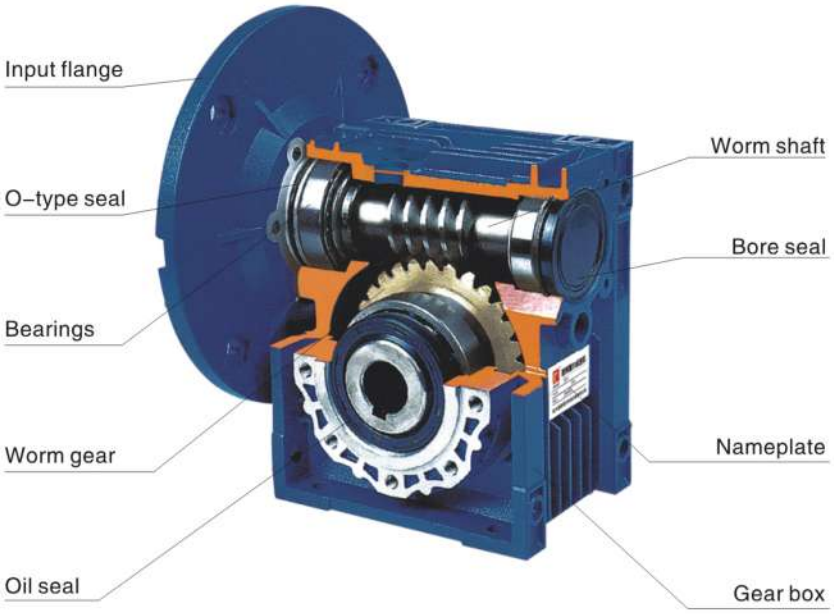

NMRV Worm-gear speed reducer

Type mark

RV L E 063 - F1 - A1 - 50 - B3

- RV: A–alloy casing hardened–surface worm
- L: Shaft input S double–input shaft without mark=single–input shaft
- E: Double–geared transmission
- 063: Center distance
- F1: F1 equipped with short output flange,F2 equipped with long output flange, no mark=without output flange
- A1: A1 equipped with single output shaft, no mark= without output shaft
- 50: RATIO (i)
- B3: Installation type

NMRV Mounting positions

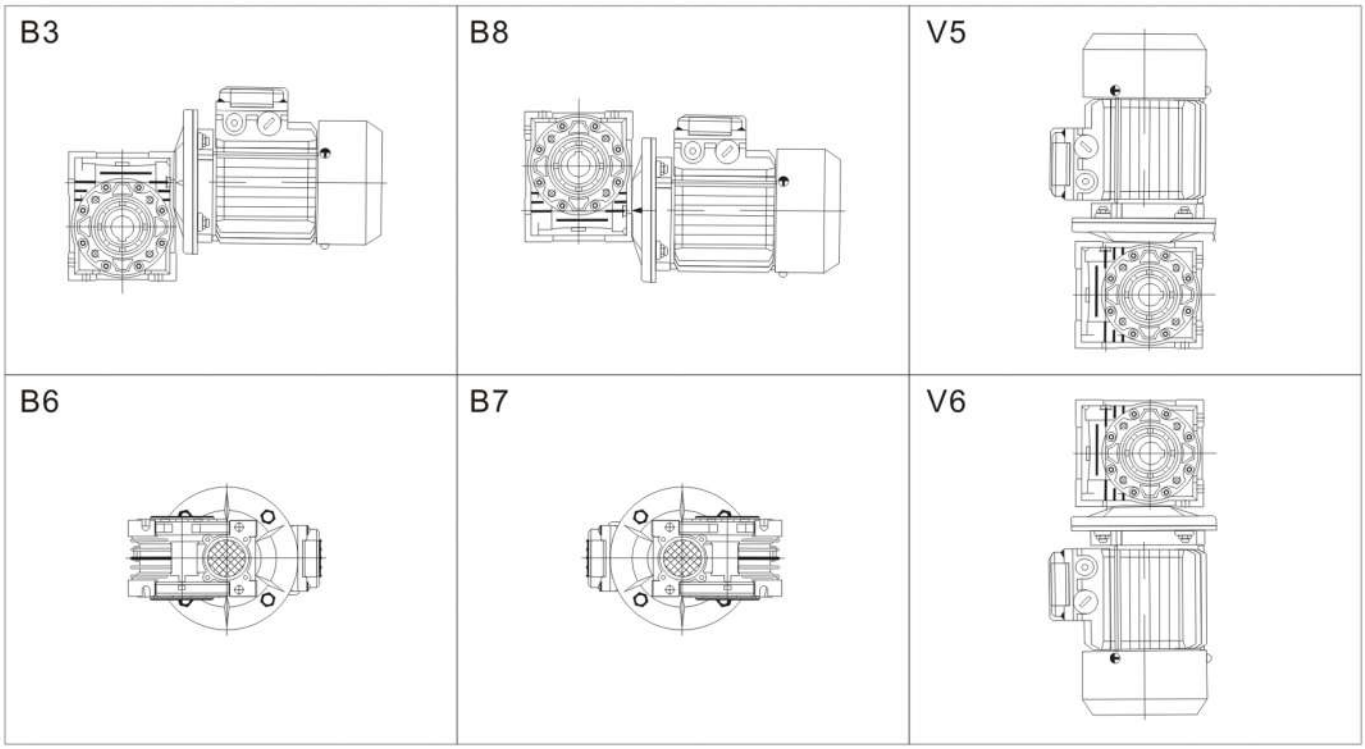

Output flange(F,FL)

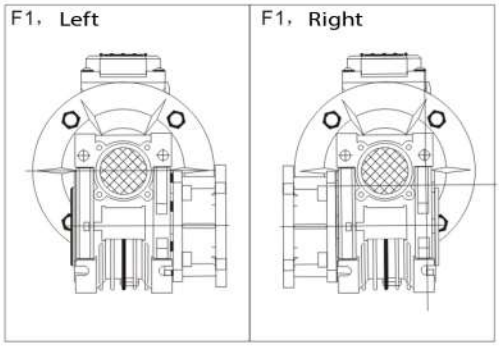

Torque arm(B)

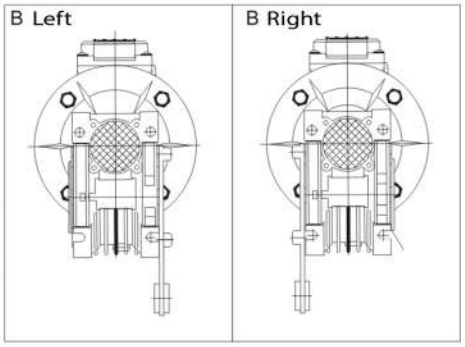

Position of motor terminal box

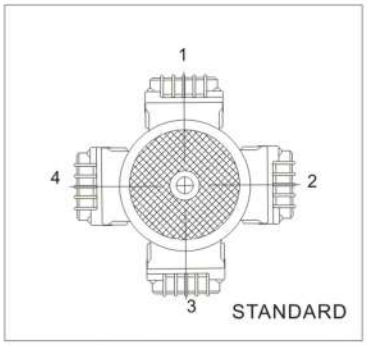

Output shaft of worm(A1, A2)

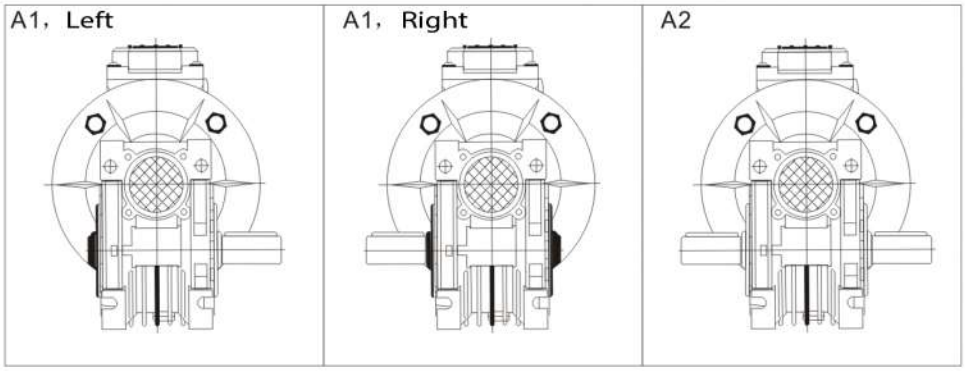

Extension input of worm shaft

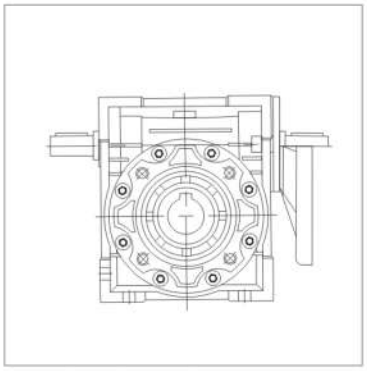

NMRV Performance parameter(n1=1400r/min)

KW	TYPE	I	N_2(r/min)	M_2(N.M)
0.06KW	RV025	7.5	186	2.6
	RV030			
	RV025	10	140	3.4
	RV030			
	RV025	15	94	4.9
	RV030			4.8
	RV025	20	70	6.1
	RV030			5.5
	RV030	25	56	7.2
	RV025	30	47	8.2
	RV030			
	RV025	40	35	10
	RV030			8.5
	RV025	50	28	12
	RV030			11.6
	RV040			12.4
	RV025	60	24	14
	RV030			12.8
	RV040			12.6
	RV030	80	18	13.8
	RV040			16.8
	RV040	100	14	19.5
0.09KW	RV025	7.5	186	3.9
	RV030			4.0
	RV025	10	140	5.1
	RV030			
	RV025	15	94	7.3
	RV030			7.2
	RV025	20	70	9.2
	RV030			8.3
	RV030	25	56	10.7
	RV025	30	47	12
	RV030			12.3
	RV025	40	35	15
	RV030			12.8
	RV030	50	28	17.4
	RV040			18.6
	RV030	60	24	19.2
	RV040			19.0
	RV040	80	18	25.2
	RV040	100	14	29.3
0.12KW	RV030	7.5	186	5.3
	RV040			5.3
	RV030	10	140	6.8
	RV040			8.9
	RV030	15	94	9.6
	RV040			9.9
	RV030	20	70	11.0
	RV040			13.0
	RV030	25	56	14.3
	RV040			15.1

KW	TYPE	I	N_2(r/min)	M_2(N.M)
0.12KW	RV030	30	47	16.4
	RV040			16.6
	RV030	40	35	17.0
	RV040			21.9
	RV050			22.7
	RV030	50	28	23.2
	RV040			24.7
	RV050			26.0
	RV040	60	24	25.3
	RV050			26.2
	RV040	80	18	33.6
	RV050			34.7
	RV040	100	14	39.0
	RV050			39.6
0.18KW	RV030	7.5	186	7.9
	RV040			7.9
	RV030	10	140	10.2
	RV040			10.3
	RV030	15	94	14.4
	RV040			14.8
	RV030	20	70	16.5
	RV040			19.5
	RV030	25	56	21.5
	RV040			22.7
	RV030	30	47	24.6
	RV040			24.9
	RV040	40	35	32.8
	RV050			34.0
	RV040	50	28	37.1
	RV050			39.0
	RV040	60	24	37.9
	RV050			39.2
	RV050	80	18	52.1
	RV050	100	14	59.3
0.25KW	RV040	7.5	186	11.0
	RV050			11.2
	RV040	10	140	14.3
	RV050			14.5
	RV040	15	94	20.6
	RV050			20.7
	RV040	20	70	27.0
	RV050			27.5
	RV040	25	56	31.5
	RV050			32.8
	RV040	30	47	34.6
	RV050			36.4
	RV040	40	35	45.6
	RV050			47.3
	RV050	50	28	54.1
	RV050	60	24	54.5
	RV050	80	18	72.4
	RV063			76.7
	RV063	100	14	82.8

NMRV Performance parameter(n1=1400r/min)

KW	TYPE	i	N_2(r/min)	M_2(N.M)
0.37KW	RV040	7.5	186	16.3
	RV050			16.6
	RV040	10	140	21.2
	RV050			21.5
	RV040	15	94	30.5
	RV050			30.6
	RV040	20	70	40.0
	RV050			40.7
	RV040	25	56	46.6
	RV050			48.7
	RV040	30	47	51.2
	RV050			53.8
	RV050	40	35	67.0
	RV063			72.3
	RV050	50	28	80.1
	RV063			83.3
	RV050	60	24	80.6
	RV063	60	24	86.5
	RV063	80	18	113.5
	RV063	100	14	122.6
0.55KW	RV050	7.5	186	24.3
				24.6
	RV050	10	140	31.5
				32.0
	RV050	15	94	45.3
				45.5
	RV063			46.7
	RV050	20	70	60.5
	RV063			61.6
	RV050	25	56	72.3
	RV063			73.2
	RV050	30	47	80.0
	RV063			83.3
	RV050	40	35	104.0
	RV063			107.5
	RV075			115.7
	RV063	50	28	123.9
	RV075			144.3
	RV063	60	24	128.6
	RV075			156.5
	RV075	80	18	215.8
	RV075	100	14	235.0
0.75KW	RV050	7.5	186	33.6
	RV063			33.8
	RV050	10	140	43.6
	RV063			44.5
	RV050	15	94	62.0
	RV063			63.7
	RV050	20	70	82.4
	RV063			84.0
	RV063	25	56	99.8
	RV063	30	47	113.6
	RV075			124.4
	RV063	40	35	146.6
	RV075			157.8

KW	TYPE	i	N_2(r/min)	M_2(N.M)
0.75KW	RV075	50	28	196.8
	RV090			186.1
	RV075	60	24	213.4
	RV090			211.9
	RV090	80	18	261.1
	RV090	100	14	292.7
1.1KW	RV063	7.5	186	49.6
	RV075			51.4
	RV063	10	140	65.3
	RV075			67.8
	RV063	15	94	93.5
	RV075			98.6
	RV063	20	70	123.2
	RV075			127.7
	RV063	25	56	146.4
	RV075			159.2
	RV063	30	47	166.7
	RV075			182.5
	RV075	40	35	231.4
1.1KW	RV090	40	35	229.7
	RV090	50	28	272.9
	RV090	60	24	310.8
	RV110			319.1
	RV110	80	18	403.8
	RV110	100	14	471.2
1.5KW	RV063	7.5	186	67.6
	RV075			70.1
	RV063	10	140	89.1
	RV075			92.5
	RV063	15	94	127.5
	RV075			134.5
	RV063	20	70	167.9
	RV075			174.1
	RV075	25	56	217.1
	RV090			211.0
	RV075	30	47	248.9
	RV090			247.1
	RV090	40	35	313.3
	RV090	50	28	372.1
	RV110			392.9
	RV090	60	24	423.8
	RV110			435.1
	RV110	80	18	550.7
	RV130			534.0
	RV130	100	14	672.2
2.2KW	RV075	7.5	186	102.8
	RV090			101.9
	RV110			101.8
	RV075	10	140	135.7
	RV090			134.8
	RV110			133.7
	RV075	15	94	197.3
	RV090			196.7
	RV110			192.7
	RV090	20	70	254.9
	RV110			254.5
	RV090	25	56	309.5
	RV110			319.2
	RV090	30	47	362.4
	RV110			354.5

RV Performance parameter(n1=1400r/min)

KW	TYPE	i	n_2(r/min)	M_2(N.M)
2.2KW	RV110	40	35	465.8
	RV110	50	28	576.2
	RV130			568.7
	RV150			570
	RV110	60	24	638.1
	RV130			655.6
	RV150			657
	RV130	80	18	783.1
	RV150			816
	RV130	100	14	985.9
	RV150			960
3.0KW	RV075	7.5	186	140.1
	RV090			139.0
	RV110			138.8
	RV075	10	140	185.0
	RV090			183.8
	RV110			182.3
	RV075	15	94	269.0
	RV090			268.2
	RV110			262.7
	RV090	20	70	347.7
	RV110			347.0
	RV090	25	56	422.0
	RV110	25	56	435.3
	RV090	30	47	494.1
	RV110			483.3
	RV110	40	35	635.1
	RV130			637.6
	RV110	50	28	785.8
	RV130			775.5
	RV150			777
	RV130	60	24	894.0
	RV150			896
	RV150	80	18	1113
	RV150	100	14	1310
4.0KW	RV075	7.5	186	186.8
	RV090			185.3
	RV110			185.0
	RV130			187.1
	RV090	10	140	245.1
	RV110			243.1
	RV130			243.1
	RV090	15	94	357.7
	RV110			350.3
	RV130			354.3
	RV090	20	70	463.5
	RV110			462.7
	RV130			469.3
	RV110	25	56	580.4
	RV130			576.4
	RV110	30	47	644.5
	RV130			652.6
	RV130	40	35	850.1
	RV130	50	28	1034.0
	RV150			1036

KW	TYPE	i	n_2(r/min)	M_2(N.M)
4.0KW	RV130	60	24	1192.0
	RV150			1195
	RV150	80	17.5	1484
5.5KW	RV110	7.5	186	254.4
	RV130			257.2
	RV110	10	140	334.3
	RV130			334.3
	RV110	15	94	481.6
	RV130			487.2
	RV110	20	70	636.2
	RV130			645.2
	RV150			645
	RV130	25	56	792.5
	RV150			788
	RV130	30	47	897.3
	RV150			934
	RV130	40	35	1168.9
	RV150			1171
	RV150	50	28	1426
	RV150	60	24	1643
7.5KW	RV110	7.5	186	346.9
	RV130			350.8
	RV110	10	140	455.8
	RV130			455.8
	RV130	15	94	664.8
	RV130	20	70	879.9
	RV150			880
	RV130	25	56	1080.7
	RV150			1074
	RV150	30	47	1274
	RV150	40	35	1596
11KW	RV150	7.5	186	512
	RV150	10	140	675
	RV150	15	94	990
	RV150	20	70	1291
	RV150	25	56	1576
15KW	RV150	7.5	186	698
	RV150	10	140	921
	RV150	15	94	1351
	RV150	20	70	1760

NMRV Dimensions

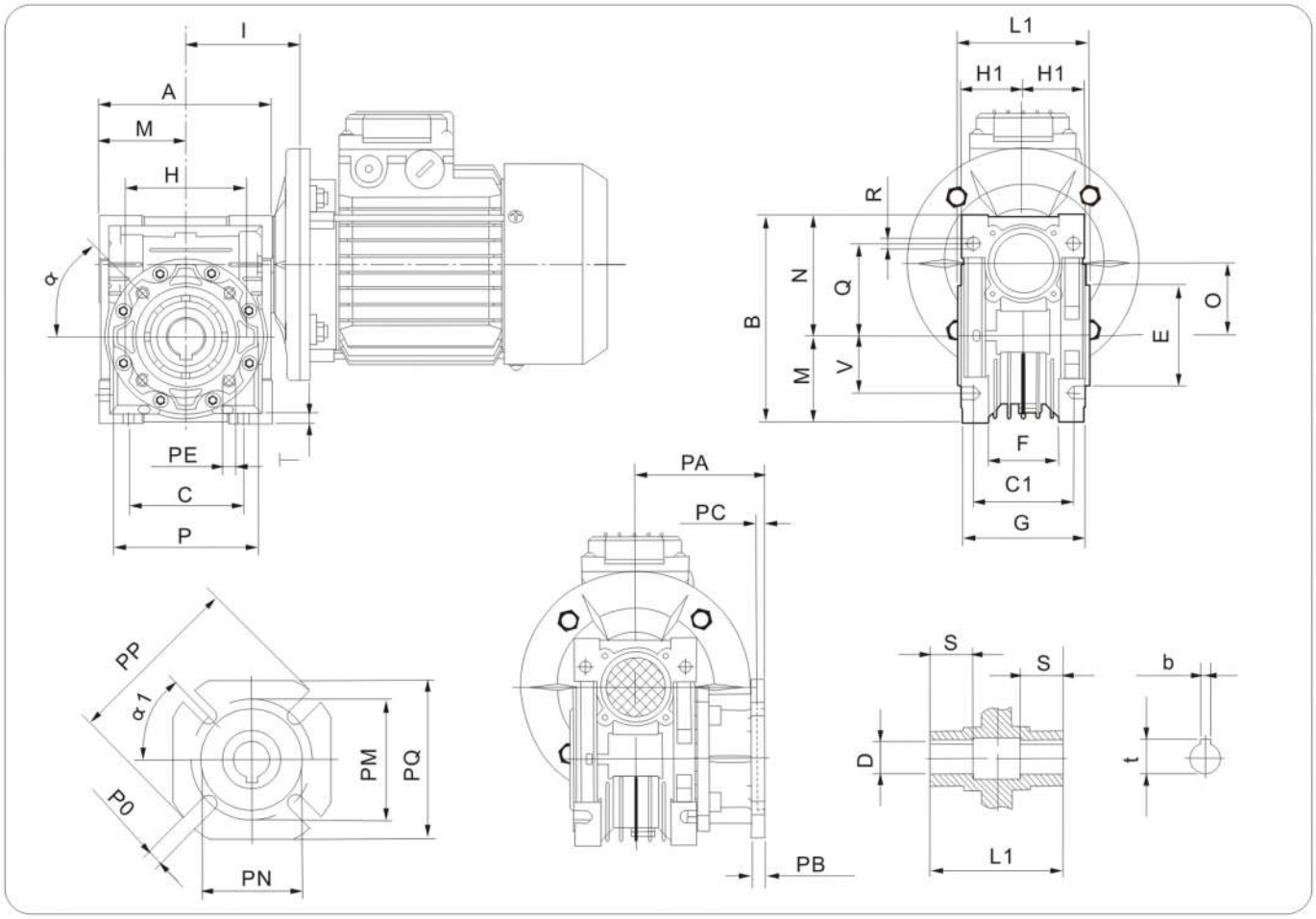

RV	A	B	C	C1	D(F7)	E(H8)	F	G	H	H1	I	L1	M	N	O	P	Q	R
025	71	83	45	34	11	45	22	42	55	22.5	45	50	35	48	25	65	35.5	6
030	81	97	54	44	14	55	32	56	65	29	55	63	40	57	30	75	44	6.5
040	100	121.5	70	60	18(19)	60	43	71	75	35.5	70	78	50	71.5	40	87	55.25	6.5
050	121	144	80	70	25(24)	70	49	85	85	42.5	80	92	60	84	50	100	64	8.5
063	146	174	100	85	25(28)	80	67	103	95	51.5	95	112	72	102	63	110	80	8.5
075	174	205	120	90	28(35)	95	72	112	115	56	113	120	86	119	75	140	93	11
090	208	238	140	100	35(38)	110	74	130	130	65	130	140	103	135	90	160	102	13
110	252.5	295	170	115	42	130	-	144	165	72	160	155	127.5	167.5	110	200	125	14
130	292.5	335	200	120	45	180	-	155	215	77.5	180	170	147.5	187.5	130	250	140	16
150	340	400	240	145	50	180	-	185	215	96	210	200	170	230	150	250	180	18

RV	S	T	V	PA	PB	PC	PE	PM	PN(H8)	PO	PP	PQ	b	t	α	α1	Kg
025	17	5	22	45	6	2.5	ϕ7(n=3)	55	40	6.5(n=4)	75	70	4	12.8	10°	45°	0.7
030	21	5.5	27	54.5	6	4	M6x11(n=4)	68	50	6.5(n=4)	80	70	5	16.3	0°	45°	1.2
040	26	6.5	35.5	67(97)	7.5	4	M6x8(n=4)	75	60	9(n=4)	110	95	6(6)	20.8(21.8)	45°	45°	2.3
050	30	7	40	90(120)	9	5	M8x10(n=4)	85	70	11(n=4)	125	110	8(8)	28.3(27.3)	45°	45°	3.5
063	36	8	50	82(112)	10	6	M8x14(n=8)	150	115	11(n=4)	180	142	8(8)	28.3(31.3)	45°	45°	5.5
075	40	10	60	111	13	6	M8x14(n=8)	165	130	14(n=4)	200	170	8(10)	31.3(38.3)	45°	45°	8.1
090	45	11	70	111	13	6	M10x18(n=8)	175	152	14(n=4)	210	200	10(10)	38.3(41.3)	45°	45°	11.8
110	50	14	85	131	15	6	M10x18(n=8)	230	170	14(n=8)	280	260	12	45.3	45°	45°	35.5
130	60	15	100	140	15	6	M12x21(n=8)	255	180	16(n=8)	320	290	14	48.8	45°	22.5°	48
150	70	18	120	155	15	6	M12x21(n=8)	255	180	16(n=8)	320	290	14	53.8	45°	22.5°	84

RVL Dimensions

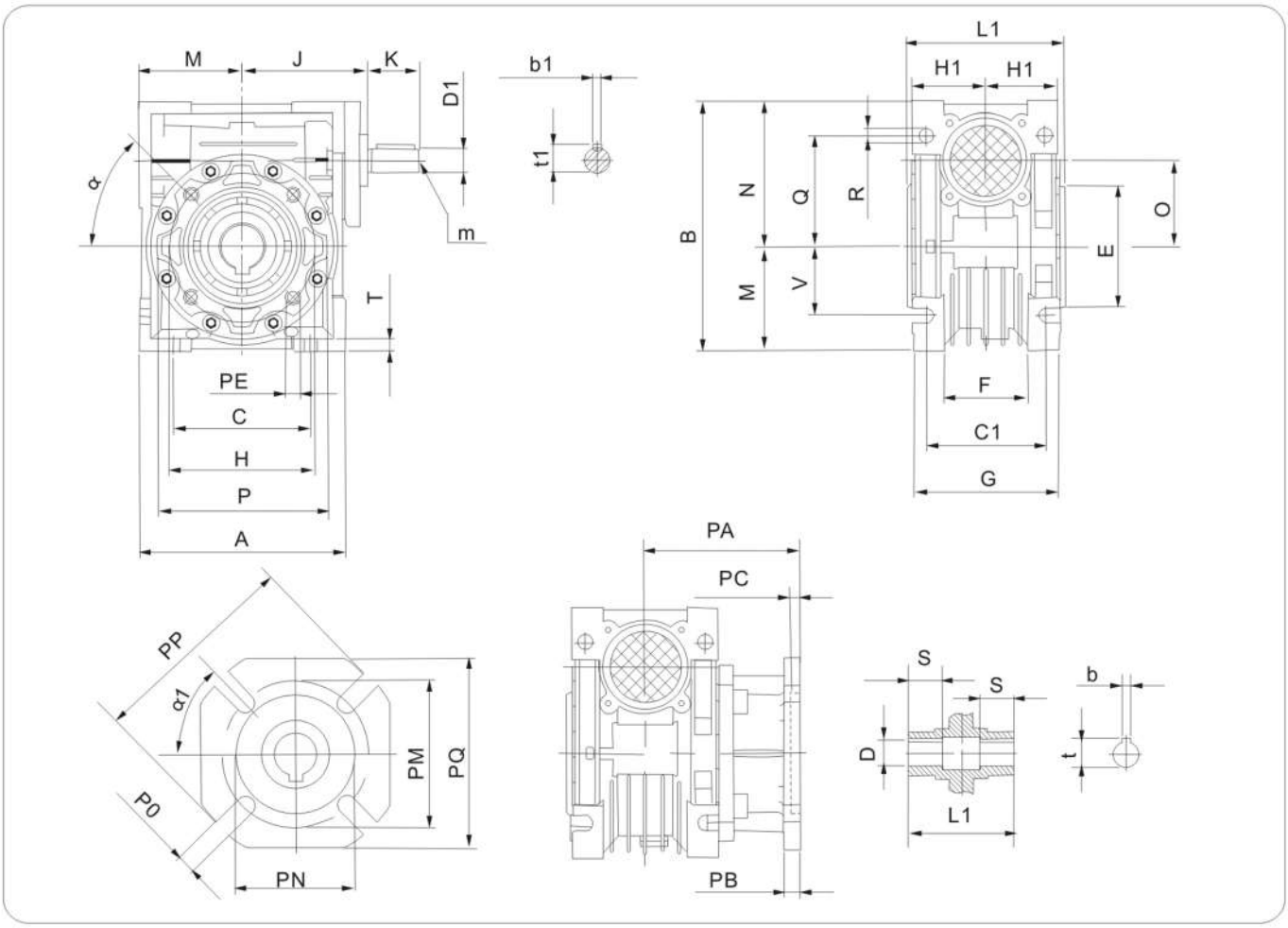

RVL	A	B	C	C1	D (F7)	D1(j6)	E(h8)	F	G	H	H1	J	K	L1	M	N	O	P	Q	R
030	81	97	54	44	14	9	55	32	56	65	29	51	20	63	40	57	30	75	44	6.5
040	100	121.5	70	60	18(19)	11	60	43	71	75	35.5	65	24	78	50	71.5	40	87	55.25	6.5
050	121	144	80	70	25(24)	14	70	49	85	85	42.5	74	30	92	60	84	50	100	64	8.5
063	146	174	100	85	25(28)	19	80	67	103	95	51.5	90	40	112	72	102	63	110	80	8.5
075	174	205	120	90	28(35)	24	95	72	112	115	56	105	50	120	86	119	75	140	93	11
090	208	238	140	100	35(38)	24	110	74	130	130	65	125	50	140	103	135	90	160	102	13
110	252.5	295	170	115	42	28	130	-	144	165	72	142	60	155	127.5	167.5	110	200	125	14
130	292.5	335	200	120	45	30	180	-	155	215	77.5	162	80	170	147.5	187.5	130	250	140	16
150	340	400	240	145	50	35	180	-	185	215	96	195	80	200	170	230	150	250	180	18

RVL	S	T	V	PA	PB	PC	PE	PM	PN(H8)	PO	PP	PQ	b	b1	t	t1	m	α	α1	Kg
030	21	5.5	27	54.5	6	4	M6x11(n=4)	68	50	6.5(n=4)	80	70	5	3	16.3	10.2	-	0°	45°	1.2
040	26	6.5	35.5	67(97)	7.5	4	M6x8(n=4)	75	60	9(n=4)	110	95	6(6)	4	20.8(21.8)	12.5	-	45°	45°	2.3
050	30	7	40	90(120)	9	5	M8x10(n=4)	85	70	11(n=4)	125	110	8(8)	5	28.3(27.3)	16.0	M6	45°	45°	3.5
063	36	8	50	82(112)	10	6	M8x14(n=8)	150	115	11(n=4)	180	142	8(8)	6	28.3(31.3)	21.5	M6	45°	45°	5.4
075	40	10	60	111	13	6	M8x14(n=8)	165	130	14(n=4)	200	170	8(10)	8	31.3(38.3)	27.0	M8	45°	45°	7.9
090	45	11	70	111	13	6	M10x18(n=8)	175	152	14(n=4)	210	200	10(10)	8	38.3(41.3)	27.0	M8	45°	45°	11.6
110	50	14	85	131	15	6	M10x18(n=8)	230	170	14(n=8)	280	260	12	8	45.3	31.0	M10	45°	45°	35
130	60	15	100	140	15	6	M12x21(n=8)	255	180	16(n=8)	320	290	14	8	48.8	33.0	M10	45°	22.5°	46.5
150	70	18	120	155	15	6	M12x21(n=8)	255	180	16(n=8)	320	290	14	10	53.8	38	M12	45°	22.5°	84

Motor connection for NM RV reducer

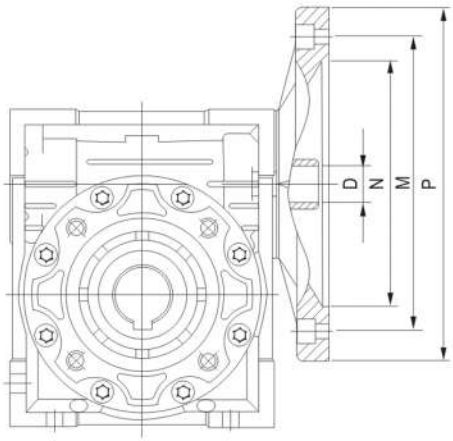

	PAME	N		M		P		7.5	10	15	20	25	30	40	50	60	80	100
	IEC	B5	B14	B5	B14	B5	B14	D										
RV025	56B14	-	50	-	65	-	80	9	9	9	9	-	9	9	9	9	-	-
RV 030	56B5/B14	80	50	100	65	120	80	9	9	9	9	9	9	9	9	9	9	-
	63B5/B14	95	60	115	75	140	90	11	11	11	11	11	11	11	11	-	-	-
RV 040	56B5	80	-	100	-	120	-	-	-	-	-	-	-	-	9	9	9	9
	63B5/B14	95	60	115	75	140	90	11	11	11	11	11	11	11	11	11	11	11
	71B5/B14	110	70	130	85	160	105	14	14	14	14	14	14	14	-	-	-	-
RV 050	63B5	95	-	115	-	140	-	-	-	-	-	-	-	11	11	11	11	11
	71B5/B14	110	70	130	85	160	105	14	14	14	14	14	14	14	14	14	14	-
	80B5/B14	130	80	165	100	200	120	19	19	19	19	19	19	19	-	-	-	-
RV 063	71B5/B14	110	70	130	85	160	105	-	-	-	-	-	-	14	14	14	14	14
	80B5/B14	130	80	165	100	200	120	19	19	19	19	19	19	19	19	19	19	19
	90B5/B14	130	95	165	115	200	140	24	24	24	24	24	24	-	-	-	-	-
RV 075	80B5/B14	130	80	165	100	200	120	-	-	-	-	-	19	19	19	19	19	19
	90B5/B14	130	95	165	115	200	140	24	24	24	24	24	24	24	-	-	-	-
	100B5/B14	180	110	215	130	250	160	28	28	28	-	-	-	-	-	-	-	-
	112B5/B14	180	110	215	130	250	160	28	-	-	-	-	-	-	-	-	-	-
RV 090	80B5/B14	130	80	165	100	200	120	-	-	-	-	-	-	-	19	19	19	19
	90B5/B14	130	95	165	115	200	140	-	-	-	-	24	24	24	24	24	-	-
	100B5/B14	180	110	215	130	250	160	28	28	28	28	28	28	-	-	-	-	-
	112B5/B14	180	110	215	130	250	160	28	28	28	28	-	-	-	-	-	-	-
RV 110	90B5	130	-	165	-	200	-	-	-	-	-	-	-	-	24	24	24	24
	100B5	180	-	215	-	250	-	28	28	28	28	28	28	28	28	28	-	-
	112B5	180	-	215	-	250	-	28	28	28	28	28	28	-	-	-	-	-
	132B5	230	-	265	-	300	-	38	38	38	38	-	-	-	-	-	-	-
RV 130	90B5	130	-	165	-	200	-	-	-	-	-	-	-	-	-	-	24	24
	100B5	180	-	215	-	250	-	-	-	-	-	-	-	28	28	28	28	28
	112B5	180	-	215	-	250	-	28	28	28	28	28	28	28	28	28	-	-
	132B5	230	-	265	-	300	-	38	38	38	38	38	38	38	-	-	-	-
RV 150	112B5	180	-	215	-	250	-	-	-	-	-	-	-	-	28	28	28	28
	132B5	230	-	265	-	300	-	-	-	-	38	38	38	38	38	-	-	-
	160B5	250	-	300	-	350	-	42	42	42	42	42	-	-	-	-	-	-

Allowed radial loading force on output shaft of deducer(N)

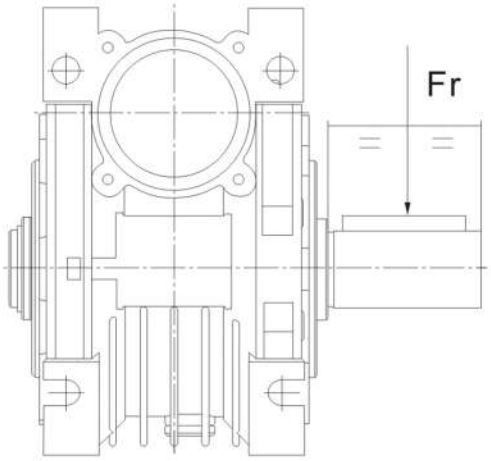

i	n_2	RV025	RV030	RV040	RV050	RV063	RV075	RV090	RV110	RV130	RV150
7.5	186	500	691	1325	1829	2378	2799	3098	3908	5112	6960
10	140	550	758	1454	2007	2609	3072	3400	4288	5610	7660
15	94	630	868	1665	2298	2988	3518	3893	4910	6424	8770
20	70	690	954	1829	2525	3283	3865	4277	5395	7057	9650
25	56	–	1033	1981	2735	3556	4187	4633	5844	7645	10400
30	47	790	1088	2087	2881	3745	4410	4880	6155	8052	11050
40	35	870	1204	2309	3188	4145	4880	5401	6812	8912	12160
50	28	940	1296	2485	3431	4461	5252	5812	7331	9590	13100
60	24	1000	1381	2649	3658	4756	5599	6196	7815	10224	13920
80	18	–	1516	2907	4014	5218	6144	6799	8576	11219	15320
100	14	–	–	3142	4338	5639	6639	7348	9268	12124	16500

Above table is the allowed loading force on the midpoint of output shaft.
When the reducer is with double output shafts,the resultant radial power at the edge of shaft should not exceed the values specified as in above table.
The max allowed axoal thrust is 1/5 of radial force while the radial force and axial force effected together.

Extension worm shaft (S) dimensions

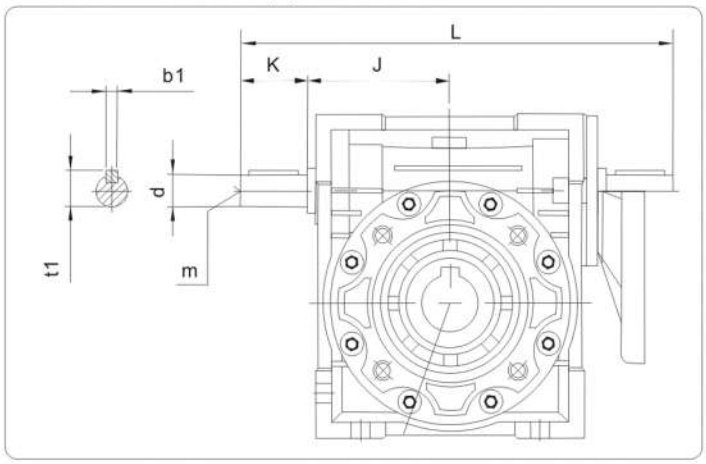

	J	d(j6)	K	L	m	b1	t1
030	45	9	20	136	-	3	10.2
040	53	11	23	165	-	4	12.5
050	63	14	30	198	M6	5	16
063	75	19	40	245	M6	6	21.5
075	90	24	50	295	M8	8	27
090	108	24	50	333	M8	8	27
110	135	28	60	397	M10	8	31
130	155	30	80	477	M10	8	33
150	175	35	80	530	M12	10	38

Output shaft (A1, A2) dimensions

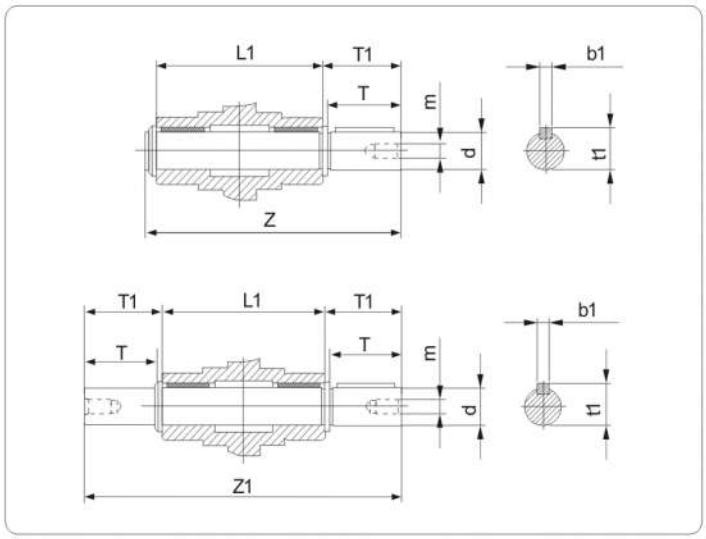

	d(h6)	T	T1	L1	Z	Z1	m	b1	t1
025	11	23	25.5	50	81	101	–	4	12.5
030	14	30	32.5	63	102	128	M6	5	16
040	18	40	43	78	128	164	M6	6	20.5
050	25	50	53.5	92	153	199	M10	8	28
063	25	50	53.5	112	173	219	M10	8	28
075	28	60	63.5	120	192	247	M10	8	31
090	35	80	84.5	140	234	309	M12	10	38
110	42	80	84.5	155	249	324	M16	12	45
130	45	80	85	170	265	340	M16	14	48.5
150	50	82	87	200	297	374	M16	14	53.5

Torque arm (B) dimensions

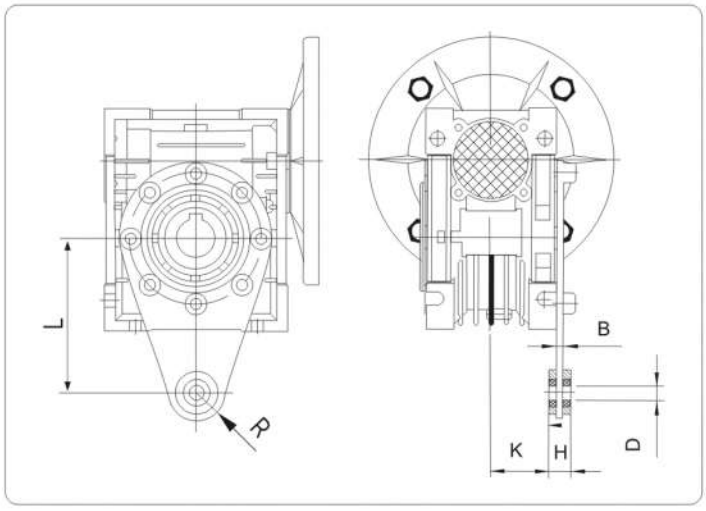

	L	H	K	D	R	B
025	70	14	17.5	8	15	4
030	85	14	24	8	15	4
040	100	14	31.5	10	18	4
050	100	14	38.5	10	18	4
063	150	14	49	10	18	6
075	200	25	47.5	20	30	6
090	200	25	57.5	20	30	6
110	250	30	62	25	35	6
130	250	30	69	25	35	6
150	250	30	84	25	35	6

UD(L) SERIES PLANET CONE-DISK STEPLESS SPEED VARIATOR

Brif Introduction of UD(L) Series Planet Cone-Disk Stepless Speed Variator

UD(L) series planet cone-disk stepless speed variator merges domestic and overseas advanced technique and craftsmanship. It chooses high-grade material of superior roces-sing. It's made of high-quality aluminium alloy diecast into forming. It has merits such asbeautiful appearance, small volume, light weight, high transmission efficiency, quick heat dissipation, low noise, flexible installation, convenient usage, long life etc.

UD(L) series planet cone-disk stepless speed variator maybe combined with various speed reducers to fulfill steeples speed variation, large speed-change scope, high speed-regulative precision. It maybe carried out during operation.

It is widely applicable in foodstuffs, ceramics, packing, chemicals, pharmacy and various automatic production line, conveyor lines, assembly lines which need speed-regualtion to fulfation power drive & control,

Mood & Mark

UD — Code of planetary cone steples variator

L — Aluminium alloy casing, and no mark means cast iron casing

0.75 — Relecant motor power.

B5 — Installation position Code.

Structure & Principle

The main drive components of planet cone-disk stepless speed variator consist of innerplanetary oebit 10, 13, planeetary wheel 8, outer planetary orbit 5, 9 and compression devicergulating orbit 2(As table 1). Electric motor shaft is input shaft. While driving inner planetary orbit to rotate, the inner planetary orbit tightly clamps planet wheel on both sidesunder actions of butterfly spring 11 to actuate planet wheel by frictional force. In the meantime of planet wheel's rotation, it makes revolution round inner palnetary orbit. It's revolution motion is transmitted by planet wheel shaft to output shaft through planet support.

While adjusting its speed, rotate operating handwheel to make movable outer planetary orbit 5 swing, make planet wheel inward(quiker) or outward(slower) moving through compression device in order to change the contact radius between planet wheel and inner palnetary orbit. That is change planet wheel's rotation & revolution speed. The Revolution motion changed in this way transmitting to output shaft becomes stepless speed variator output.

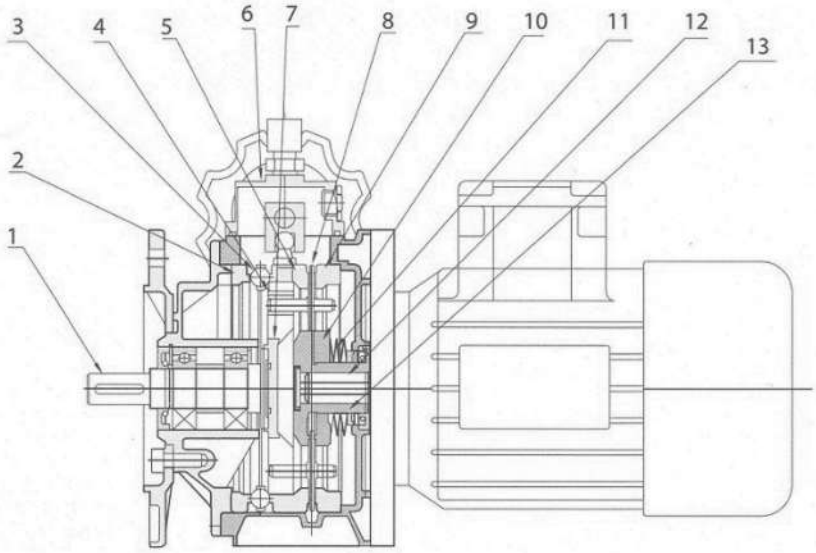

1.	Output Shaft
2.	Regulatiing Orbit
3.	Ball Ring
4.	Slide Block
5.	Moving Outer Planetary Orbit
6.	Operating Box
7.	Planet Support
8.	Planet Wheel
9.	Fixed Out Planetary Orbit
10.	Butterfly Spring
11.	Electric Motor Shaft
12.	Fixed Inner Planetary Orbit

UD(L) Performance Parameter

Power	Model	i	n2 r/min	M2 N.M
0.12kw	UDL0.12	1.6 ~ 8.2	850 ~ 170	1 ~ 2
0.18kw	UDL0.18	1.6 ~ 8.2	850 ~ 170	1.5 ~ 3
0.25kw	UDL0.25	1.4 ~ 7	1000 ~ 200	2 ~ 4
0.37kw	UDL0.37	1.4 ~ 7	1000 ~ 200	3 ~ 6
0.55kw	UDL0.55	1.4 ~ 7	1000 ~ 200	4 ~ 8
0.75kw	UDL0.75	1.4 ~ 7	1000 ~ 200	6 ~ 12
1.0kw	UDL1.1	1.4 ~ 7	1000 ~ 200	9 ~ 18
1.5kw	UDL1.5	1.4 ~ 7	1000 ~ 200	12 ~ 24
2.2kw	UDL2.5	1.4 ~ 7	1000 ~ 200	18 ~ 36
3.0kw	UDL3.0	1.4 ~ 7	1000 ~ 200	24 ~ 48
4.0kw	UDL4.0	1.4 ~ 7	1000 ~ 200	32 ~ 64
5.5kw	UDL5.5	1.4 ~ 7	1000 ~ 200	44 ~ 88
7.5kw	UDL7.5	1.4 ~ 7	1000 ~ 200	60 ~ 120
11kw	UDL11	1.4 ~ 7	1000 ~ 200	88 ~ 176

Installation Position Diagram

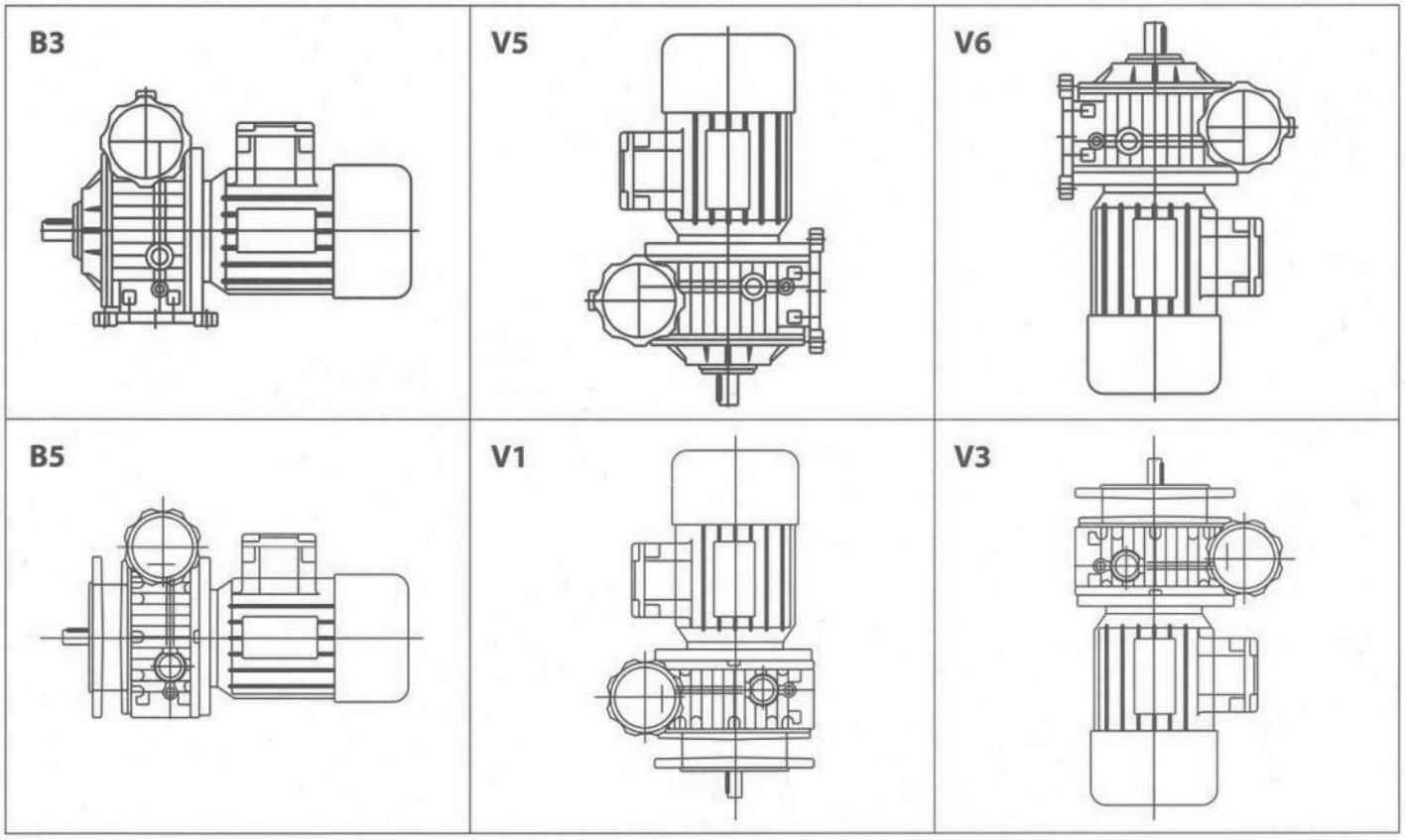

UD(L) Outline & Installation Sizes

	A0	A1	D1(J6)	B0	B	H	I	I1	K	L	M2	O1	VF	VL	VR	VR1	VS	Z	b	f	t
UDL0.12	105	17.5	11	110	23	80	145	120	87.5	135.5	71	9	111	78	110	110	75	10	4	-	12.5
UDL0.18																					
UDL0.25	104	20	14	120	30	93	149	125	104	104	96	9	123	90	110	110	75	10	5	M6	16
UDL0.37																					
UDL0.55	125	26	19	160	40	113	190	150	125.5	179	135	11	140	107	120	120	90	15	6	M6	21.5
UDL0.75																					
UDL1.1	140	95	24	180	50	125	230	170	154	219	130	13	144	127	135	135	90	18	8	M8	27
UDL1.5																					
UDL2.2	230	25	28	245	60	150	300	270	191	298	190	14	188	151	166	166	110	25	8	M8	33
UDL3.0																					
UDL4.0																					
UDL5.5	250	33	38	315	70	200	365	290	210	365	245	18	239	192	194	166	110	30	10	M10	38
UDL7.5																					
UDL11	350	50	50	350	110	224	455	420	308	455	285	20	301	254	226	-	250	45	14	M12	53.5

B3 - Foot - Mounted

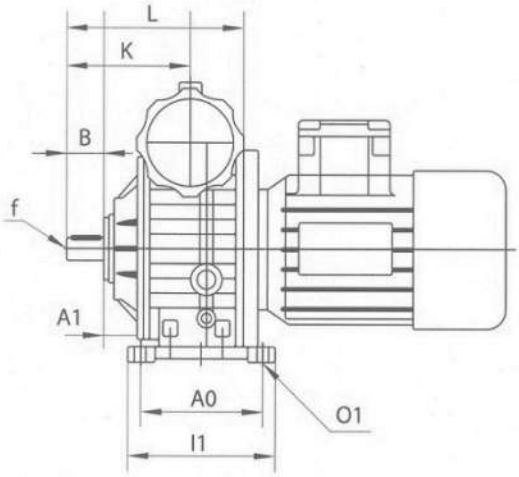

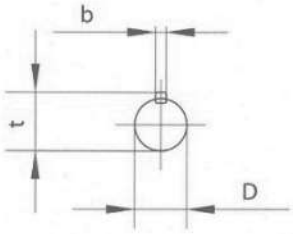

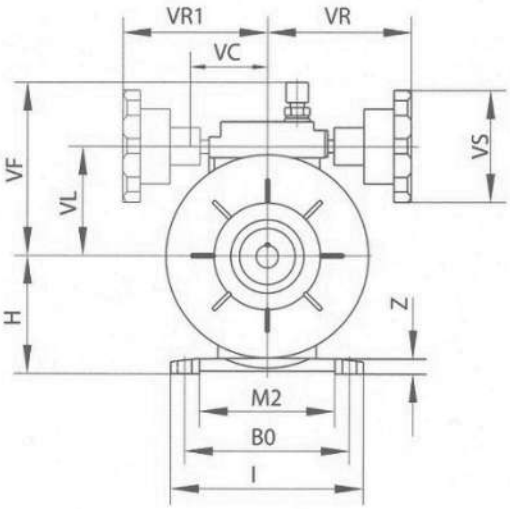

UD(L) Performance Parameter

	A0	D1(J6)	B0	B	G	G3	H	I	M	N	O	O1	P	T	K	VF	VL	VR	VR1	VS	b	f	t
UDL0.12	50	11	60	23	112.5	64.5	70	75	115	95	9	Φ7	140	3.5	46	111	78	110	110	75	4	-	12.5
UDL0.18																							
UDL0.25	40	14	77	30	110	93	80	90	130	110	9	Φ9	160	3.5	53	123	90	110	110	75	5	M6	16
UDL0.37																							
UDL0.55	58	19	84	40	139	113	100	98	165	130	11	Φ9	200	3.5	60	140	107	120	120	90	6	M6	21.5
UDL0.75																							
UDL1.1	-	24	-	50	167	125	116	230	165	130	13	-	200	3.5	-	144	127	135	135	90	8	M8	27
UDL1.5																							
UDL2.2	-	28	-	60	207	150	135	270	215	180	15	-	250	4	-	188	151	166	166	110	8	M8	33
UDL3.0																							
UDL4.0																							
UDL5.5	-	38	-	70	244	131	200	-	265	230	15	-	300	5	-	239	192	194	-	110	10	M10	38
UDL7.5																							
UDL11	-	50	-	110	368	258	244	-	350	300	19	-	400	5	-	301	254	266	-	250	10	M12	53.5

B5 - Flange - Mounted

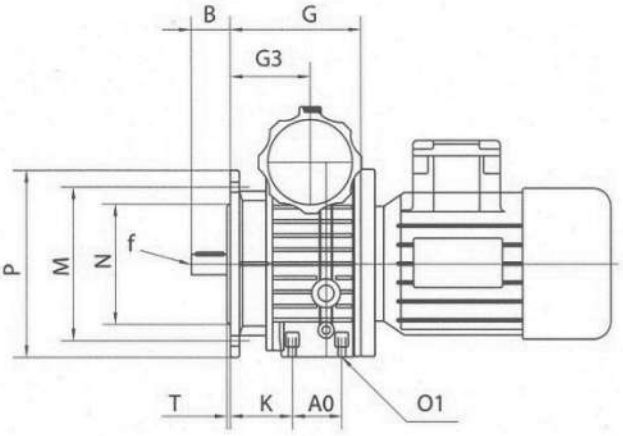

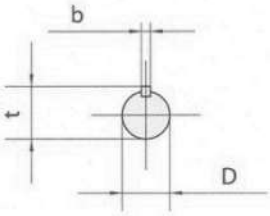

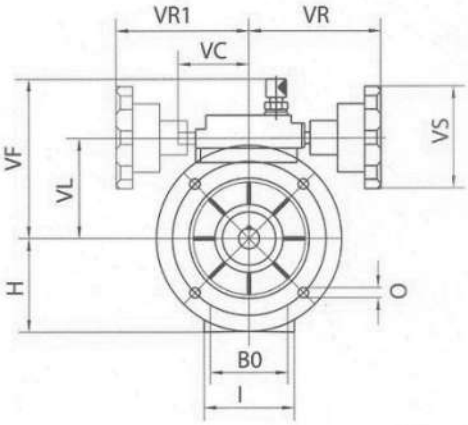

OPERATION & MAINTENANCE

Choice of Lubricant

		UDL Series Speed Variator	NMRV Series Worm-Gear Speed Reducer				PC Series Helical Unit
			NMRV 025-090	NMRV 110-130			
	Lubricant	Synthetic	Synthetic	Synthetic	Synthetic		Synthetic
	Ambient Temperature	-25°C~+40°C	-25°C~+50°C	-25°C~+50°C	-5°C~+40°C	-15°C~+25°C	-25°C~+50°C
ISO		VG32	VG320	VG320	VG460	VG220	VG320
Used In Interial		Ub-3	WA460	WA460			CKC150
		TRANMISSION V.E A.T.F. DEXRON FLUID	TELIUM VSF	MELLANA OIL 320	MELLANA OIL 460	MELLANA OIL 220	TELIUM VSF
		A.T.F. DEXRON	TIVELA OIL S C320	OMALA OIL 320	OMALA OIL 460	OMALA OIL 220	TIVELA OIL SC320
		A.T.F. DEXRON	BLASIA S320	BLASIA S320	BLASIA 460	BLASIA 220	BLASIA 320
	Esso	A.T.F. DEXRON	S220	S220	SPARTAN EP460	SPARTAN EP220	S220
	Mobil	A.T.F. 220	GLYGOYLE 30	MOBIL GEAR 320	MOBILE GEAR 634	GLYGOYLE 30	GKYGOYLE 30
	Castrol	TQ. DEXRON.II	ALPHASYN PG 320	ALPHASYN PG 320	ALPHA MAX 460	ALPHA MAX 220	ALPHASYN PG 320
	BP	AUTRAN DX	ENERGOL SG-XP320	ENERGOL SG-XP320	ENERGOL SG-XP460	ENERGOL SG-XP220	ENERGOL SG-XP320

Quantity of Oil In Liters								
NMRV	030	040	050	069	075	090	110	130
B3	0.04	0.08	0.15	0.3	0.55	1	3	4.5
B8							2.2	3.3
B6 - B7							2.5	3.5
V5 - V6							3	4.5

Quantity of Oil In Liters					
UD	0.18	0.37	0.75	1.5	2.2
B3	0.25	0.35	0.45	0.75	1.0
V3	0.4	0.5	0.6	1.0	1.5

CMP
Century motors Producer

MOTOR SERIES

R SERIES GEAR REDUCER

INVERTER SERIES

CMP - A Global Promise !

HEAD OFFICE - AUSTRALIA

CMP ELECTRIC MOTOR (AUSTRALIA) PTY LTD
12 Treetops Avenue South Penrith
2750 Sydney N.S.W
email : sales@cmpmotor.com

www.cmpmotor.com

MALAYSIA
CMP ELECTRIC MOTOR(ASIA PACIFIC) SDN BHD
No.2-28, Jalan Puteri 4/8,Bandar Puteri, 47100 Puchong,
Selangor,Malaysia.
email: louis.lim@cmpmotor.com

NEWTON AUTOMATION (M) SDN BHD
No.22,Jalan Permata 9A/KS09,Taman Perindustrian Air Hitam,41200 Klang,Selangor ,Malaysia.
email: sales@newton-group.net

INDONESIA
PT CMP INDONESIA
Kapuk Ecopark Unit B1,Jl. Kapuk Kamal Raya No.45RT.
012 RW.001 Kel.Kamal Muara Kec.Penjaringan Jakarta
Utara DKI,Jakarta 14470, Indonesia.
email: marketing@cmpindonesia.com

SINGAPORE
RPM ELECTRICAL ENGINEERING PTE LTD
No 1, Joo Koon Way, Gate 2,Singapore 628942.
email: rpmeepl@singnet.com.sg

THAILAND
HINERGY CO.,LTD
1213/439, Noble Tara Village,Ekamai Rama 9, Ladprao 94 Plubpla Wangthonglang ,Bangkok 10310 ,Thailand.
email: sales@hinergy.co.th

PHILIPPINES
email: john.anthony@cmpmotor.com

HONG KONG & MACAO CHINA
A-TECH ENGINEERING CO.,LTD
Unit 2404,24/F., World-Wide House,19 Des Voeux Road, Central, 999077Hong Kong.
email: darren@a-techeng.com

KOREA
PSD TECHNOLOGIES.,INC.
#301,Hyudai I Valley, 31, Galmachi-ro 244 beon-gil, Jungwon-gu, Seongnam-si, Gyeonggi-do, South Korea 462-714.
email: johnahn@psdtech.com

© 2021 Created by CMP ELECTRIC MOTOR (AUSTRALIA) PTY LTD

The contents of this album are not legally binding and are for informational purposes only.
Product specifications are subject to change without prior notice. All products sold are subject to change without prior notice.