Gearhead's specs of universal type

■ Dimension of shaft Ø8、Ø10、Ø12、Ø15

Model：6A□N with Shaft Ø8

Unit：mm

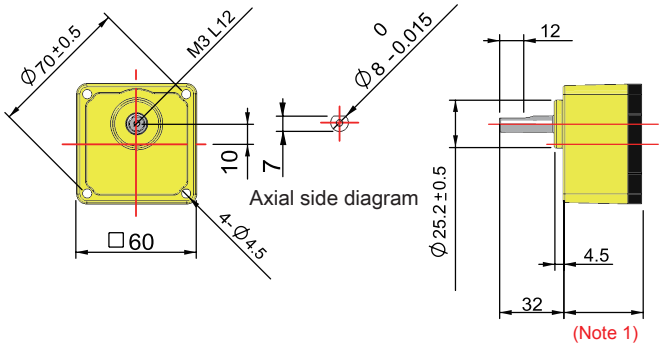

＊(Note 1)

6A□N Gearhead Length/Weight		
Gearhead's model	Length(mm)	Weight(g)
6A3N~6A100N	39.5 ± 0.5	400
6A120N~6A360N	43.5 ± 0.5	440

Model：8A□N with Shaft Ø10

Unit：mm

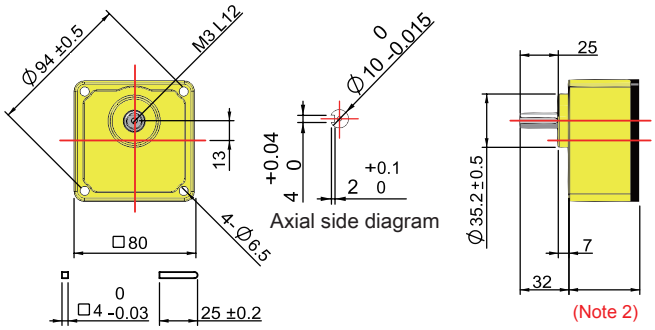

＊(Note 2)

8A□N Gearhead Length/Weight		
Gearhead's model	Length(mm)	Weight(g)
8A3N~8A100N	46.5 ± 0.5	830
8A120N~8A360N	50.5 ± 0.5	890

Model：9A□N with Shaft Ø12

Unit：mm

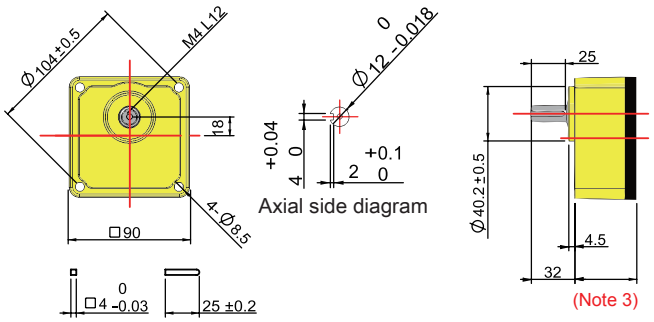

＊(Note 3)

9A□N Gearhead Length/Weight		
Gearhead's model	Length(mm)	Weight(g)
9A3N~9A20N	45.5±0.5	1120
9A25N~9A100N	58.5±0.5	1470
9A120N~9A360N	64.5±0.5	1560

Model：9A□U with Shaft Ø15

Unit：mm

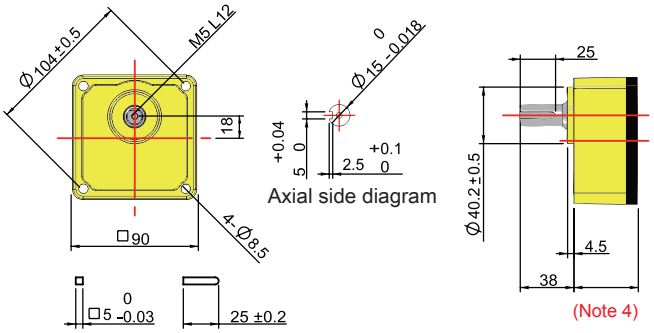

＊(Note 4)

9A□U Gearhead Length/Weight		
Gearhead's model	Length(mm)	Weight(g)
9A3U~9A20U	45.5±0.5	1150
9A25U~9A100U	58.5±0.5	1500
9A120U~9A360U	64.5±0.5	1590

Gearhead's specs of standard type

■ Dimension of shaft Ø10、Ø15、Ø18

Model：6A□ with Shaft Ø10

Unit：mm

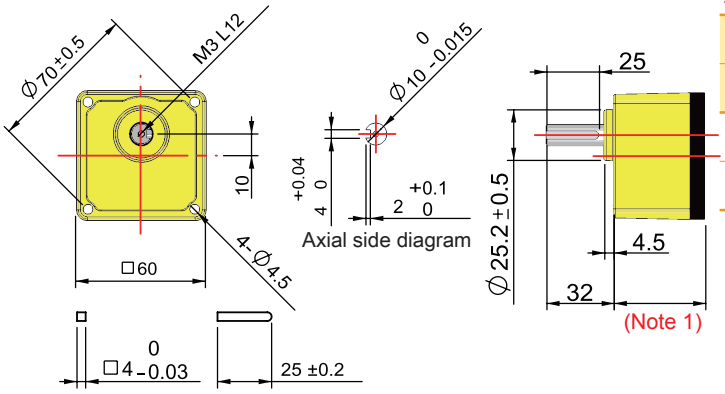

＊(Note 1)

6A□ Gearhead Length/Weight		
Gearhead's model	Length(mm)	Weight(g)
6A3~6A100	39.5	400
6A120~6A360	43.5	440

Model：8A□ with Shaft Ø15

Unit：mm

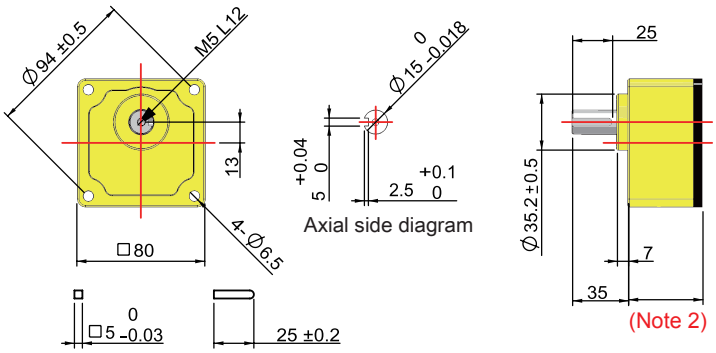

＊(Note 2)

8A□ Gearhead Length/Weight		
Gearhead's model	Length(mm)	Weight(g)
8A3~8A100	46.5	880
8A120~8A360	50.5	940

Model：9A□with Shaft Ø18

Unit：mm

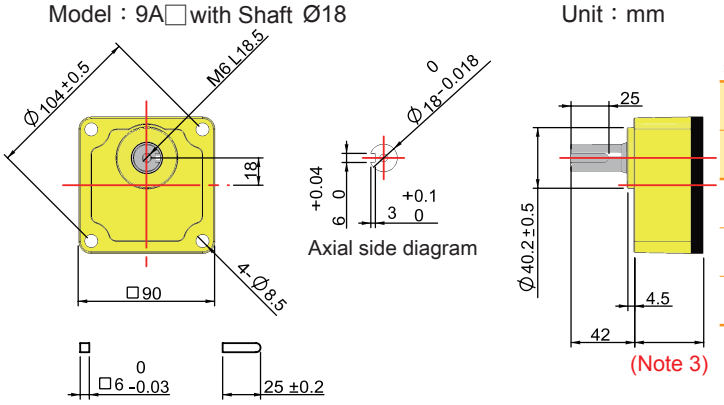

＊(Note 3)

9A□ Gearhead Length/Weight		
Gearhead's model	Length(mm)	Weight(g)
9A3~9A20	45.5	1170
9A25~9A100	58.5	1520
9A120~9A360	64.5	1610

Connection of Motor and Gearhead

■ Please install the Motor and Gearhead as the following diagram.When installing the Motor with Gearhead please avoid the gear part of Motor shaft to collided the metal plate or gear.

(Step 1) The distance between the motor and Gearhead around 35mm,45°included angle.

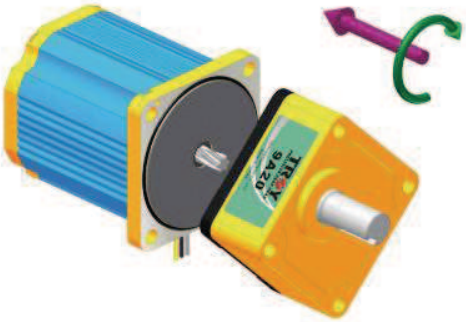

(Step 2) Gearhead connected with Motor in clockwise direction,35°included angle.

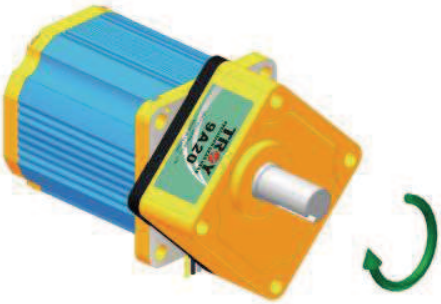

(Step 3) Gearhead face to the Motor flange and rotated in clockwise direction and make sure that Motor and Gearhead connected already.

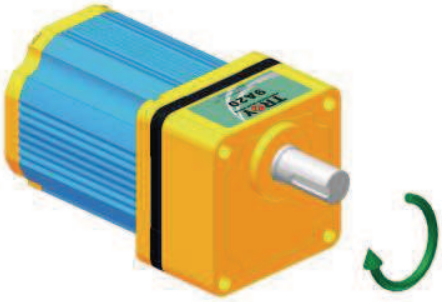

(Step 4) Using screws x 2 pcs(attachment) to secure the Motor and Gearhead.

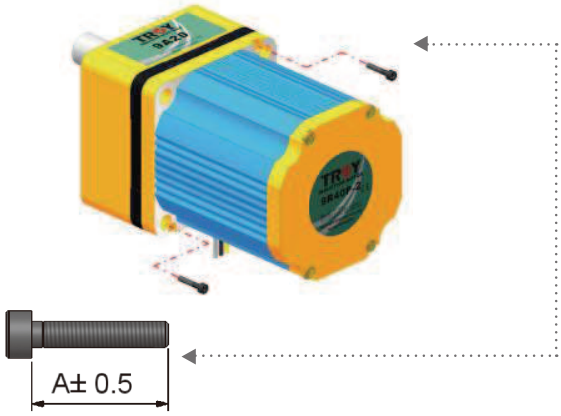

Model	Screw specs	Length(mm)
6A□(N)	M2P0.4	8
8A□(N)	M3P0.5	8
9A□(N)	M3P0.5	12

◎Mounting small screws are included with gearhead

(Step 5)『Installation of mounting plate』：Securing the Motor and Gearhead with screws x 4pcs.

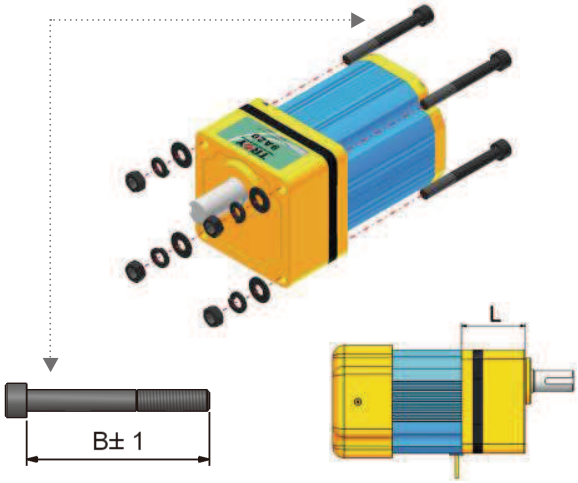

Model	Screw specs	Screw Length (B)mm	Gearhead+ Motor bracket (L)mm
6A3(N)~6A100(N)	M4P0.7	60	47.5
6A120(N)~6A360(N)		70	51.5
8A3(N)~8A100(N)	M6P1.0	70	54.5
8A120(N)~8A360(N)		75	58.5
9A3(N)~9A20(N)	M8P1.25	75	55.5
9A25(N)~9A100(N)		90	68.5
9A120(N)~9A360(N)		95	74.5

◎Mounting screws are included with gearhead

Product number code

Motor

9 I 60 P □ □ - 2 □ E

Motor frame size
6 : 60mm sq.
8 : 80mm sq.
9 : 90mm sq.

I : Induction Motor
R : Reversible Motor
T : Torque Motor

Motor output
3 : 3W
6 : 6W
10 : 10W
20 : 20W
25 : 25W
40 : 40W
60 : 60W
90 : 90W
135 : 135W

S : Round shaft
P : Pinion shaft

None : Lead wire type
B : Terminal box type
U : Speed control-Unit type
V : Speed control-Component package type

F : Independent fan type

M : Electromagnetic braketype

None : 60Hz
E : 50Hz

Power input
1 : Single phase AC110~115V 60Hz
2 : Single phase AC220~230V 60Hz
2□E : Single phase AC230V 50Hz
3 : 3 phase AC230V 60Hz
3□E : 3 phase AC230V 50Hz
8 : 3 phase AC380V 60Hz
8E : 3 phase AC380V 50Hz

Gearhead

9 A 5 U

Motor frame size
6 : 60mm sq.
8 : 80mm sq.
9 : 90mm sq

Gearhead for AC induction Motor

Gear ratio

3 : 1/3	18 : 1/18	100 : 1/100
3.6 : 1/3.6	20 : 1/20	120 : 1/120
5 : 1/5	25 : 1/25	150 : 1/150
6 : 1/6	30 : 1/30	180 : 1/180
7.5 : 1/7.5	36 : 1/36	200 : 1/200
9 : 1/9	50 : 1/50	250 : 1/250
10 : 1/10	60 : 1/60	300 : 1/300
12.5 : 1/12.5	75 : 1/75	360 : 1/360
15 : 1/15	90 : 1/90	

None : 6A□series with shaftØ10mm
8A□series with shaftØ15mm
9A□series with shaftØ18mm
N : 6A□series with shaftØ8mm
8A□series with shaftØ10mm
9A□series with shaftØ12mm
U : 9A□series with shaftØ15mm

Controller

T S □ 3 2 - □ - □

TROY

U : Speed Controller-Unit type
S : Speed Controller-Component package type
E : Speed Controller-Component package type (With internal speed control function)

None : Standard type
D : With speed indicator (Only for TU series)

Drive current
2 : 2A
3 : 3A
5 : 5A

Power input
1 : Single phase AC100~115V 50/60Hz
2 : Single phase AC200~230V 50/60Hz

P : Standard type (For TS1□ series)

None : Standard type
HR : High response type (For TU3□series)
SSSD : Slow start / Slow down (For TS3□,TS1□,series)