XC938

WHEEL LOADER

1. Scan the QR code to follow "XCMG Loading Machinery"
2. Click "the "Loader King" in the lower left corner to obtain more product details after registration

Description

- As a new generation of special lifting product launched by XCMG Construction Machinery Co., Ltd., XC938 is an innovative wheel loader developed and designed based on extensive market and technical research. It features not only high performance and streamlined appearance, but also greatly-improved reliability, safety, comfort and maintainability compared with the previous generation products.
- XC938 wheel loader integrated with a platform is suitable for all kinds of operating conditions, and can be optionally configured with triple hydraulic system, pilot hydraulic control, XCMG wet axle, 1-row radiator, oil bath, reversing camera, centralized lubrication, operating linkage for high dumping and super-high dumping, 1.8-3.0 m^3 series buckets, tongs, grass clamp, fog-mouth clamp, spreader, snow shovel and quick tools, etc.
- With high adaptability to various operating conditions, XC938 wheel loader is mainly used for excavation and loading or short-distance transfer of materials in sand and gravel quarries, coal yards, agriculture and animal husbandry, ports, wharves, etc., as well as stripping of surface soil, and cleaning of construction and domestic waste.

Features

- WEICHAI China 2 turbocharged engine, integrated with three-stage desert air filter suitable for dusty conditions, and mechanical pump with simple structure to ensure high reliability and excellent power performance.
- In addition to high-torque drive axles meeting rigid requirements for high-intensity and high-load operations, electronically-controlled fixed shaft shift transmission designed with 4 forward gears and 3 reverse gears, featuring outstanding reliability, long service life, high transmission efficiency, easy shifting, and smooth engagement.
- Planetary power-shift transmission connected with a large-capacity torque converter, designed with multiple gears (2 forward and 1 reverse) to meet the speed requirements under different operating conditions; reinforced drive axle specially designed for construction machinery to ensure stable quality, reliable performance and easy maintenance.
- Integrated with sophisticated and reliable single-pump shunt and load-sensing full hydraulic steering technology, improving the lifting capacity by increasing the pressure of the operating system up to 20.5MPa, and reducing the total cycle time through the design of high pressure and small displacement. Integrated distribution valve with manually-operated actuator, improving the system efficiency, and reducing energy and fuel consumption.
- Innovative micro-pressurized cab designed with large space, wide field of view and excellent sealing in order to provide a spacious, bright and well-closed room with fully-covered aesthetic interior for the operator working in the cab; lower noise level around the operator's ears due to sound-proof structure of the cab and hood, creating comfortable and quiet environment for the operator; large-arc hyperboloid glass featuring a wider view of field and minimized blind areas around the machine, enabling the operator to easily observe the rear of the machine and the edges of the bucket, and improve the productivity due to comfortable driving and operating experience.
- Inspection and maintenance of the machine to be carried out simply on the ground or platform, providing sufficient maintenance areas which are always accessible through three points to ensure the safety and convenience of maintenance and routine inspection activities. All maintenance points for oil level inspection, fuel, oil and grease filling, etc., are easily accessible, and the maintenance and replacement of air filter elements and electrical equipment can be carried out conveniently.

Main features

Advanced:

- High-torque supercharged engine combining advanced technology and excellent performance due to optimal power matching based on a power curve developed by XCMG, and meeting the requirements of China II emission standard.
- Specially developed and designed for transportation construction, municipal sanitation, sand and gravel quarries and other applications, and optimizing structural components by using the advanced finite element analysis (FEA) technology to reduce stress and improve performance.
- Integrated with optimally-matched hydraulic system to ensure outstanding performance in various operations; pipelines designed with dual sealing, i.e., 24° cones and O-rings, ensuring excellent performance which meets DIN standards.

Reliable:

- Configured with the largest fixed shaft transmission in the market and drivetrain system matched with XCMG heavy-duty drive axles as standard, featuring proven and mature technology to ensure reliable load capacity.
- Structural components optimized by using the finite element analysis (FEA) technology to reduce stress concentration, eliminate local weakness, and greatly improve reliability; adopting the robot-based welding technology to ensure uniform welds with a large depth and excellent fatigue resistance.
- Electrical and brake components properly arranged to in consideration of protection from sunshine, rain, pollution and other environmental factors, so as to improve the reliability of components.
- Drive shaft designed according to international standards, and fixing bolts with a larger-diameter distribution circle, ensuring excellent torsion resistance and adaptability to high-intensity, continuous and heavy-duty operations.
- All covering parts including the hood and cab made of high-quality steel profiled frame, which features high rigidity, light weight and excellent durability; hood skins fabricated by using the integral shaping technology in order to adapt to various bumpy operating conditions.

Energy-saving:

- Configured with turbocharged engine as standard, which is mechanically controlled like conventional products and less sensitive to diesel quality, enabling wider selection of oil products and improving the cost effectiveness.
- Optimized center layout of the machine to minimize the weight of the machine with increased tilting load and maximize the fuel efficiency.
- Perfect match between high-torque engine and high-pressure & small-displacement hydraulic system to ensure outstanding performance and less fuel consumption during operation.

Ultra-low cost of use

- XCMG dedicated engine and torque converter
- Lightweight operating unit
- Energy-saving cooling system

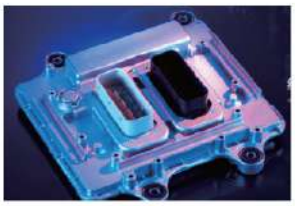

Main features

High efficiency:

- Three-element torque converter with high efficiency to maximize the utilization rate of engine power; large-displacement single-pump split-flow hydraulic system featuring large cylinder power and fast arm lifting to improve the loading speed and efficiency.
- A variety of bucket capacities designed according to different material densities, and buckets with optimized shape enabling easy insertion into material piles and higher fillability; combined with operating linkages designed for different dumping heights to ensure high-efficiency operation in various applications.
- Configured with fixed shaft transmission with 4 forward gears and 2 reverse gears, or optional planetary transmission with 2 forward gears and 2 reverse gear, ensuring reasonable speed distribution and high-efficiency operation whether it is heavy-duty excavation and loading or transfer to the site under no-load condition.

Comfortable:

- Luxury car-like cab equipped with high-performance aviation seat and large space to ensure safe and comfortable riding experience.
- All operating elements and buttons arranged within easy reach to enable convenient performance of various operations; fully-covered aesthetic interior creating the best operating environment in the cab.
- Full-viewing rear glass and high-mounted rear lights, to ensuring wide view of field and safe reversing.
- High-power heating and cooling air conditioner to be configured for the whole series as standard, which is suitable for all kinds of severe cold and hot conditions.

Convenient:

- Engine hood designed with frame structure and large flip-up side door with large opening angle, enabling easy inspection and maintenance of engine and radiator.
- Easy maintenance ensured due to centralized fuse box and centralized display of electrical system operating status.
- Hydraulic oil reservoir designed with independent-cavity oil return circuit to ensure easy maintenance.
- Optimized arrangement of all maintenance units, filling and discharge ports within easy reach to ensure simple operation.

Common special tools

Tool name	Parameter (mm)	Tool structure	Function and operation conditions
Paring clamp	Opening: 1825 Holding circle: 830 Width: 1875		Function: Loading, unloading and transportation of wood, boards and other materials. Main applications: Ports, docks, timber processing, forest farms, etc.
Three-tooth fog-mouth clamp	Opening:2560 Holding circle:1400 Width: 1780		Function: Loading, unloading and transportation of plates, wood blocks, sticks, branches and other materials. Main applications: Docks, timber processing, forest farms, paper mills, biomass power plants, etc.
Clamp (staggered)	Opening:1720 Holding circle:400 Width: 1950		Function: Loading, unloading and transportation of wood, boards and other materials. Main applications: Ports, docks, timber processing, forest farms, etc.
Pipe clamp	Opening: 1410 Holding circle: 50 Width:2026		Function: Loading, unloading and transportation of pipes, plates and other materials. Support multiple functions such as pairing clamp, staggered clamp and forks. Main applications: Oil fields, wood processing plants, etc.
Frog-mouth clamp	Opening:1580 Holding circle:580 Width: 1650		Function: Loading, unloading and transportation of wood, boards and other materials. Main applications: Ports, docks, timber processing, forest farms, etc.
Grass clamp	Opening: 2800 Holding circle: 1045 Width: 2198		Function: Loading, unloading and transportation of plates, wood blocks, sticks, branches and other materials. Main applications: Docks, timber processing, forest farms, paper mills, biomass power plants, etc.
Change fog-mouth clamp	Opening: 1580 Holding circle:580 Width: 1650		Function: Loading, unloading and transportation of wood, boards and other materials. Main applications: Ports, docks, timber processing, forest farms, etc.

Main Specifications

Dimensions

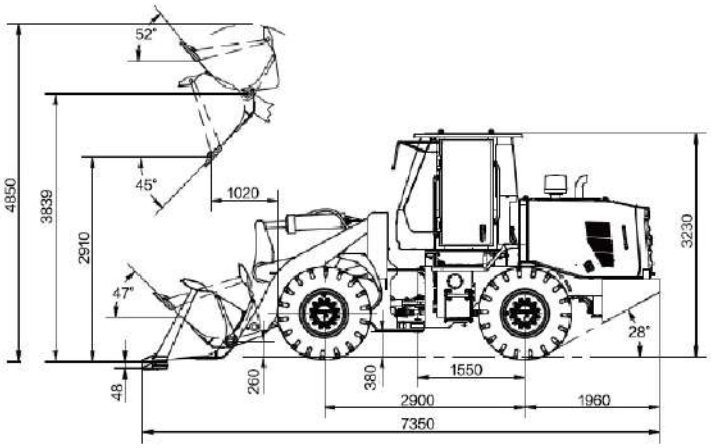

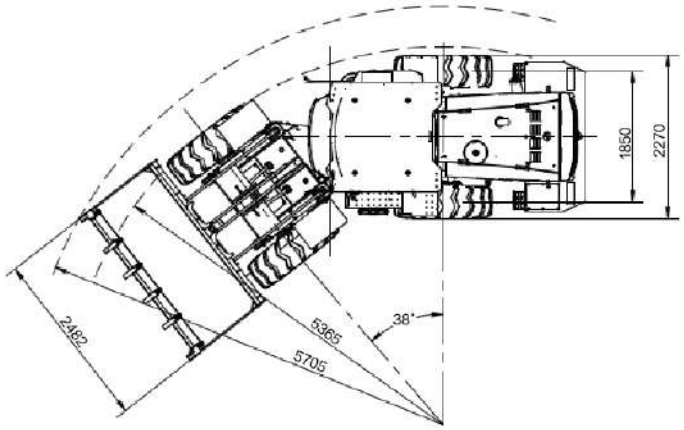

Specifications

Parameter	Parameter		Unit
	Standard arm	Small-height dumping	
Rated load	3500	3000	kg
Rated bucket capacity	1.8	1.8	m^3
Rated power	92	92	kW
Working mass	10400±200	10400±200	kg
Max breakout force	125±5	110±5	kN
Max tractive force	100±5	100±5	kN
Wheel base	2900	2900	mm
Wheelbase	1800	1800	mm
Dumping height	2930	3200	mm
Dumping range	1080	1085	mm
Boom lifting time	≤5.0	≤5.0	S
Total cycle time	≤9	≤9	S
Max gradeability	28	28	°
Max steering angle	38	38	°
Speed at Gear 1 (forward/reverse)	12/16	12/16	km/h
Speed at Gear 2 (forward/reverse)	38	38	km/h
Min ground clearance	365	365	mm
Overall dimensions	7350×2482×3220	7650×2482×3220	mm

System category	Specification	XC938
Engine	Brand and model	WEICHAI WP6G125E22
	Type	Inline, six-cylinder, water-cooled, turbocharged
	Displacement	6.75
	Emission standard	China Ⅱ
Gearbox	Type	Fixed shaft/planetary transmission
	Gears	Forward 4 reverse 3/ Forward 2 reverse 1
Drive axle	Brand and form	XCMG dry drive axle
Tyre	Standard specifications	17.5-25-12PR
Working hydraulic system	Type	Single-pump split-flow quantitative hydraulic system
	Operation mode	Pilot control
Steering hydraulic system	Type	Full hydraulic steering system
Brake System	Service brake	Air over hydraulic, caliper disc four-wheel brake
	Parking brake	Hand-pulled flexible shaft internal expanding brake
Air conditioner		Cooling and heating
Fuel/oil filling (for reference)	Diesel L	170
	Engine oil L	18
	Antifreeze L	35
	Drive axle oil L	2×15.5
	Hydraulic fuel L	155
	Brake fluid L	2

- The technology of XCMG backhoe loaders is subject to constant improvement and upgrading. In case the specifications or detailed appearance contained in this brochure differ from actual products, the latter shall prevail;
- XCMG reserves the right of final interpretation for the above. Our products may be modified without prior notice to users.

SOLID TO SUCCEED

MALAYSIA AUTHORISED DISTRIBUTOR

FINBOND HEAVY MACHINERY SDN BHD
199301026847 (281585-P)
No 7, Lot 66231 (PT50778)
Kampung Batu 13 1/2, Jln Kelang,
47100 Puchong, Selangor
Tel : +603-8061 1121 Email : marketing@finbond.com.my
Fax : +603-7832 3899

SCAN ME