[DSU-600C]

[IN-SWING DOOR]

[FRAMELESS GLASS DOOR APPLICATION]

DSU COVER BRACKET FOR FRAMELESS GLASS & FRAMELESS GLASS DOOR

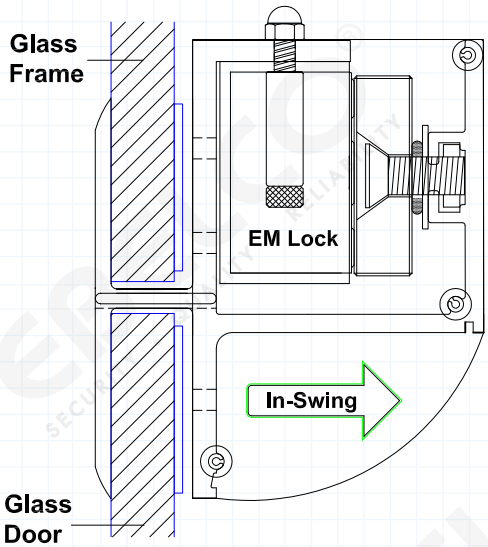

SPECIFICATIONS [UNIT = MM]

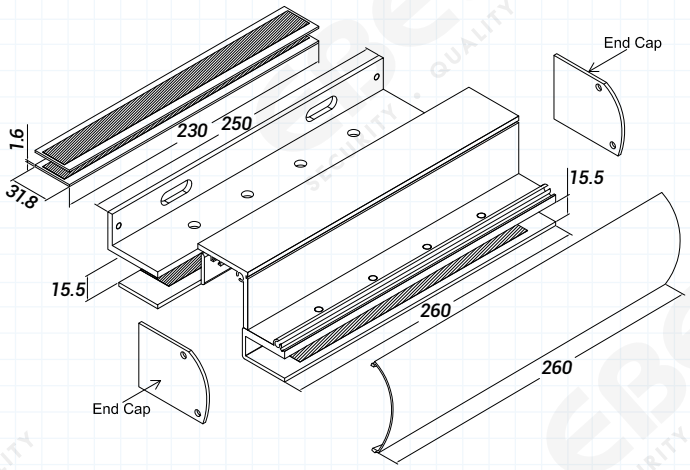

INSTALLATION METHOD

Notes

- *Suitable for frameless glass door thickness 10-12mm.*
- *Applicable for model EM Lock 600 & -RVS Series.*

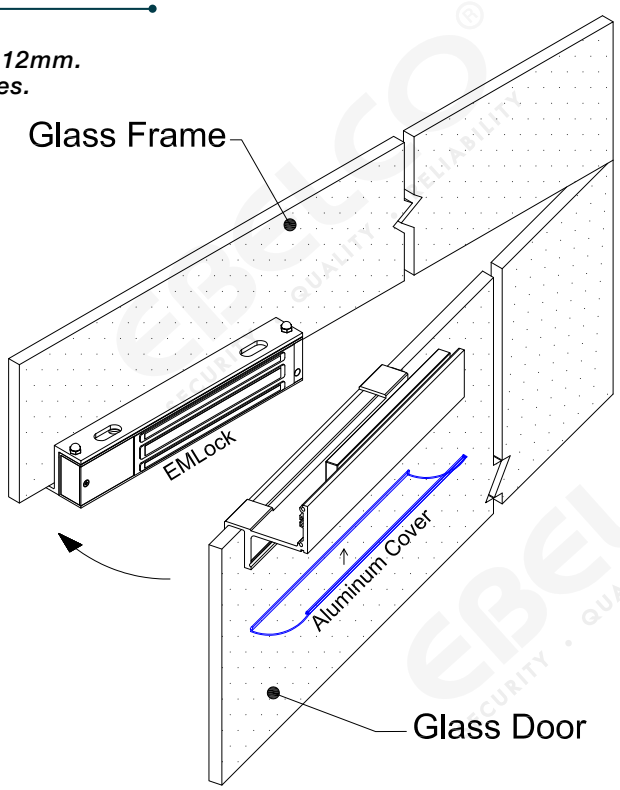

DISCLAIMER : *EISB reserve the right to change with any modifications or features or price without forewarning. All the information and specifications stated in this document are current at the time of publication.*

EBELCO INDUSTRIES SDN. BHD. 474704-V
16, Jalan TTC 26, Taman Teknologi Cheng,
75250, Melaka, Malaysia.
: [+606] 333 8855
: [+606] 333 8822
: www.ebelco.com
: enquiry@ebelco.com
WWW.EBELCO.COM